ORDER NO. BSD0103M003
D28

Service Manual

Sec. 1 *Operating Instructions & Instraiiation Manual*
Sec. 2 *Service Information*
Sec. 3 *Disassembly Procedures*
Sec. 4 *Electrical Adjustments*
Sec. 5 *Block Diagrams*
Sec. 6 *Schematic Diagrams*
Sec. 7 *Circuit Board Diagrams*
Sec. 8 *Exploded Views & Replacement Parts Lists*

DVCPRO 50

Non-Linear Editing System

AJ-DE97P

Refer to
BSD0103M901
DVCPRO MECHANISM
Version 2
for Mechanical Adjustment.

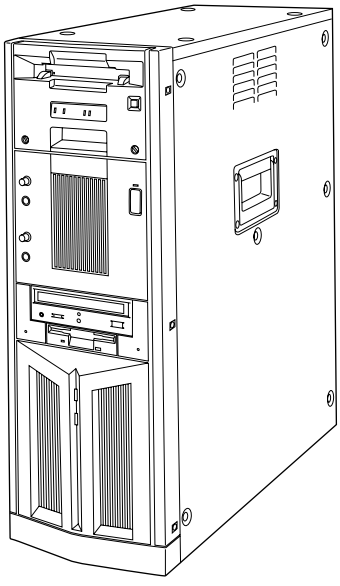

Panasonic

© 2001 Matsushita Electric Industrial Co., Ltd. All rights reserved.
Unauthorized copying and distribution is a violation of law.

⚠ WARNING

This service information is designed for experienced repair technicians only and is not designed for use by the general public.
It does not contain warnings or cautions to advise non-technical individuals of potential dangers in attempting to service a product.
Products powered by electricity should be serviced or repaired only by experienced professional technicans. Any attempt to service or repair the product or products deal with in this service manual by anyone else could result in serious injury or death.

Specifications

[GENERAL]

Power supply: 120V AC(±10%), 50Hz – 60 Hz
Rated current: 4.0 A

Ambient operating temperature:
41 °F to 95 °F, (5 °C to 35 °C)
Ambient operating humidity:
10 % to 80 % (no condensation)
Dimensions (W) × (H) × (D):
9 1/16″ × 25 1/4″ × 21 11/16″ (230 × 641 × 550 mm)
Weight:
99.22 lb (45.1 kg)
main unit only

[PC]

CPU:
X86 compatible CPU
Operating system:
Windows NT 4.0
Memory:
256 MB
System hard disk drive:
EIDE type
AV hard disk drive:
Video: 18 GB×4, Audio: 18 GB×1
Recording for a nominal duration of 140 minutes is possible. (With DVCPRO 50 format)
CD-ROM:
ATAPI specifications supported
Floppy disk drive:
3.5″

[VTR]

Recording format:
DVCPRO 50/DVCPRO format
Tape speed:
DVCPRO 50 (×2 speed)
: 135.280 mm/s
DVCPRO 50 (×1 speed)
: 67.640 mm/s
DVCPRO (×4 speed)
: 135.280 mm/s
Recording/playback time:
92 minutes :using AJ-5P92LP tape
(With DVCPRO 50 format)

[VIDEO]

Sampling frequency:
Y: 13.5 MHz
P_B/P_R: 6.75 MHz (4:2:2)
P_B/P_R: 3.375 MHz (4:1:1)
Quantizing:
8 bits/sample
Compression:
DVCPRO 50/DVCPRO

[AUDIO]

Sampling frequency:
48 kHz
Quantizing:
16 bits/sample
Number of channels:
4 channels (internal: 8 channels)

Specifications

[INPUT/OUTPUT CONNECTORS]

■ Video input connectors

Analog composite:
BNC×2 (loop-through configuration)
Analog component (Y, P_B, P_R):
BNC×3
Analog reference video:
BNC×2 (loop-through configuration)

■ Video output connectors

Analog composite:
BNC×2
Analog component (Y, P_B, P_R):
BNC×3
Analog composite monitor:
BNC×1 (with superimposed data)

■ Audio input connectors

Analog (CH1/CH2/CH3/CH4):
XLR×4 (high impedance)
0 dBu
Mic:
M6 (variable level)

■ Audio output connectors

Analog (CH1/CH2/CH3/CH4):
XLR×4 (low impedance)
0 dBu
Digital (CH1-2/CH3-4):
XLR×2, AES/EBU format
Monitor (L/R):
XLR×2 (low impedance)
0 dBu
Headphones:
M6 (variable level), 8 Ω

■ Other connectors

Time code input:
XLR×1
External VTR control:
RS-422A (D-SUB, 9P) ×2
Error report/Editing pad connection:
RS-232C (D-SUB, 25P) ×2

SAFETY PRECAUTIONS

GENERAL GUIDELINES

1. When servicing, observe the original lead dress. If a short circuit is found, replace all parts which have been over-heated or damaged by the short circuit.
2. After servicing, see to it that all the protective devices such as insulation barriers, insulation papers shields are properly installed.
3. After servicing, make the following leakage current checks to prevent the customer from being exposed to shock hazards.

LEAKAGE CURRENT COLD CHECK

1. Unplug the AC cord and connect a jumper between the two prongs on the plug.
2. Measure the resistance value, with an ohm meter, between the jumpered AC plug and each exposed metallic cabinet part on the equipment such as screwheads, connectors, control shafts, etc. The resistance value must be more than 5MΩ.

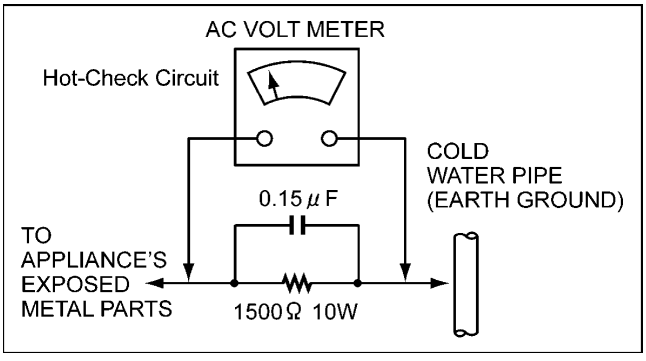

Figure1

LEAKAGE CURRENT HOT CHECK (See Figure 1)

1. Plug the AC cord directly into the AC outlet.
   Do not use an isolation transformer for this check.
2. Connect a 1.5kΩ , 10W resistor, in parallel with a 0.15μ F capacitor, between each exposed metallic part on the set an a good earth ground such as a water pipe, as shown in Figure1.
3. Use an AC voltmeter, with 1000 ohms/volt or more sensitivity, to measure the potential across the resistor.
4. Check each exposed metallic part, and measure the voltage at each point.
5. Reverses the AC plug in the AC outlet repeat each of the above measurements.
6. The potential at any point should not exceed 0.15 volts RMS. A leakage current tester (Simpson Model 229 equivalent) may be used to make the hot checks, leakage current must not exceed 0.1 milliamp. In case a measurement is outside of the limits specified, there is a possibility of a shock hazard, and the equipment should be repaired and rechecked before it is returned to the customer.

ELECTROSTATICALLY SENSITIVE (ES) DEVICES

Some semiconductor (solid state) devices can be damaged easily by static electricity. Such components commonly are called Electrostatically sensitive (ED) Devices. Examples of typical ES devices are integrated circuits and some field-effect transistors and semiconductor "chip" components. The following techniques should be used to help reduce the incidence of component damage caused by static electricity.

1. Immediately before handling any semiconductor component or semiconductor-equipped assembly, drain off any electrostatic charge on your body by touching a known earth ground.
   Alternatively, obtain and wear a commercially available discharging wrist trap device, which should be removed for potential shock reasons prior to applying power to the unit under test.
2. After removing an electrical assembly equipped with ES devices, place the assembly on a conductive surface such as aluminum foil, to prevent electrostatic charge buildup or exposure of the assembly.
3. Use only a grounded tip soldering iron to solder or unsolder ES devices.
4. Use only an anti-static solder removal device classified as "anti-static" can generate electrical charges sufficient to damage ES devices.
5. Do not use freon-propelled chemicals. These can generate electrical charges sufficient to damage ES devices.
6. Do not remove a replacement ES device from its protective package until immediately before you are ready to install it.
   (most replacement ES devices are package with leads electrically shorted together by conductive foam, aluminum foil or comparable conductive material).
7. Immediately before removing the protective material from the leads of a replacement ES device, touch the protective material to the chassis or circuit assembly into which the device will be installed.
   CAUTION : Be sure no power is applied to the chassis or circuit, and observe all other safety precautions.
8. Minimize bodily motions when handling unpacked replacement ES devices. (Otherwise harmless motion such as the brushing together of your clothes fabric or the lifting of your foot from a carpeted floor can generate static electricity sufficient to damage an ES device).

X-RADIATION

WARNING

1. The potential source of X-radiation in EVF sets is the High Voltage section and the picture tube.
2. When using a picture tube test jig for service, ensure that jig is capable of handling 10kV without causing x-radiation.

Note : It is important to use an accurate periodically calibrated high voltage meter.

3. Measure the High Voltage. The meter (electric type) reading should indicate 2.5kV, ± 0.15kV. If the meter indication is out of tolerance, immediate service and correction is required to prevent the possibility of premature component failure. To prevent an x-radiation possibility, it is essential to use the specified picture tube.

Panasonic

HCD0103NHFK52

SECTION 4

ELECTRICAL ADJUSTMENT

CONTENTS

1. POWER SUPPLY UNIT
1-1. Power Supply Voltage Adjustment ELC-1
2. SERVO (F1)
2-1. Reel Motor Torque Offset Adjustment ELC-2
2-2. Tension Arm Offset Voltage Adjustment..... ELC-2
2-3. Tension Arm Play Voltage Adjustment ELC-2
2-4. PG SHIFTER Adjustment (1)..... ELC-2
2-5. PG SHIFTER Adjustment (2)..... ELC-2
3. EQ (H1 / H2)
3-1. Connection of the Service Front Panel Unit..... ELC-3
3-3. Setting..... ELC-3
3-3. Adjustment Data Initialization ELC-4
3-4. VCO Center Frequency Value Reading..... ELC-4
3-5. Envelope Level Adjustment ELC-5
3-6. Phase Compensation Adjustment ELC-6
3-7. Confirmation of Error Rate and AEQ Tap Coefficient Values ELC-7
3-8. Saving Adjustment Data ELC-8
4. V OUT
4-1. Setting..... ELC-9
4-2. 4fsc PLL Center Frequency Adjustment..... ELC-11
4-3. CF Phase Adjustment(1)..... ELC-11
4-4. CF Phase Adjustment (2)..... ELC-11
4-5. Composite Signal Output Level Adjustment ELC-12
4-6. Composite Signal Sync Level Adjustment ELC-12
4-7. Composite Signal Sync Offset Level Adjustment..... ELC-13
4-8. Composite Signal Output DC Level Adjustment..... ELC-13
4-9. Composite Signal Frequency Characteristics Adjustment..... ELC-14
4-10. SYSTEM H, SC Adjustment..... ELC-14
4-11. Component Y Level Adjustment ELC-15
4-12. Component Y Frequency Characteristics Adjustment..... ELC-15
4-13. Component Pb Level Adjustment.....ELC-16
4-14. Component Pr Level Adjustment.....ELC-16
4-15. Component Pb/Pr Frequency Characteristics Adjustment ELC-17
4-16. Component Y-Pb Timing Adjustment ELC-17
4-17. Component Y-Pr Timing Adjustment.....ELC-18
4-16. Component Pb/Pr Frequency Characteristics Adjustment ELC-18
5. V IN (F7)
5-1. Connection of the Service Front Panel Unit ELC-19
5-2. Setting ELC-19
5-3. Component Y Level Adjustment.....ELC-21
5-4. Component Pb Level Adjustment.....ELC-21
5-5. Component Pr Level Adjustment.....ELC-21
5-6. Component Y/C Timing adjustment (2) ELC-21
5-7. Carrier Balance Adjustment.....ELC-22
5-8. Composite Y Level Adjustment ELC-22
5-9. Composite Pb Level Adjustment ELC-22
5-10. Composite Pr Level Adjustment ELC-23
5-11. Composite Vector Adjustment.....ELC-23
6. A_MONI_MIC(H5), A_AD(H6), A_DA(H7)
6-1. Connection of the Service Front Panel Unit ELC-24
6-2. Setting ELC-24
6-3. Monitor Output Level Adjustment ELC-25
6-4. Monitor Output Balance Adjustment.....ELC-25
6-5. MIC Input Level Adjustment ELC-26
6-6. CUE PB Level Adjustment ELC-26
6-7. CTL/CUE Erase Frequency Adjustment.....ELC-26
6-8. CTL/CUE Erase Current Adjustment.....ELC-26
6-9. Line Output Level Adjustment ELC-27
6-10. Line Output Balance Adjustment ELC-27
6-11. CMRR Adjustment ELC-27
6-12. Input Level Adjustment ELC-28
7. LOCATION OF TEST POINTS & CONTROLS

1. POWER SUPPLY UNIT

1-1. Power Supply Voltage Adjustment

C.B.A.	POWER UNIT
TP	TP8 (+5V), TP4 (+12V) (on extension board)
ADJ.	VR1 (+5V), VR2 (+12V)
TAPE	-
INPUT	-
MODE	EJECT
M. EQ	DVM
SPEC.	+5.05V±0.05V (TP8/VR1) +11.8V±0.6V (TP4/VR2)

1. Extend the SYSCON board (F2) with an extension board.
2. Turn power ON, and verify that "***EJECT***" is displayed on the pitcher of VIDEO OUT 3.
3. Connect DVM to TP8 on the extension board and adjust VR1 so that the DC voltage at TP8 is within the specification.
4. Connect DVM to TP4 on the extension board and adjust VR2 so that the DC voltage at TP4 is within the specification.

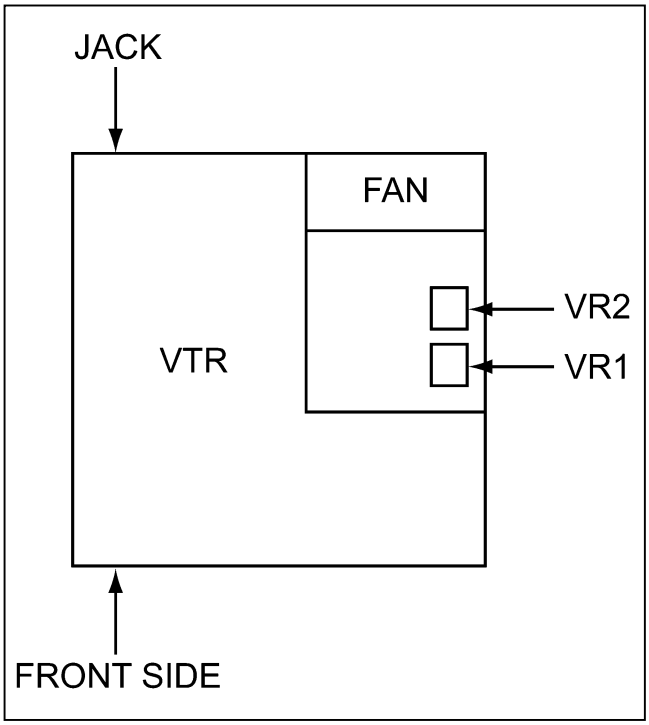

Figure 1-1 Power Supply Voltage Adjustment

2. SERVO (F1)

2-1. Reel Motor Torque Offset Adjustment

C.B.A.	SERVO (F1)
TP	Reel block
ADJ.	Service Menu : SERVO
TAPE	-
INPUT	-
MODE	SERVICE MODE
M. EQ	Dial torque gauge
SPEC.	0.15cNm±0.02cNm (15g-cm±2g-cm) (Average of 5 times measurement)

1. Remove the front loading unit. (Refer to ***Section 3 Disassembly Procedure***.)
2. Connect the **carriage plate** (see the following figure) to connector P1 from the "**CARRIGE P Plate**" of the front loading unit.
3. Set DIP switch pin **SW1-1** located behind the front panel to ON position.
4. Turn ON the main unit power.
5. Press the MENU switch located on the sub-panel under the front panel to display the Service Menu.
6. With the JOG dial, select ***A1: T TORQUE***.
7. Attach the dial torque gauge to the take-up side of the reel table and keep pressing the JOG/SHTL button. (The torque gauge should be held firmly and vertically to the surface so that it does not push the reel table.)
8. Read the torque gauge when the loading is completed (5 times).
9. Adjust the torque offset value in the Service Menu by the JOG dial so that the average of five times measurement value is in the specification.
10. With the JOG dial select "***A2: S TORQUE***".
11. Mount the dial torque gauge on the supply side reel. Keep pressing the JOG/SHTL button.
12. Perform the supply side reel torque adjustment by same method of step 7 and 9.

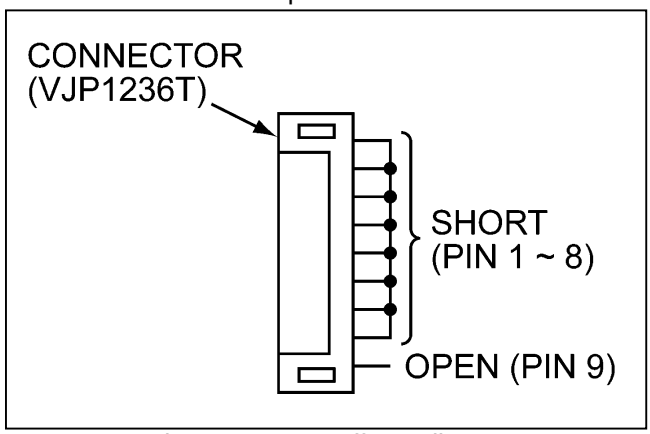

Reel motor torque offset adjustment

2-2. Tension Arm Offset Voltage Adjustment

Refer to ***"1-5, Tension Arm Offset Voltage Adjustment"*** in ***"Section 4. Mechanism"***.

2-3. Tension Arm Play Voltage Adjustment

Refer to ***"1-7, Tension Arm Play Voltage Adjustment"*** in ***"Section 4. Mechanism"***.

2-4. PG SHIFTER Adjustment (1)

C.B.A.	SERVO (F1)
TP	TP722 (PR L HSW), TP320 (SPA REC)
ADJ.	SERVICE MENU : SERVO
TAPE	VFM3580KM
INPUT	-
MODE	PLAY
M. EQ	Monitor TV, Oscilloscope
SPEC.	t1 = 63.4μs ± 2μs t2 = 63.4μs ± 2μs

SETTING

- Service Front Panel
  MODE SW : TAPE
  INSERT/CUE KEY : OFF
  DIP SW1 : SW1-1 = ON

1. Open the Servo Adjustment Menu in the Service Menu and select "PG SHIFT 18K".
2. Playback the color bar portion of VFM3580KM or VFM3580KL.
3. Keep pressing the search button until the updated numeric value is displayed on the right side of PG SHIFT 18 after original value goes off once.
4. Connect a scope to TP722 and TP320.
5. Confirm the t1 and t2 are 63.4μs±2μs.
6. Close the Service Menu.

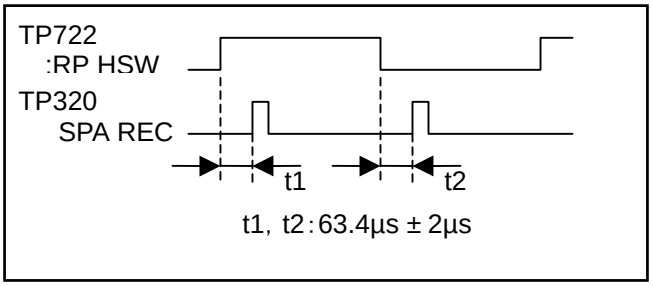

PG Shifter Adjustment (1)

2-5. PG SHIFTER Adjustment (2)

C.B.A.	SERVO (F1)
TP	TP722 (RP L HSW) TP320 (SPA REC)
ADJ.	-
TAPE	VFM3580KM
INPUT	-
MODE	PLAY
M. EQ	Oscilloscope, Monitor TV
SPEC.	t1 = 126.8μs ± 2μs t2 = 126.8μs ± 2μs

SETTING

- Service Front Panel
  MODE SW : TAPE
  INSERT/CUE KEY : OFF
  DIP SW1 : SW1-1 = ON

1. Open the Servo Adjustment Menu in the Service Menu and select PG SHIFT 9K.
2. Playback the color bar portion of VFM3580KM or VFM3580KL.
3. Keep pressing the search button until the undated numeric value is displayed on the right side of PG SHIFT 9K after original value goes off once.
4. Connect a scope to TP722 and TP320.
5. Confirm the t1 and t2 are 126.8μs±2μs.
6. Close the Service Menu.

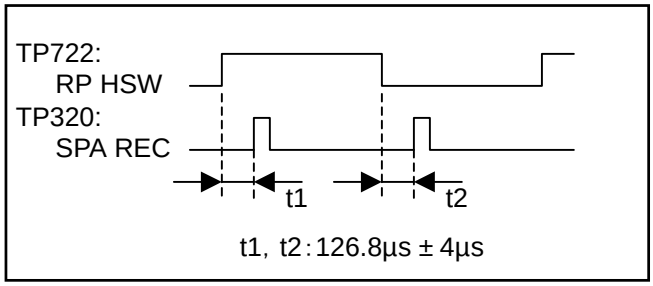

PG Shifter Adjustment (2)

3. EQ (H1 / H2)

Perform adjustments is this section after adjustment of the SERVO Board (F1) and the initial setting described below.

3-1. Connection of the Service Front Panel Unit

Refer to **"7*, Connection of the Service Front Panel Unit"*** in ***"Section 2. Service Information"***.

3-2. Setting

A. Set the **"Service Front Panel Unit"** as follows.

- CF : 4F/ 8F
- TC : REGEN, FREE RUN
- REC INHBIT : OFF
- TV SYSTEM : 525
- DIP SW1 (back side) : SW1-1 = ON, SW1-2 = OFF, SW1-3 = ON, SW1-4 = OFF
- MODE : TAPE

B. Press the **MENU** button to open the **SET-UP MENU** and perform the settings indicated below.

Menu Name	Setting
012 SYSTEM FORMAT	50M
013 PB FORMAT	MANUAL

This adjustment mainly uses the Service Menu. The procedures for opening the menu, changing the settings and closing the menu are described below.

1. Opening the Service Menu
   a) Set DIP SW1-1 (service mode) located on the rear side of the front panel to "ON".
   b) Set the CF switch on the SUB SW door of the front panel to 4F/8F (to switch the audio level meter to the error rate display). Set the TC switch to REGEN (to set CONCEAL to OFF).
   c) Press the MENU button on the SUB SW door of the front panel.
   d) The Service Menu is displayed on the monitor for the VIDEO OUT 3/SERIAL OUT 3 signal.
2. Changing the Setting
   Caution : The setting change can only be performed when the tape is inserted.
   a) Turn the JOG dial and move the cursor (∗) to the desired setting item and press the SET button on the lower door of the front panel.
   b) While pressing the JOG button, turn the JOG dial to change the setting value.
3. Closing the Service menu
   a) After the setting change is completed, press the "SET" button. Press the MENU button to close the service menu.

Perform the adjustment of these items according to the following flowchart.

Playback Adjustments

All adjustment must be performed under the following modes each.
1) DVCPRO 18000 mode (PB L, PB R, RP L, RP R)
2) DVCPRO 9000 mode (PB L, PB R, RP L, RP R)

3-3. Adjustment Data Initialization
↓
3-4. VCO Center Frequency Value Reading
↓
3-5. Envelope Level Adjustment
↓
3-6. Phase Compensation Adjustment
↓
3-7. Confirmation of Error Rate and AEQ Tap Coefficient Values
↓
3-8. Saving Adjustment Data

3-3. Adjustment Data Initialization

Initialize the adjustment values for the following items before start the adjustment. (It may not be possible to obtain the best values if the adjustment is performed without the initialization).

1. Insert the DVCPRO alignment tape. (VFM3580KM or VFM3580KL).
2. Press the MENU button to open the Service Menu.
3. Open **"B00:RF ADJUST"** in the Service Menu.
4. Open **"C00: DVCPRO18000 ADJUST"** in the Service Menu.
5. Open **"C-7 DEFAULT"** in the Service Menu.
6. Select **"INIT LOAD"**. Press the SET button to complete the initialization of the 50M mode adjustment values.
7. Press the MENU button to return to the RF ADJUST menu.
8. Open **D00: DVCPRO9000 ADJUST** in the Service Menu.
9. Open **D-7 DEFAULT** in the Service Menu.
10. Select **INIT LOAD** and press the SET button to complete the initialization of the 25M mode adjustment values.
11. Press the MENU button to return to the RF ADJUST menu.

3-4. VCO Center Frequency Value Reading

C.B.A.	EQ1(H1), EQ2(H2)
TP	-
ADJ.	Service Menu
TAPE	-
INPUT	-
MODE	EJECT
M.EQ	-
SPEC.	-

<Caution>
Perform the following adjustment at EJECT mode. (If this adjustment is performed at PLAY or REC mode, "3-7 Confirmation of Error Rate and AEQ Tap Coefficient Values" may be incomplete. If it was done perform "3-3 Adjustment Data Initialization".)

＜DVCPRO 18000 mode C-3:PB L ADJUST＞

1. Press the MENU button and open the Service Menu.
2. Open **B00: RF ADJUST** in the Service Menu.
3. Open **C00: DVCPRO 18000 ADJUST** in the Service Menu.
4. Open **C-3: PB L ADJUST** in the Service Menu.
5. Select **C31: IC READ** and change the setting from "OFF" to **"SINGLE"**.
6. Press the SET button so that automatically set the **"C:18 VCO PB L"** adjustment value is set automatically.
7. Select **C31: IC READ** and change the setting from "SINGLE" to **"OFF"**. Press the **"SET"** button.
8. Press the MENU button to return to the **C00: 50M ADJUST** menu.
9. Perform above steps 4 to 8 in the same manner for the following items.
   1) C-4: PB L ADJUST
   2) C-5: RP L ADJUST
   3) C-6: RP R ADJUST
10. Press the MENU button to return to the RF ADJUST menu.

＜DVCPRO 9000 mode D-3:PB L ADJUST＞

11. Open **D00: DVCPRO 9000 ADJUST** in the Service Menu.
12. Open **D-3: PB L ADJUST** in the Service Menu.
13. Select **D31: IC READ** and change the setting from "OFF" to **"SINGLE"**.
14. Press the SET button so that the **"D18: VCO PB L"** adjustment value is set automatically.
15. Select **D31: IC READ** and change the setting from "SINGLE" to **"OFF"**. Press the **"SET"** button.
16. Press the MENU button to return to the **D00: DVCPRO 9000 ADJUST** menu.
17. Perform above step 12 to 16 in the same manner for the following items.
    1) D-4: PB R ADJUST
    2) D-5: RP L ADJUST
    3) D-6: RP R ADJUST
18. Press the MENU button to return to the RF ADJUST menu.

3-5. Envelope Level Adjustment

C.B.A.	EQ1(H1), EQ2(H2)
TP	See the following table.
ADJ.	Service Menu
TAPE	VFM3580KM(L)/VFM3010EMS Alignment Tape (Color Bar)
INPUT	Internal SG (Color bar)
MODE	PLAY
M.EQ	Oscilloscope
SPEC.	＋0.9VDC±0.1VDC

SW SETTING

EQ1: SW300-1 = ON, SW300-4 = ON
SW600-1 = ON, SW600-4 = ON
EQ2: SW300-1 = ON, SW300-4 = ON
SW600-1 = ON, SW600-4 = ON

Test point is in the following chart. Extend the each board with extension board before performing the adjustment.

<Preparation (Chart 1)>

Mode	Item	C.B.A.
DVCPRP 18000	C-3: PB L ADJUST C-5: RP L ADJUST	EQ1 (H1)
DVCPRO 9000	D-3: PB L ADJUST D-5: RP L ADJUST	
DVCPRO 18000	C-4: PB R ADJUST C-6: RP R ADJUST	EQ2 (H2)
DVCPRO 9000	D-4: PB R ADJUST D-6: RP R ADJUST	

<DVCPRO 18000 Mode Test Point (Chart 2)>

Item	Envelop e TP	HSW TP (Trigger)	C43: ATF HEAD
C-3: PB L ADJUST	TP24	TP1	PB
C-5: RP L ADJUST	TP44	TP2	RP
C-4: PB R ADJUST	TP24	TP1	PB
C-6: RP R ADJUST	TP44	TP2	RP

<DVCPRO 9000 Mode Test Point (Chart 3)>

Item	Envelop e TP	HSW TP (Trigger)	D43: ATF HEAD
D-3: PB L ADJUST	TP24	TP1	PB
D-5: RP L ADJUST	TP44	TP2	RP
D-4: PB R ADJUST	TP24	TP1	PB
D-6: RP R ADJUST	TP44	TP2	RP

<DVCPRO 18000 Mode C-3:PB L Adjust>

1. Extend the EQ 1 (H1) board. (Refer to Chart 1.)
2. Connect the oscilloscope CH1 to TP24 and CH2 to TP1. Trigger TP1 (CH2). (Refer to Chart 2.)
3. Play back the alignment tape.
4. Open **B00 RF ADJUST** in the Service Menu.
5. Open **C00 DVCPRO 18000 ADJUST** in the Service Menu.
6. Open **C-2: PB1 ADJUST** in the Service Menu.
7. Set **C43: ATF HEAD** to PB. (Refer to Chart 2.)
8. In case of **DV9000** mode, adjust **E42: TRACKING VAR** so that the envelope level is maximum level.
9. Adjust **C03: MAG PB L1** and **C04: MAG PB L2** in the Service Menu so that the TP24 DC voltage "A" is +0.9V ± 0.1VDC. (Refer to the following figure.)
10. Press the SET button after the adjustment is completed.
11. Refer to Chart 1 to 4 to perform the same adjustments for each mode. And refer to the the following Caution.

<Caution>

1. Select the ATF HEAD as indicated in chart 2 to 4.
2. Refer to the following chart to perform the adjustment step9.

Item	Adj. Item 1	Adj. Item 2
C-3: PB L ADJUST	C03: MAG PB L1	C04: MAG PB L2
C-5: RP L ADJUST	C03: MAG RP L1	C04: MAG RP L2
C-4: PB R ADJUST	C03: MAG PB R1	C04: MAG PB R2
C-6: RP R ADJUST	C03: MAG RP R1	C04: MAG RP R2
D-3: PB L ADJUST	D03: MAG PB L1	D04: MAG PB L2
D-5: RP L ADJUST	D03: MAG RP L1	D04: MAG RP L2
D-4: PB R ADJUST	D03: MAG PB R1	D04: MAG PB R2
D-6: RP R ADJUST	D03: MAG RP R1	D04: MAG RP R2

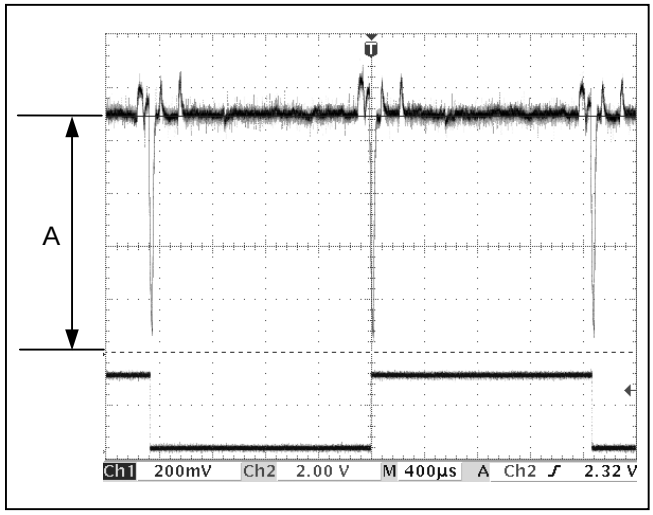

3-6. Phase Compensation Adjustment

C.B.A.	EQ1(H1), EQ2(H2)
TP	See the following table.
ADJ.	Service Menu.
TAPE	VFM3580KM(L)/VFM3010EMS Alignment Tape (Color Bar)
INPUT	Color bar
MODE	PLAY
M.EQ	Oscilloscope
SPEC.	＋0.9VDC±0.1VDC

Item	Adj. Item 1	Adj. Item 2
C-3: PB L ADJUST	C01: PHS PB L1	C02: PHS PB L2
C-5: RP L ADJUST	C01: PHS RP L1	C02: PHS RP L2
C-4: PB R ADJUST	C01: PHS PB R1	C02: PHS PB R2
C-6: RP R ADJUST	C01: PHS RP R1	C02: PHS RP R2
D-3: PB L ADJUST	D01: PHS PB L1	D02: PHS PB L2
D-5: RP L ADJUST	D01: PHS RP L1	D02: PHS RP L2
D-4: PB R ADJUST	D01: PHS PB R1	D02: PHS PB R2
D-6: RP R ADJUST	D01: PHS RP R1	D02: PHS RP R2

<DVCPRO 18000 Mode C-3:PB L Adjust>

1. Install all the P.C.B.s to the unit without extension board.
2. Insert the DVCPRO alignment tape and play it back.
3. Press the MENU button and open the Service Menu.
4. Open **B00: RF ADJUST** in the Service Menu.
5. Open **C00: DVCPRO 18000 ADJUST** in the Service Menu.
6. Open **C-3: PB L ADJUST** in the Service Menu.
7. Select **C43: ATF HEAD** and change the setting to PB.
8. Select **C32: VITERBI READ** and change the setting from ON to OFF.
9. Select **C34: AEQ MODE** and change the setting from ON to OFF.
10. Press the SET button.
11. Adjust **C01: PHS PB L1** and **C02: PHS PB L2** so that the error rate is the minimum level.(Set the adjustment values to the maximum number and adjust the error rate from the high errer condition.) Press the SET button after the adjustment is completed.
12. Press the MENU button to return to the C00: DVCPRO 18000 ADJUST menu.
13. Perform above step 6 to 12 in the same manner for the following items.

    1) C-4: PB R ADJUST
    2) C-5: RP L ADJUST
    3) C-6: RP R ADJUST

Refer to Chart 2 in the previous item “3-5 Envelope Level Adjustment” to perform the ATF HEAD selection in step 7.

<DVCPRO 9000 Mode D-3:PB L Adjust>

14. Press the MENU button to return to the RF ADJUST menu.
15. Open **D00: DVCPRO 9000 ADJUST** in the Service Menu.
16. Open **D-3: PB L ADJUST** in the Service Menu.
17. Select **D43: ATF HEAD** and change the setting to PB.
18. Select **D32: VITERBI MODE** and change the setting from ON to OFF.
19. Select **D34: AEQ MODE** and change the setting from ON to OFF.
20. Press the SET button.
21. Adjust **D01: PHS PB L1** and **D02: PHS PB L2** so that the error rate is the minimum level.
    (Set the adjustment values to the maximum number and adjust the error rate from the high error condition.)
    Press the SET button after the adjustment is completed.
22. Press the MENU button to return to the D00: DVCPR 9000 ADJUST menu.
23. Perform above step 16 to 22 in the same manner for the following items.

    1) D-4: PB R ADJUST
    2) D-5: RP L ADJUST
    3) D-6: PP R ADJUST

    Refer to Chart 2 in the previous item “3-5 Envelope Level Adjustment” to perform the ATF HEAD selection in step 17.

24. Press the MENU button to return to the RF ADJUST menu.

3-7. Confirmation of Error Rate and AEQ Tap Coefficient Values

C.B.A.	EQ1(H1), EQ2(H2)
TP	Audio meter (Error Rate Display).
ADJ.	Service Menu
TAPE	VFM3580KM(L)/VFM3010EMS Alignment Tape (Color Bar)
INPUT	-
MODE	PLAY
M.EQ	-
SPEC.	-

<DVCPRO 18000 Mode C-3:PB L Adjust>

1. Insert the DVCPRO alignment tape and play it back.
2. Press the MENU button and open the Service Menu.
3. Open **B00: RF ADJUST** in the Service Menu.
4. Open **C00: DVCPRO 18000 ADJUST** in the Service Menu.
5. Open **C-3: PB L ADJUST** in the Service Menu.
6. Select **C43: ATF HEAD** and change the setting to PB.
7. Select **E32: VITERBI MODE** and change the setting from OFF to ON.
8. Select **E34: AEQ MODE** and change the setting from OFF to ON.
9. Press the SET button.
10. Check the error rate on the audio meter of the front panel. Make sure that it is lower than level A shown in the figure.
    * Confirm the video error rate and the audio error rate.
    - Service Front Panel Unit
      TC SW = INT : VIDEO error rate
      TC SW = EXT : AUDIO error rate
11. Select **C31: IC READ** and change the setting from "OFF" to **"SINGLE"**.
12. Press the SET button to set the AEQ tap coefficient automatically.
13. Select **C31: IC READ** and change the setting from "SINGLE" to **"OFF"**. Press the **"SET"** button.
14. Press the MENU button to return to the C00:DVCPRO 18000 ADJUST menu.
15. Perform above step 5 to 14 in the same manner for the following items.
    1) C-4: PB R ADJUST
    2) C-5: RP L ADJUST
    3) C-6: RP R ADJUST
    Refer to Chart 2 in the item "3-5 Envelope Level Adjustment" to perform the ATF HEAD selection in above step 6.

<DVCPRO 9000 Mode D-3:PB L Adjust>

16. Press the MENU button to return to the RF ADJUST menu.
17. Open **D00: DVCPRO 9000 ADJUST** in the Service Menu.
18. Open **D-3: PB L ADJUST** in the Service Menu.
19. Select **D43: ATF HEAD** and change the setting to PB.
20. Select **E32: VITERBI MODE** and change the setting from OFF to ON.
21. Select **E34: AEQ MODE** and change the setting from OFF to ON.
22. Press the SET button.
23. Check the error rate on the audio meter of the front panel. Make sure that it is lower than level A shown in the figure.
    * Confirm the video error rate and the audio error rate.
    - Service Front Panel Unit
      TC SW = INT : VIDEO error rate
      TC SW = EXT : AUDIO error rate
24. Select **D31: IC READ** and change the setting from "OFF" to **"SINGLE"**.
25. Press the SET button to set the top AEQ coefficient automatically.
26. Open **D31: IC READ** and change the setting from "SINGLE" to **"OFF"**. Press the "SET" button.
27. Press the MENU button to return to the D00: DVCPRO 9000 ADJUST menu.
28. Perform above step 18 to 27 in the same manner for the following items.
    1) D-4: PB R ADJUST
    2) D-5: RP L ADJUST
    3) D-6: RP R ADJUST
    Refer to Chart 2 in the previous item "3-5 Envelope Level Adjustment" to perform the ATF HEAD selection in step 19.

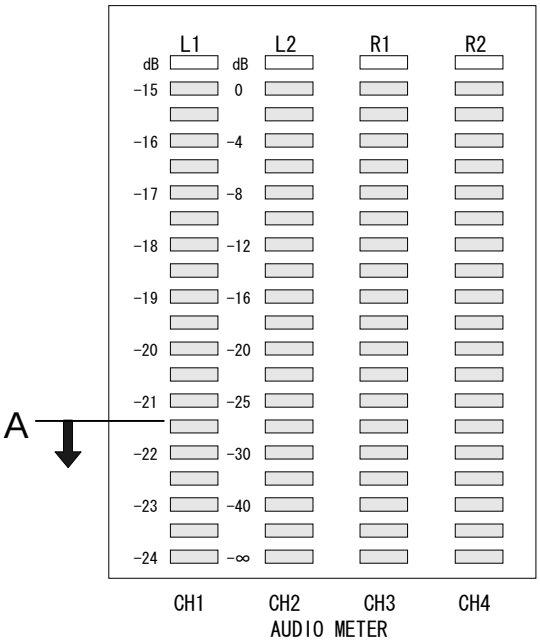

3-8. Saving Adjustment Data

Save the adjustment values by the following procedures after the adjustment is completed

1. Insert the DVCPRO alignment tape (VFM3510KM or VFM3680KM).
2. Press the MENU button and open the Service Menu.
3. Open **B00: RF ADJUST** in the Service Menu.
4. Open **C00: DVCPRO 18000 ADJUST** in the Service Menu.
5. Select **C-7: DEFAULT** in the Service Menu.
6. Select **SAVE** and press the SET button to save the DVCPRO 18000 mode adjustment values.
7. Press the MENU button to return to the RF ADJUST menu.
8. Open **D00: DVCPRO 9000 ADJUST** in the Service Menu.
9. Select **D-7: DEFAULT** in the Service Menu.
10. Select **SAVE** and press the SET button to save the DVCPRO 9000 mode adjustment values.
11. Press the MENU button to return to the RF ADJUST menu.
12. Open **E00: DV 9000 ADJUST** in the Service Menu.
13. Select **E-3: DEFAULT** in the Service Menu.
14. Select **SAVE** and press the SET button to save the DV 9000 mode adjustment values.

4. V OUT

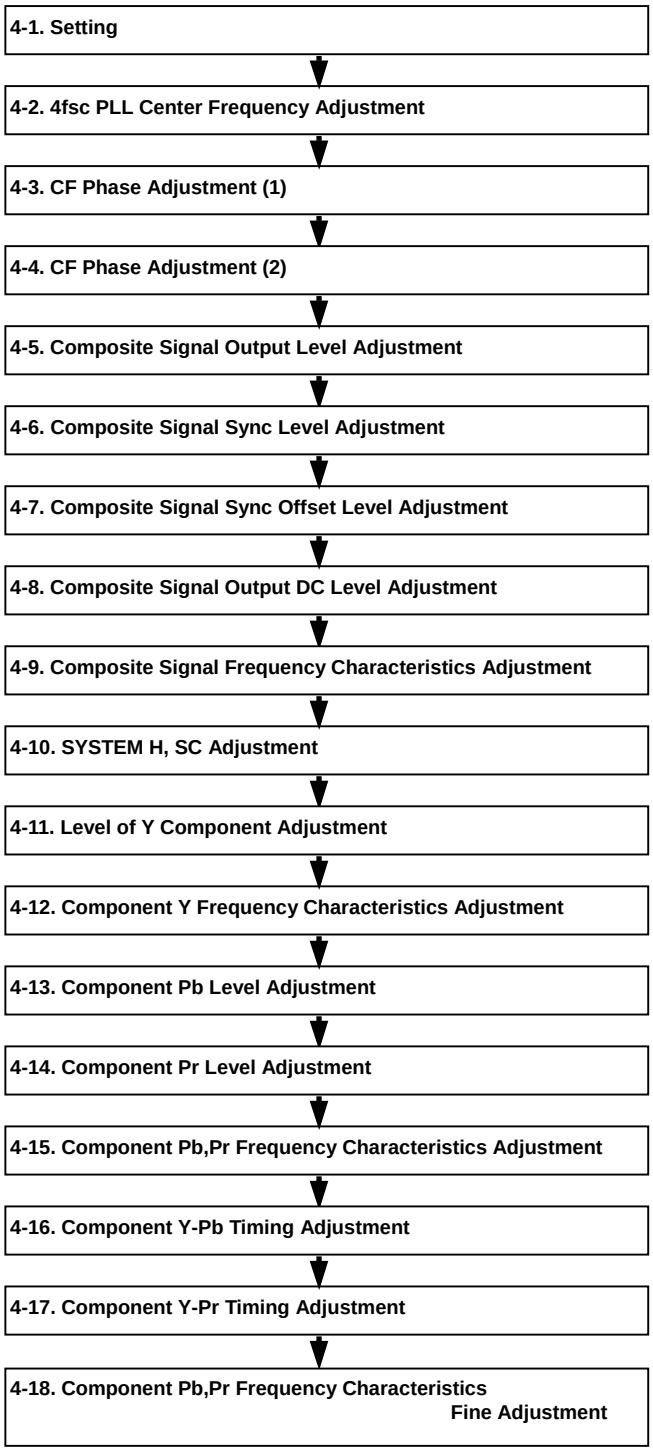

4-1. Setting

A. Set the **"Service Front Panel Unit"** as follows.

- CF : 4F/ 8F
- TC : REGEN, FREE RUN
- REC INHBIT : OFF
- TV SYSTEM : 525
- DIP SW1 (back side) : SW1-1 = ON, SW1-2 = OFF, SW1-3 = ON, SW1-4 = OFF
- MODE : TAPE

① EE/TAPE select

	INSERT CUE
TAPE	ON
EE	OFF

② INPUT select

	CH1	CH2
Y/Pb/Pr	OFF	OFF
CMPST	OFF	ON
SDTI	ON	OFF
SDI	ON	ON

B. Press the **MENU** button to open the **SERVICE MENU** and perform the setting indicated below.

F00 : VIDEO ADJUST
F11: V SETUP = ON

C. Press the **MENU** button to open the **SET-UP MENU** and perform the setting indicated below.

623 : SETUP 50
00 : CMPST IN = THRU
01 : CMPST OUT = THRU

For V OUT adjustment, make the connections as shown in the following diagram. And also before this adjustment, the power should be turned ON for more than 15 minutes with all the PCBs in.

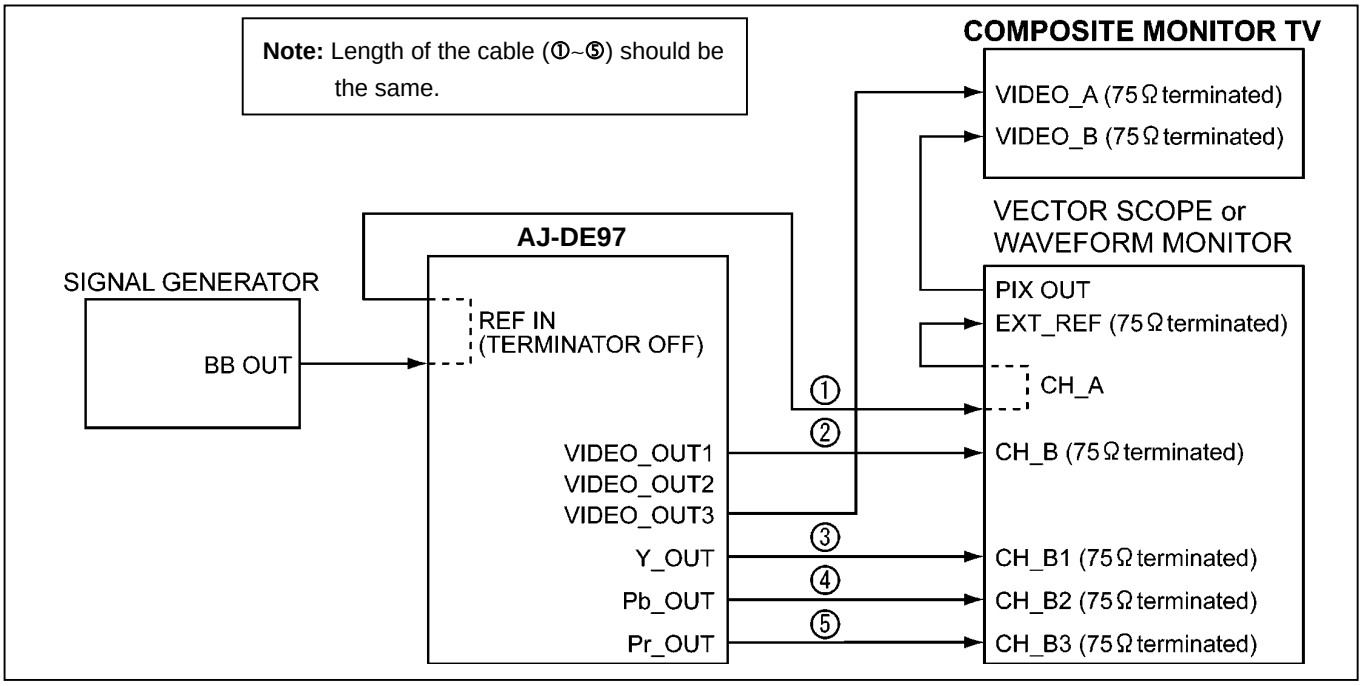

Connections for V OUT adjustment

4-2. 4fsc PLL Center Frequency Adjustment

C.B.A.	V OUT (F5)
TP	TP13 (C-2), TP8 (A-4) [Trigger]
ADJ.	VC1 [FS PHASE NTSC] (B-1)
TAPE	VFM3380KM Color Bar Full Field (100%)
INPUT	Black burst (REF IN)
MODE	EE
M. EQ	Oscilloscope
SPEC.	A = 0V±0.1V (DC)

1. Connect the oscilloscope to **TP13**.
2. Adjust **VC1** so that DC level **A** of **TP13** is **within the range 0V±0.1V (DC)** as shown in *Figure*.

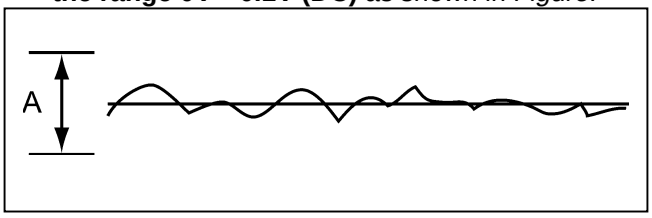

4fsc PLL Center Frequency Adjustment

4-3. CF Phase Adjustment(1)

C.B.A.	V OUT (F5)
TP	TP4 (B-1), TP7 (B-4)
ADJ.	VR3007 [CF ADJ NTSC] (A-3)
TAPE	VFM3380KM Color Bar Full Field (100%)
INPUT	Black burst (Ref. In)
MODE	EE
M. EQ	Oscilloscope
SPEC.	See *Figure*.

1. Turn **VR7** fully counter-clockwise.
2. Then turn it slowly clockwise so that the phase of the CF Flag of TP7 matches with that of the CF signal of **TP4**, as shown in *Figure B*.

<NOTE>

Use an oscilloscope that can measure signals of 100 MHz or greater.

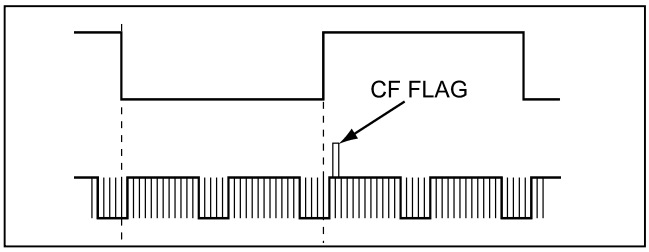

Figure B CF Phase Adjustment (1)

4-4. CF Phase Adjustment (2)

C.B.A.	V OUT (F5)
TP	TP1, TP2 (B-1)
ADJ.	VR3007 [CF ADJ NTSC] (A-3)
TAPE	VFM3380KM Color Bar Full Field (100%)
INPUT	Black burst (Ref. In)
MODE	EE
M. EQ	Oscilloscope
SPEC.	A = B ± 5nS

1. Connect the Unit, the signal generator, and the oscilloscope as shown in Figure.
2. Place the oscilloscope in **CHOP** mode and use the falling edge of **TP2** as the trigger and expand the peak section.
3. Adjust VR3007 so that with of A and B becomes equal as shown in Figure.

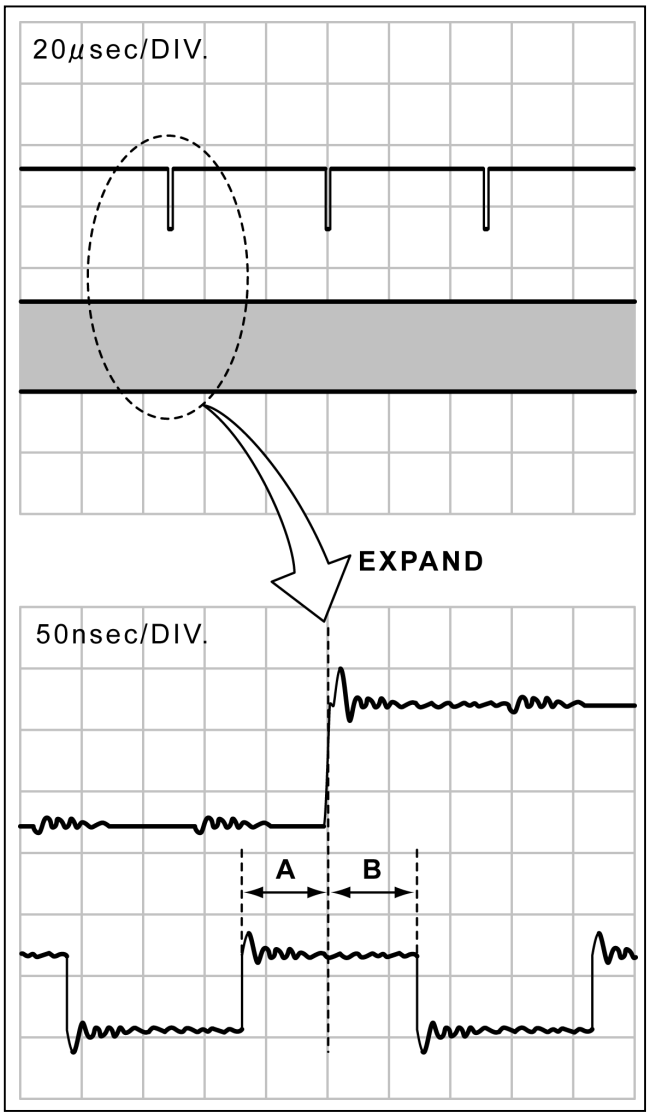

CF Phase Adjustment (2)

4-5. Composite Signal Output Level Adjustment

C.B.A.	V OUT (F5)
TP	VIDEO OUT 1 (75Ω)
ADJ.	VR3002 [ENC LEVEL] (J-3)
TAPE	VFM3380KM Color Bar Full Field (100%)
INPUT	Black burst (REF IN)
MODE	PLAY
M. EQ	Waveform monitor
SPEC.	A=714mV±5mV

<NOTE>

- Do not use an extension board for this adjustment.

1. Adjust **VR2** so that video level **A** is **714mV±5mV**, as shown in Figure.

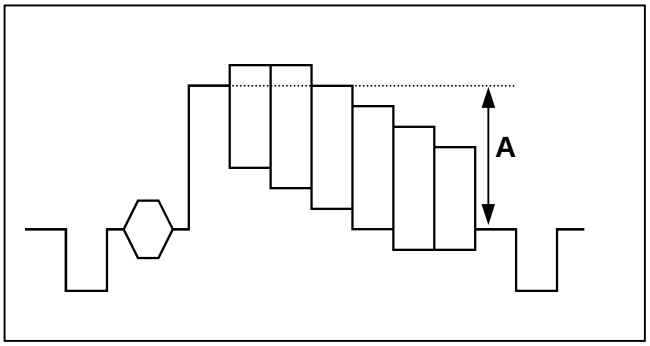

Output Level of Composite Signal Adjustment

4-6. Composite Signal Sync Level Adjustment

C.B.A.	V OUT (F5)
TP	VIDEO OUT 1 (75Ω)
ADJ.	VR3019 [SYNC LVL] (J-3)
TAPE	VFM3380KM Color Bar Full Field (100%)
INPUT	Black burst (REF IN)
MODE	PLAY
M. EQ	Waveform monitor
SPEC.	A=286mV±3mV

<NOTE>

- Do not use an extension board for this adjustment.
- The adjustment volume is located under the SUB circuit board and can be adjusted on the circuit board.

1. Adjust **VR19** so that Sync level **A** is **286mV±3mV** as shown in Figure.

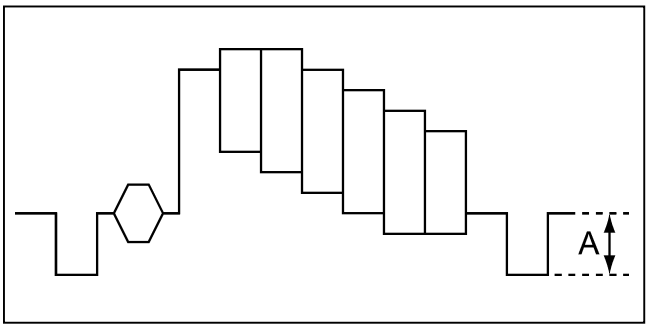

Sink Level of Composite Signal Adjustment

4-7. Composite Signal Sync Offset Level Adjustment

C.B.A.	V OUT (F5)
TP	VIDEO OUT 1 (75Ω)
ADJ.	VR3020 [SOFSIN] (K-3)
TAPE	VFM3380KM Color Bar Full Field (100%)
INPUT	Black burst (REF IN)
MODE	PLAY
M. EQ	Waveform monitor
SPEC.	See Figure

<NOTE>

- Do not use an extension board for confirmation.
- With models designed for North America, **01 CMPST OUT** of **623 SETUP50** in the user menu is set to **0001 ADD**.

1. Extend the board.
2. Adjust **VR20** so that to align the reference level of the Sync becomes same level of pedestal as indicated following Figure.
3. Install the circuit board that was extended.
4. Confirm that the reference level of the sync section match with the pedestal section.

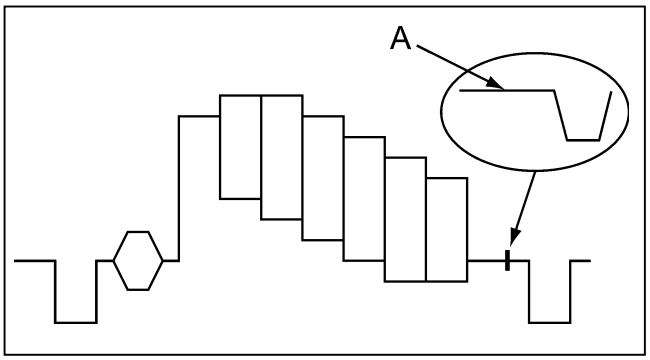

Sink Offset Level of Composite Signal Adjustment

4-8. Composite Signal Output DC Level Adjustment

C.B.A.	V OUT (F5)
TP	VIDEO OUT 3
ADJ.	VR3001 [ENC DC LEVEL] (K-3)
TAPE	VFM3380KM Color Bar Full Field (100%)
INPUT	Black burst (REF IN)
MODE	PLAY
M. EQ	Waveform monitor
SPEC.	See Figure

<NOTE>

- Do not use an extension board for confirmation adjustments.

1. Extend the board.
2. Press the **MENU** button located on the bottom of the front panel to display characters on the monitor screen.
3. Adjust **VR1** so that the black level of the characters becomes same as pedestal section, as shown in Figure.
4. Install the circuit board that was extended.
5. Confirm that the black level of the characters matches the pedestal level.

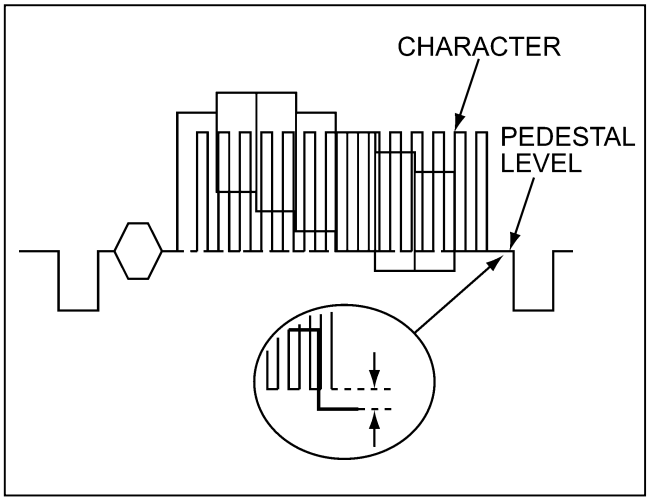

Output DC Level of Composite Signal Adjustment

4-9. Composite Signal Frequency Characteristics Adjustment

C.B.A.	V OUT (F5)
TP	VIDEO OUT 1 (75Ω)
ADJ.	VR3025 [SITE FRQ] (J-3)
TAPE	VFM3380KM Color Bar Full Field (100%)
INPUT	-
MODE	PLAY
M. EQ	Waveform monitor
SPEC.	A=286mV±3mV

<NOTE>

- Do not use an extension board for this adjustment.

1. Adjust **VR25** so that burst level **A** is **286mV±3mV** as shown in Figure.

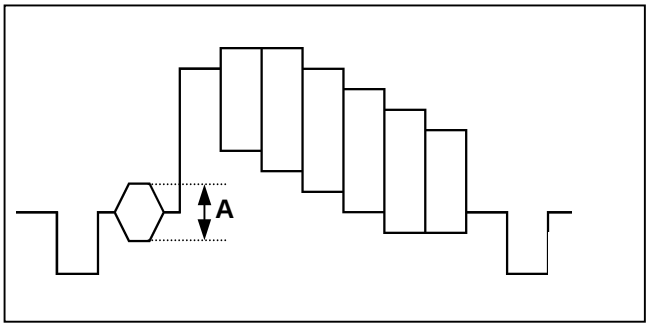

Frequency Characteristics of Composite Signal Adjustment

4-10. SYSTEM H, SC Adjustment

C.B.A.	V OUT (F5)
TP	VIDEO OUT 1 (75Ω)
ADJ.	VR3014 [H PHASE NTSC] (A-1) VR3015 [V PHASE NTSC] (D-1)
TAPE	VFM3380KM Color Bar Full Field (100%)
INPUT	Black burst (Ref. In)
MODE	PLAY
M. EQ	Waveform monitor Vector scope
SPEC.	REF IN & VIDEO OUT 1 phases match.

<NOTE>

- Set the Unit to the factory default mode before adjusting **SYSTEM menu** settings.

1. Verify the connections shown in *Figure Connections "4-1.Seeting"*.
2. Place the vector scope (waveform monitor) in **EXT** mode and align the vector phase (burst) of **CH A** with **180°** (*Figure A*).
3. Turn the vector scope to **CH B** and adjust **VR15** so that the vector phase (burst) is the same (**180°**) as that of **CH A** (*Figure A*).

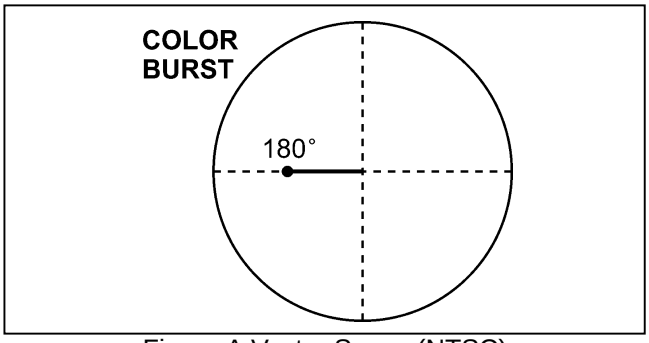

Figure A Vector Scope (NTSC)

4. Extend the H sink section using the waveform monitor and adjust **VR14** so tat the phases of **CH A** match with **CH B** (*Figure B*).

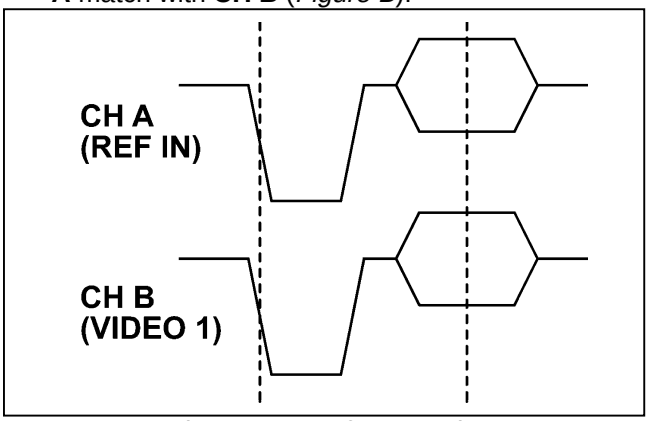

Figure B Waveform Monitor

4-11. Component Y Level Adjustment

C.B.A.	V OUT (F5) SUB (422 : 844DA)
TP	Y OUT (75Ω)
ADJ.	VR3001 [Y LEV] (F-3) VR3013 [422 SYNC LEVEL] (G-4) VR3007 [Y OFF SET] (F-3)
TAPE	VFM3380KM Color Bar Full Field (100%)
INPUT	Black burst (Ref. In)
MODE	PLAY
M. EQ	Waveform monitor
SPEC.	A=714mV±3mV B=286mV±3mV PEDESTAL=0mV±50mV

<NOTE>

- Do not use an extension board for this adjustment.
- Set **No.614: Pb/Pr OUT LV** in **SETUP MENU** to **BCAM**.

1. Adjust **VR3001** so that Y level **A** is **714mV±3mV** as shown in Figure.
2. Adjust **VR3013** so that SYNC level **B** is **286mV±3mV** as shown in Figure.
3. Adjust **VR3007** so that PEDESTAL level is **0mV±50mV** as shown in Figure.

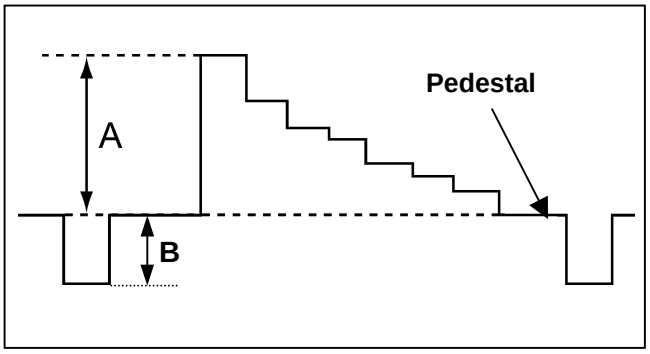

Component Y Level Adjustment

4-12. Component Y Frequency Characteristics Adjustment

C.B.A.	V OUT (F5) SUB (422DA)
TP	Y OUT (75Ω)
ADJ.	VR3002 [Y FREQ] (F-3)
TAPE	VFM3380KM Multi Burst
INPUT	-
MODE	PLAY
M. EQ	Waveform monitor
SPEC.	5.75MHz=FLAT (± 0.5 dB)

<NOTE>

- The adjustment volume is located under the SUB circuit board and can be adjusted above and below the circuit board.

1. Adjust **VR3002** so that the frequency properties become flat between **0.5** and **5.75 MHz** as shown in figure. Adjust it not to rise only the middle on between.

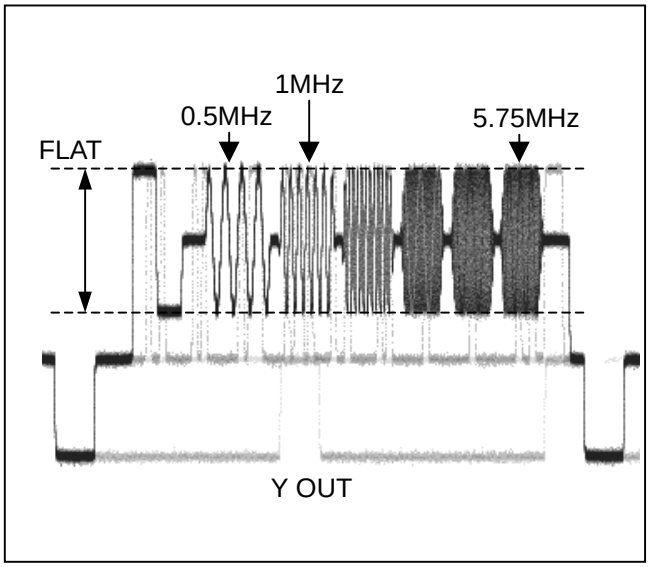

Component Y Frequency Characteristics Adjustment

4-13.Component Pb Level Adjustment

C.B.A.	V OUT (F5) SUB (422 : 844DA)
TP	Pb OUT (75Ω)
ADJ.	VR3006 [PB LEV] (F-2) VR3009 [PB OFF SET] (F-3)
TAPE	VFM3380KM Color Bar Full Field (100%)
INPUT	-
MODE	PLAY
M. EQ	Waveform monitor
SPEC.	A=1009mV±3mV Pedestal=0mV±50mV

<NOTE>

- Set **No.614: Pb/Pr OUT LV** in **SETUP MENU** to **BCAM**.

1. Adjust **VR3006** so that **Pb** level **A** is **1009mV± 4mV** as shown in Figure.
2. Adjust **VR3009** so that pedestal is **0mV ± 50mV**.

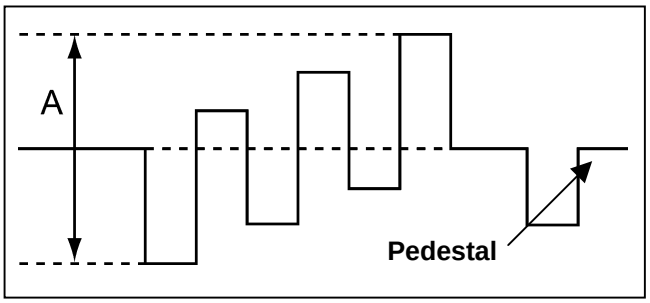

Component Pb Level Adjustment

4-14.Component Pr Level Adjustment

C.B.A.	V OUT (F5) SUB (422 : 844DA)
TP	Pr OUT (75Ω)
ADJ.	VR3004 [PR LEV] (F-1) VR3008 [PR OFF SET] (F-3)
TAPE	VFM3380KM Color Bar Full Field (100%)
INPUT	-
MODE	PLAY
M. EQ	Waveform monitor
SPEC.	A=1009mV±4mV

<NOTE>

- Set **No.614: Pb/Pr OUT LV** in **SETUP MENU** to **BCAM**.

1. Adjust **VR3004** so that **Pr** level **A** is **1009mV± 4mV** as shown in Figure.
2. Adjust **VR3008** so that pedestal is 0mV ± 50mV.

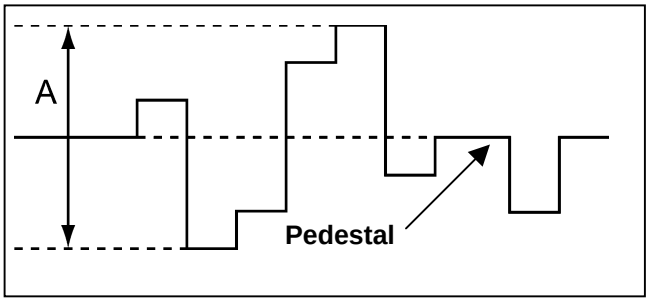

Component Pr Level Adjustment

4-15.Component Pb/Pr Frequency Characteristics Adjustment

C.B.A.	V OUT (F5) SUB (422 : 844DA)
TP	Pb OUT (75 Ω) Pr OUT (75 Ω)
ADJ.	VR3017 [PB FREQ] (G-2) VR3016 [PR FREQ] (G-2)
TAPE	VFM3380KM Multi Burst
INPUT	-
MODE	PLAY
M. EQ	Waveform monitor
SPEC.	2.75MHz = FLAT (± 0.5dB)

1. Adjust **VR3017** so that the frequency characteristics become flat between **0.5** and **2.75 MHz** as shown in figure. Adjust it not to rise only the middle in between.
2. Adjust **VR3016** so that the frequency characteristics become flat between **0.5** and **2.75 MHz** as shown in figure. Adjust so that only the middle in between.

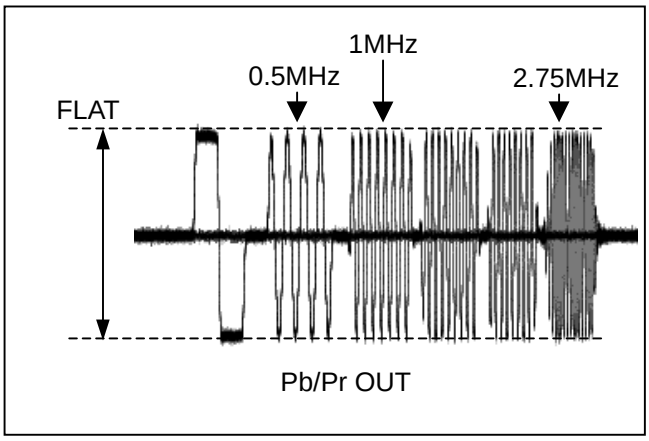

Components Pb/Pr Frequency Characteristics Adjustment

4-16.Component Y-Pb Timing Adjustment

C.B.A.	V OUT (F5) SUB (422 : 844DA)
TP	Y OUT (75 Ω), Pb OUT (75 Ω)
ADJ.	VR3005 [PB DL] (F-2)
TAPE	VFM3380KM Bowtie (500K)
INPUT	-
MODE	PLAY
M. EQ	Waveform monitor
SPEC.	A = B (0±5ns)

1. Verify the connections shown in Figure Connections for Adjusting V OUT (ELC-10) and set the waveform monitor to **DIFF** (**Y/C** Timing) mode, and measure **Y-Pb**.

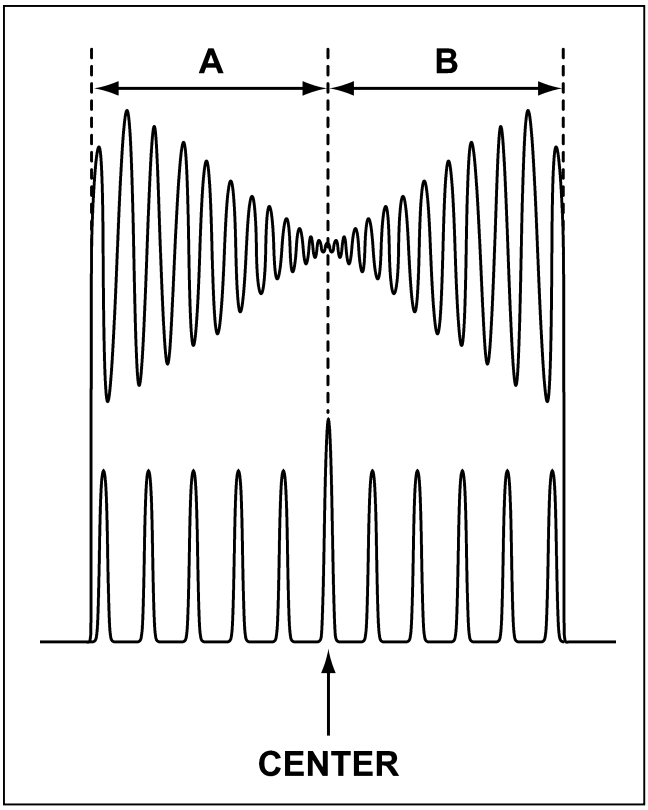

Component Y-Pb Timing Adjustment

<NOTE>

- If there is no Y, Pb or Pr (B1, B2 or B3) input to the waveform monitor, enter the Y signal through **CH-A** and the **Pb** signal through **CH-B**, and set to **DIFF (A-B)** mode.

- Note that adjustment cannot be done using a waveform monitor that does not have a **DIFF (A-B)** mode. In such case, an oscilloscope should be used in **ADD** mode **(CH1 + CH2)**, with the Y signal connected to **CH1**, the **Pb** signal connected to **CH2**, and one channel set to inverted (INV).

2. Adjust **VR3005** so that the cross-point of the envelope is in the center (i.e., the position indicated by the large marker), as in *Figure*.

4-17.Component Y-Pr Timing Adjustment

C.B.A.	V OUT (F5) SUB (422 : 844DA)
TP	Y OUT (75 Ω), Pr OUT (75 Ω)
ADJ.	VR3003 [PR DL] (F-2)
TAPE	VFM3380KM Bowtie (500K)
INPUT	-
MODE	PLAY
M. EQ	Waveform monitor
SPEC.	A = B (0±5ns)

<NOTE>

1. Verify the connections shown in Figure Connections for Adjusting V OUT (ELC-10) and set the waveform monitor to **DIFF** (**Y/C** Timing) mode, and measure **Y-Pb**.

<NOTE>

- If there is no Y, Pb or Pr (B1, B2 or B3) input to the waveform monitor, enter the Y signal through **CH-A** and the **Pb** signal through **CH-B**, and set to **DIFF (A-B)** mode.
- Note that adjustment cannot be done using a waveform monitor that does not have a **DIFF (A-B)** mode. In such cases, an oscilloscope should be used in **ADD** mode **(CH1 + CH2)**, with the Y signal connected to **CH1**, the **Pr** signal connected to **CH2**, and one channel set to inverted (INV).

2. Adjust **VR3003** so that the cross-point of the envelope is in the center (i.e., the position indicated by the large marker), as shown in Figure.

4-18.Component Pb/Pr Frequency Characteristics Adjustment

C.B.A.	V OUT (F5) SUB (422 : 844DA)
TP	Pb OUT (75 Ω) Pr OUT (75 Ω)
ADJ.	VR3017 [PB FREQ] (G-2) VR3016 [PR FREQ] (G-2)
TAPE	VFM3380KM Multi Burst
INPUT	-
MODE	PLAY
M. EQ	Waveform monitor
SPEC.	2.75MHz = FLAT (± 0.5dB)

1. Adjust **VR3017** so that the frequency characteristics become flat between **0.5** and **2.75 MHz** as shown in figure. Adjust it not for rise only the middle in between.
3. Adjust **VR3016** so that the frequency characteristics become flat between **0.5** and **2.75 MHz** as shown in figure. Adjust it not to rise only the middle in between.

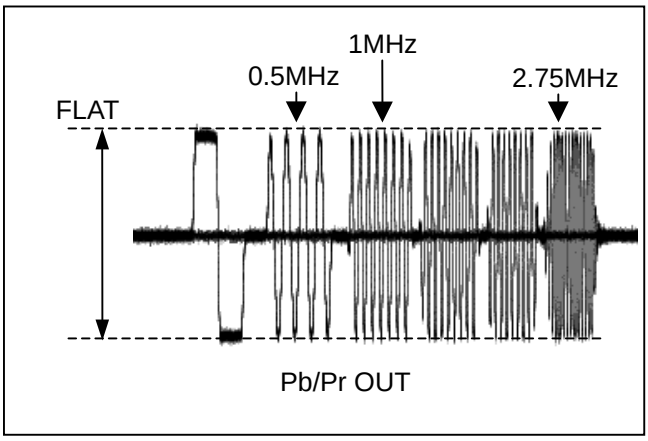

Components Pb/Pr Frequency Characteristics Adjustment

5. V IN (F7)

5-1. Connection of the Service Front Panel Unit
↓
5-2. Setting
↓
5-3. Component Y Level Adjustment
↓
5-4. Component Pb Level Adjustment
↓
5-5. Component Pr Level Adjustment
↓
5-6. Component Y/C Timing Adjustment
↓
5-7. Carrier Balance Adjustment
↓
5-8. Composite Y Level Adjustment
↓
5-9. Composite Pr Level Adjustment
↓
5-10. Composite Pr Level Adjustment
↓
5-11. Composite Vector Adjustment

5-1. Connection of the Service Front Panel Unit

Refer to **“ 7*, Connection of the Service Front Panel Unit”*** in ***“Section 2. Service Information”***.

5-2. Setting

A. Set the **“Service Front Panel Unit”** as follows.

- CF : 4F/ 8F
- TC : REGEN, FREE RUN
- REC INHBIT : OFF
- TV SYSTEM : 525
- DIP SW1 (back side) : SW1-1 = ON, SW1-2 = OFF, SW1-3 = ON, SW1-4 = OFF
- MODE : TAPE

① EE/TAPE selection

	INSERT CUE
TAPE	ON
EE	OFF

② INPUT selection

	CH1	CH2
Y/Pb/Pr	OFF	OFF
CMPST	OFF	ON
SDTI	ON	OFF
SDI	ON	ON

B. Press the **MENU** button to open the **SERVICE MENU** and perform the settings indicated below.

F00 : VIDEO ADJUST
F11: V SETUP = ON

C. Press the **MENU** button to open the **SET-UP MENU** and perform the settings indicated below.

623 : SETUP 50
00 : CMPST IN = THRU
01 : CMPST OUT = THRU

D. Connection

For V IN adjustment, make the connections as shown in the following diagram. And also before this adjustment, the power should be turned ON for more than 15 minutes with all the PCBs in.

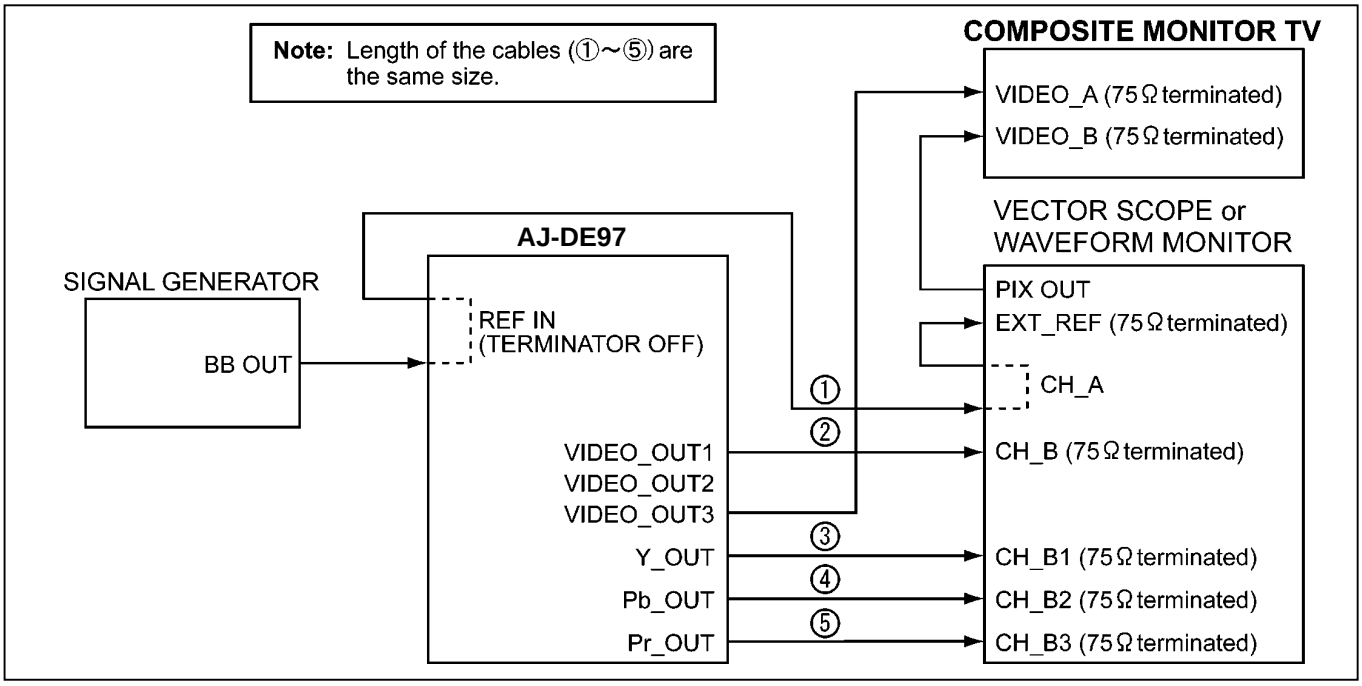

Connections for V IN adjustment

5-3. Component Y Level Adjustment

C.B.A.	V IN (F7)
TP	VIDEO OUTPUT Y (Component)
ADJ.	VR702, VR701
TAPE	-
INPUT	100% Color Bar (Component In)
MODE	EE
M. EQ	Wave Form Monitor
SPEC.	V1 = 0 mV ± 7 mV V2 = 714 mV ± 7mV

1. Adjust VR702 so that the V1 level is 0 mV ± 7 mV.
2. Adjust VR701 so that the V2 level is 714 mV ± 7 mV.

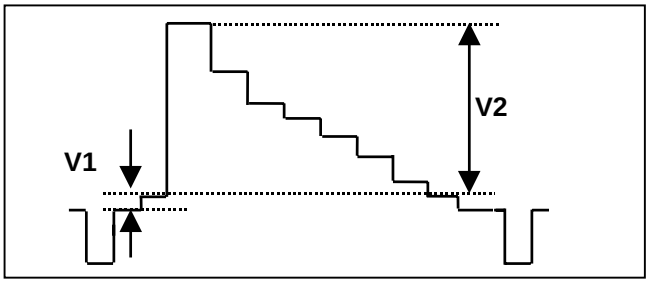

Component Y Level Adjustment

5-4. Component Pb Level Adjustment

C.B.A.	V IN (F7)
TP	VIDEO OUTPUT Pb (Component)
ADJ.	VR752, VR753
TAPE	-
INPUT	100% Color Bar (Component In)
MODE	EE
M. EQ	Wave Form Monitor
SPEC.	V1 = 0 mV ± 7 mV V2 = 714 mV ± 7mV

1. Adjust VR752 so that the V1 level is 0 mV ± 7 mV.
2. Adjust VR753 so that the V2 level is 714 mV ± 7 mV.

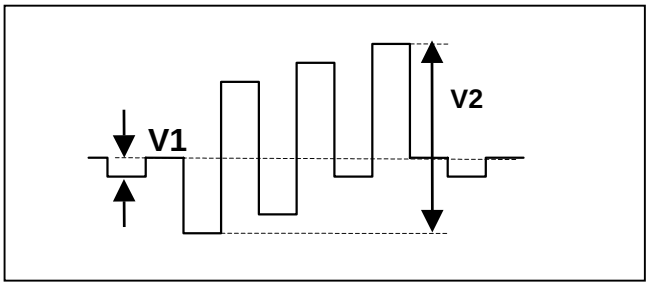

Component Pb Level Adjustment

5-5. Component Pr Level Adjustment

C.B.A.	V IN (F7)
TP	VIDEO OUTPUT Pr (Component)
ADJ.	VR802, VR803
TAPE	-
INPUT	100% Color Bar (Component In)
MODE	EE
M. EQ	Wave Form Monitor
SPEC.	V1 = 0 mV ± 7 mV V2 = 714 mV ± 7mV

1. Adjust VR802 so that the V1 level is 0 mV ± 7 mV.
2. Adjust VR803 so that the V2 level is 714 mV ± 7 mV.

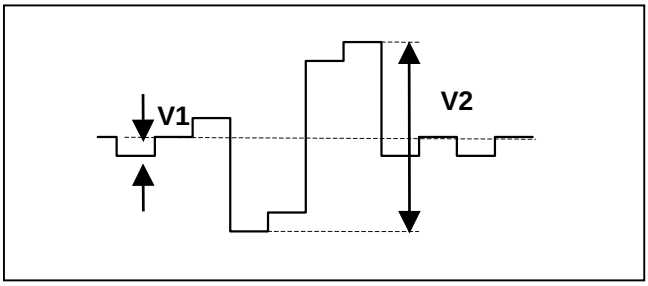

Component Pb Level Adjustment

5-6. Component Y/C Timing adjustment (2)

C.B.A.	V IN (F7)
TP	VIDEO OUTPUT Y.Pb,Pr (Component)
ADJ.	VR751, VR801
TAPE	-
INPUT	BOWTIE (Component In)
MODE	EE
M. EQ	Wave Form Monitor
SPEC.	T = 0 nsec ± 10 nsec

Wave Form Monitor Input Channel

B1ch : Y, B2ch : Pb, B3ch : Pr

<Y-Pb Timing Adjustment>
1. Set the Wave Form Monitor B1-B2 mode.
2. Adjust VR751 so that the cross point of envelope is at center.

<Y-Pr Timing Adjustment>
1. Set the Wave Form Monitor B1-B3 mode.
2. Adjust VR801 so that the cross point of envelope is at center.

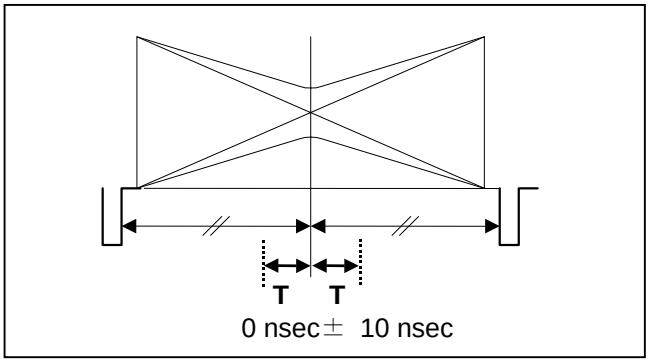

Component Y/C Timing Adjustment

5-7. Carrier Balance Adjustment

C.B.A.	V IN (F7)
TP	VIDEO OUTPUT 1 (Composite)
ADJ.	VR802, VR752
TAPE	-
INPUT	100% Color Bar (Component In)
MODE	EE
M. EQ	Wave Form Monitor
SPEC.	Carrier leak = Minimum

1. Adjust VR802 so that the Carrier leak of the part A is minimum.
2. Adjust VR752 so that the Carrier leak of the part A is minimum.

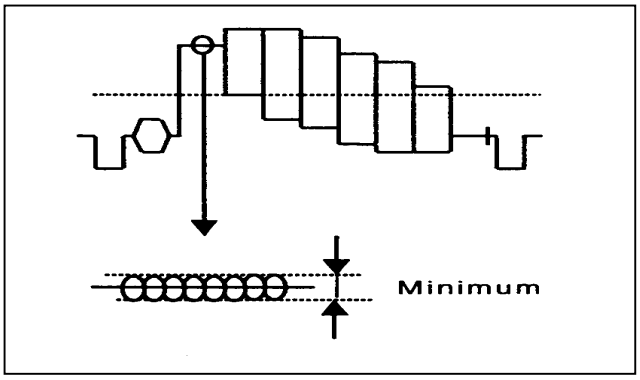

Carrier Balance Adjustment

5-8. Composite Y Level Adjustment

C.B.A.	V IN (F7)
TP	VIDEO OUTPUT Y (Component)
ADJ.	VR455
TAPE	-
INPUT	75% Color Bar, SETUP 7.5% (Composite In)
MODE	EE
M. EQ	Wave Form Monitor
SPEC.	V = 714 mV ± 7m V

1. Adjust VR455 so that the V level is 714 mV ± 7 mV.

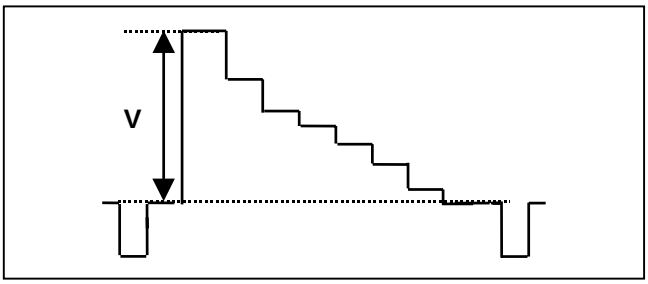

Composite Y Level Adjustment

5-9. Composite Pb Level Adjustment

C.B.A.	V IN (F7)
TP	VIDEO OUTPUT Pr (Component)
ADJ.	VR505
TAPE	-
INPUT	75% Color Bar, SETUP 7.5% (Composite In)
MODE	EE
M. EQ	Wave Form Monitor
SPEC.	V = 700 mV ± 7m V

1. Adjust VR505 so that the V level is 700 mV ± 7 mV.

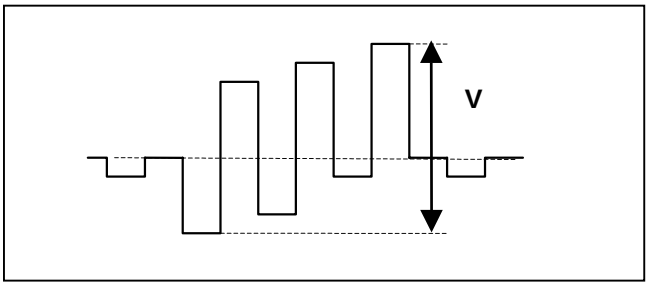

Composite Pb Level Adjustment

5-10.Composite Pr Level Adjustment

C.B.A.	V IN (F7)
TP	VIDEO OUTPUT Pr (Component)
ADJ.	VR511
TAPE	-
INPUT	75% Color Bar, SETUP 7.5% (Composite In)
MODE	EE
M. EQ	Wave Form Monitor
SPEC.	V = 700 mV ± 7m V

1. Adjust VR511 so that the V level is 700 mV ± 7 mV.

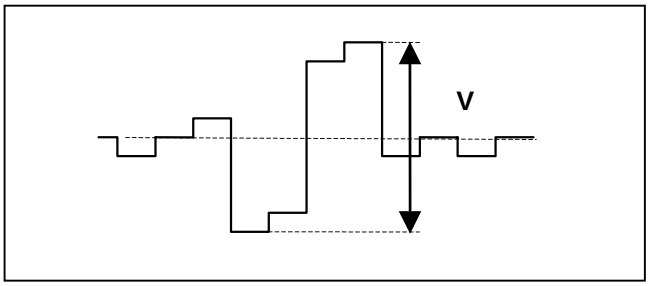

Composite Pr Level Adjustment

5-11.Composite Vector Adjustment

C.B.A.	V IN (F7)
TP	VIDEO OUTPUT 1 (Composite)
ADJ.	VR512, VR451
TAPE	-
INPUT	75% Color Bar, SETUP 7.5% (Composite In)
MODE	EE
M. EQ	Vector Scope
SPEC.	All vector dots are in inner boxes

1. Adjust VR3403,VR3301 and VR3302 so that the all vector dots are in the inner boxes.

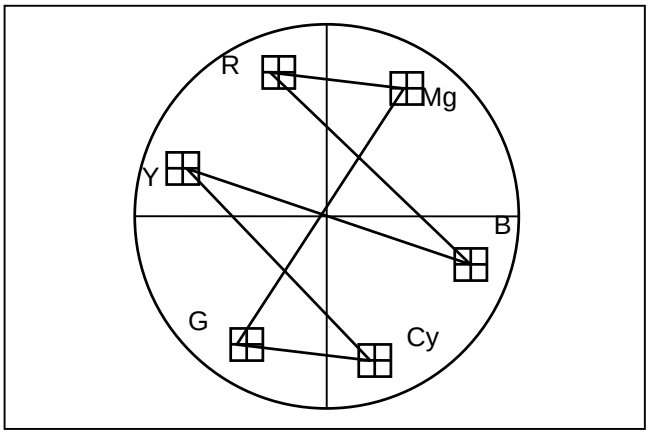

Composite Vector Adjustment

6. A_MONI_MIC(H5), A_AD(H6), A_DA(H7)

6-1. Connection of the Service Front Panel Unit
↓
6-2. Setting
↓
6-3. Monitor Output Level Adjustment
↓
6-4. Monitor Output Balance Adjustment
↓
6-5. MIC Input Level Adjustment
↓
6-6. CUE PB Level Adjustment
↓
6-7. CUE/CTL Erase Frequency Adjustment
↓
6-8. CUE/CTL Erase Current Adjustment
↓
6-9. Line Output Level Adjustment
↓
6-10. Line Output Balance Adjustment
↓
6-11. Input CMRR Adjustment
↓
6-12. Input Level Adjustment

6-1. Connection of the Service Front Panel Unit

Refer to **"7, *Connection of the Service Front Panel Unit"*** in ***"Section 2. Service Information"***.

6-2. Setting

A. AUDIO ANALYZER SETTING
(1) Set the audio precision as shown below.

AUDIO PRECISION	
GENERATOR OUTPUT	LINE Adjustment: 40Ω / dB u （A&B, BAL, GND） MIC Adjustment : 20Ω / dB u （A&B, UNBAL, FLOAT）
ANALYZE CHA INPUT	100KΩ / dB u
ANALYZE CHB INPUT	100KΩ / dB u

B. Service Front Panel Unit Setting

(1) Set the Switch of the Service Front Panel Unit as shown below.

- CONTROL : LOCAL
- MODE : TAPE
- MONITOR SELECT
  - LCH : CH1
  - RCH : CH2
- Audio Input/Output Level Control VR
  - All REC VR : UNITY
  - All PB VR : UNITY
- INSERT buttons

ASMBL	: OFF	VIDEO	: ON
CH1	: OFF	CH2	: ON
CH3	: OFF	CH4	: OFF
CUE	: ON	TC	:OFF

C. Service Menu Setting

(1) Set the DIP SW1-1 on the backside of front panel to ON, and open the Service Menu and set the items as shown below

G00:AUDIO ADJUST
- G01:REF LEVEL1 : Fs-20
- G02:REF LEVEL2 : 0dB
- G03:REF LEVEL3 : 0dB
- G05 : MIC_IN_LEVEL : ENA

(2) Set the DIP SW1-1 to OFF.

D. User Menu Setting

Open the Service Menu and set the items as shown below

700	INT SG	OFF
701	CH1 IN LV	0dB
702	CH2 IN LV	0dB
703	CH3 IN LV	0dB
704	CH4 IN LV	0dB
706	CH1 OUT LV	0dB
707	CH2 OUT LV	0dB
708	CH3 OUT LV	0dB
709	CH4 OUT LV	0dB
710	CUE OUT LV	0dB
711	MONIL OUT LV	0dB
712	MONIR OUT LV	0dB
713	MONI OUT	UNITY
714	EMPHASIS	OFF
715	CH1 IN SEL	ANA
716	CH2 IN SEL	ANA
717	CH3 IN SEL	ANA
718	CH4 IN SEL	ANA
719	D IN SEL12	AES
720	D IN SEL34	AES
721	MONI CH SEL	AUTO1
722	REC CH1	CH1
723	REC CH2	CH2
724	REC CH3	CH3
725	REC CH4	CH4
730	MONI MIX R	OFF
731	CUE OUT SEL	OFF
732	CUE SLOW	STEP
733	CUE OUT	NORMAL
734	MONI SEL INH	OFF
735	MONI AUTO SEL	L/R
736	AUDIO PB VR	DIS
737	JOG PROC	ON
750	DV PB ATT	ON
751	REC PT MUTE	OFF
760	A IN SEL12	CH12
761	A IN SEL34	CH34
762	MIC IN	UNITY
763	MIC EMP	OFF

6-3. Monitor Output Level Adjustment

C.B.A.	A MONI MIC (H5)
TP	AUDIO MONI OUT (LCH, RCH)
ADJ.	VR101 [L OUT LEVEL] (D-2) VR102 [R OUT LEVEL] (B-2)
TAPE	-
INPUT	1 kHZ -20 dB FS (DIGITAL AUDIO IN)
MODE	EE
M. EQ.	Audio Precision
SPEC.	+4 dB u ± 0.2 dB u

1. Set the Switch of the Service Front Panel Unit.

   INSERT CUE = ON :EE
   CH3 = OFF :Digital Input
   CH4 = ON

2. .Adjust VR402 so that the CH1 waveform level is within the specification.
3. Repeat the above adjustment in the same way for other Audio channel.
4. Confirm that the all channels output is normal sine wave.

6-4. Monitor Output Balance Adjustment

C.B.A.	A MONI MIC (H5)
TP	AUDIO MONI OUT (LCH, RCH)
ADJ.	VR201 [LCH BAL] (D-4) VR202 [RCH BAL] (B-4)
TAPE	-
INPUT	1 kHZ -20 dB FS (DIGITAL AUDIO IN)
MODE	EE
M. EQ.	Audio Precision
SPEC.	Waveform Level = Minimum

1. Connect oscilloscope as shown below.
   CH1 : HOT
   CH2 : COLD
   Scope Mode : ADD

2. Adjust VR201 so that the CH L waveform level is minimum.
3. Repeat the above adjustment in the same way for other Audio channel. (Refer to above table.)
4. Confirm that the all channels sine wave output is normal.

6-5. MIC Input Level Adjustment

C.B.A.	A MONI MIC (H5)
TP	AUDIO MONI OUT (LCH)
ADJ.	VR51 [MIC IN LEVEL] (E-3)
TAPE	-
INPUT	Sin wave [UNBALANCE - FLOAT] (MIC)
MODE	EE
M. EQ.	Oscilloscope, Audio Analyzer
SPEC.	0 dBu ± 0.2 dBu

Audio Analyzer Setting

∗ MEASURE : AMPLITUDE
∗ FILTER : A-Weighting
∗ BANDWIDTH : <10Hz, 22kHz

1. Set the Switch of the Service Front Panel Unit as shown below.
   INSERT CUE = OFF :PB
   CH1 = OFF
   CH3 = ON :MIC Input
   CH4 = OFF

2. Set the USER menu as shown below.
   AUDIO 762 MIC IN = UNITY

3. Adjust VR51 so that the CH L Output Level is within the specification.
4. Set the USER menu as shown below.
   AUDIO 762 MIC IN = FIX

6-6. CUE PB Level Adjustment

C.B.A.	A MONI MIC (H5)
TP	AUDIO MONI OUT (LCH)
ADJ.	VR4001 [REC_CURR] (D-1)
TAPE	VFM3380KM 100% Color Bar (1 KHz, 0 dB)
INPUT	-
MODE	PLAY
M. EQ.	Audio Analyzer
SPEC.	0 dBu ± 0.5 dBu

1. Set the Switch of the Service Front Panel Unit as sown below.
   MONITOR SELECT-LCH = CUE

2. Set the USER menu as shown below.
   BASIC 012 SYS FORMAT = 50M

3. Playback the CUE level master tape, and adjust VR4001 so that the CUE OUT level is within the specification.
4. Set the Switch of the Service Front Panel Unit as sown below.
   MONITOR SELECT-LCH = CH1

6-7. CTL/CUE Erase Frequency Adjustment

C.B.A.	A MONI MIC (H5)
TP	TP2 (C-1), TG1 [GND] (C-1)
ADJ.	T1 (B-1)
TAPE	REC/PB Tape
INPUT	-
MODE	REC
M. EQ.	Frequency Counter
SPEC.	f = 70KHz ± 0.2KHz

1. Recorded the REC/PB tape.
2. Adjust T1 so that the frequency f is within the specification.

6-8. CTL/CUE Erase Current Adjustment

C.B.A.	A MONI MIC (H5)
TP	TP4102 [CUE ERACE] (C-1) TP4103 [CTL ERACE] (C-1) TG4101 [GND] (C-1)
ADJ.	T4102 [CUE ERACE] (C-1) T4103 [CTL ERACE] (D-1)
TAPE	REC/PB Tape
INPUT	-
MODE	REC PLAY
M. EQ.	Oscilloscope
SPEC.	A = 240mVp-p ± 50 mV

1. Recorded the REC/PB tape.
2. Confirm that the voltage at TP4102 is within the specification. If it is not, adjust T4102 so that the Erase Current level A is within the specification.
3. Confirm that the voltage at TP4103 is within the specification. If it is not, adjust T4103 so that the Erase Current level A is within the specification.

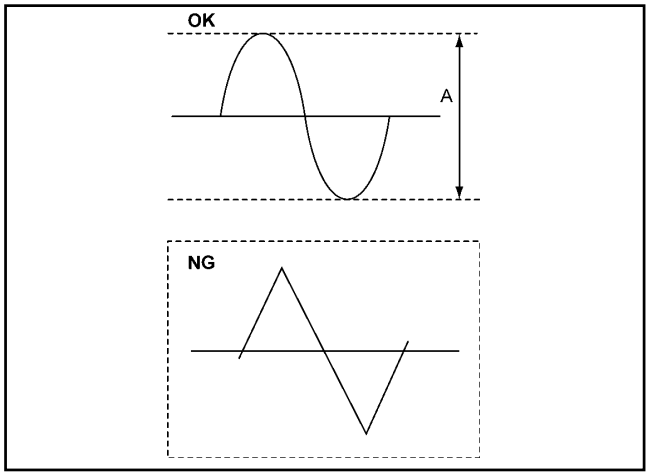

6-9. Line Output Level Adjustment

C.B.A.	A_DA (H6)
TP	AUDIO OUT (CH1, CH2, CH3, CH4)
ADJ.	VR4501 [CH1 OUT LEVEL] (E-3) VR4502 [CH2 OUT LEVEL] (D-3) VR4601 [CH3 OUT LEVEL] (C-3) VR4602 [CH4 OUT LEVEL] (B-3)
TAPE	-
INPUT	1 kHZ -20 dBSF (DIGITAL AUDIO IN)
MODE	PLAY
M. EQ.	Audio Precision
SPEC.	0 dB u ± 0.2 dB u

1. Set the Switch of the Service Front Panel Unit.

   INSERT CUE = ON :EE
   CH3 = OFF :Digital Input
   CH4 = ON

2. .Adjust VR4501 so that the CH1 waveform level is within the specification.
3. Repeat the above adjustment in the same way for other Audio channels.
4. Confirm that the all channels output is normal sine wave.

6-10.Line Output Balance Adjustment

C.B.A.	A DA (H6)
TP	AUDIO OUT (CH1, CH2, CH3, CH4)
ADJ.	VR4503 [CH1 BAL] (D-3) VR4504 [CH2 BAL] (C-3) VR4603 [CH3 BAL] (C-3) VR4604 [CH4 BAL] (B-3)
TAPE	-
INPUT	1 kHZ -20 dBSF (DIGITAL AUDIO IN)
MODE	EE
M. EQ.	Audio Precision
SPEC.	Waveform Level = Minimum

1. Set the Service Front Panel Unit as shown bellow.

   INSERT CUE = ON :EE
   CH3 = OFF :Digital Input
   CH4 = ON

2. Connect to oscilloscope as shown below.
   CH1 : HOT
   CH2 : COLD
   Scope Mode : ADD

3. Adjust VR4503 so that the CH1 waveform level is minimum.
5. Repeat the above adjustment in the same way for other Audio channels.
   (Refer to above table.)
6. Confirm that the all channels output is normal sine wave.

6-11.CMRR Adjustment

C.B.A.	A_AD (H7)
TP	AUDIO OUT (CH1, CH2, CH3, CH4)
ADJ.	VR4001 [CH1 CMR] (E-4) VR4051 [CH2 CMR] (D-4) VR4101 [CH3 CMR] (C-4) VR4151 [CH4 CMR] (B-4)
TAPE	-
INPUT	AUDIO IN (CH1, CH2, CH3, CH4) 4dB/1kHz Sin wave (CMTST)
MODE	EE
M. EQ.	Monitor TV, VTVM, Audio Analyzer
SPEC.	Less than –50 dB r

SW Setting (A_AD Board)
SW51: HIGH, SW151 : HIGH

1. Set the SW of the Service Front Panel Unit.

   INSERT CUE = ON :EE
   CH3 = OFF :Digital Input
   CH4 = ON

2. Set the GENERATOR OUTPUT of the Audio Analyzer to “CMTST” from “BAL”.
3. Input the 0dBu/1kHz Sine wave (CMTST) to every channels.
4. Adjust VR4001 so that the CH1 output level is minimum.
5. Repeat an adjustment in the same way for other Audio channels.

6-12.Input Level Adjustment

C.B.A.	A_AD (H7)
TP	DIGITAL AUDIO OUT (CH1, CH2, CH3, CH4)
ADJ.	VR4002 [CH1 IN LEVEL] (E-3) VR4052 [CH2 IN LEVEL] (D-3) VR4102 [CH3 IN LEVEL] (C-3) VR4152 [CH4 IN LEVEL] (B-3)
TAPE	-
INPUT	AUDIO IN (CH1, CH2, CH3, CH4) 4dB/1kHz Sine wave (BAL)
MODE	EE
M. EQ.	Audio Analyzer, Oscilloscope
SPEC.	-20dB FS ± 0.2 dB

1. Set the SW of the Service Front Unit as shown bellow.

   INSERT CUE = ON :EE
   CH3 = OFF :Digital Input
   CH4 = ON

2. Adjust VR4002 so that the CH1 output level is within the specification.
3. Repeat an adjustment in the same way for other Audio channels.

7. LOCATION OF TEST POINTS & CONTROLS

F1:SERVO P.C. BOARD

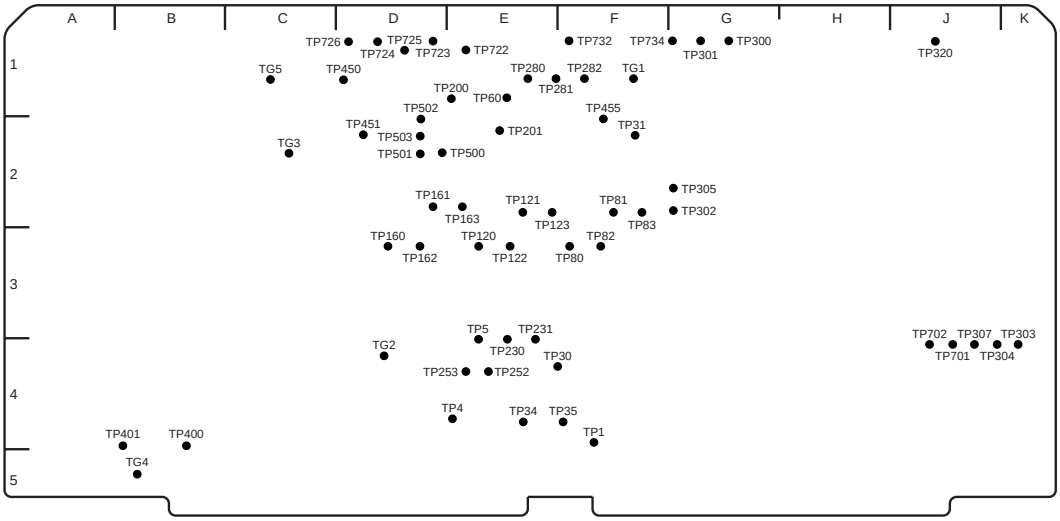

F2:SYSCON P.C. BOARD

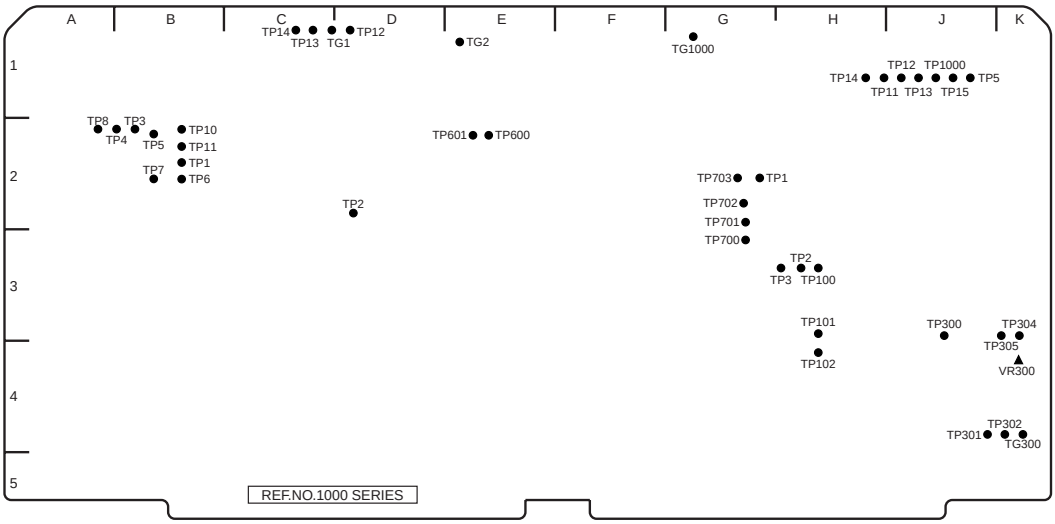

F4:REC PB P.C. BOARD

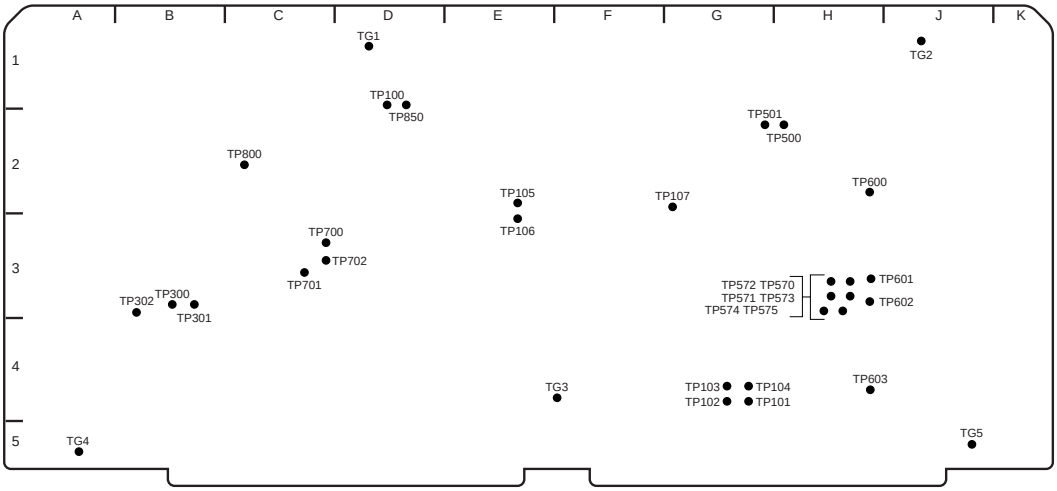

F5: V OUT P.C. BOARD

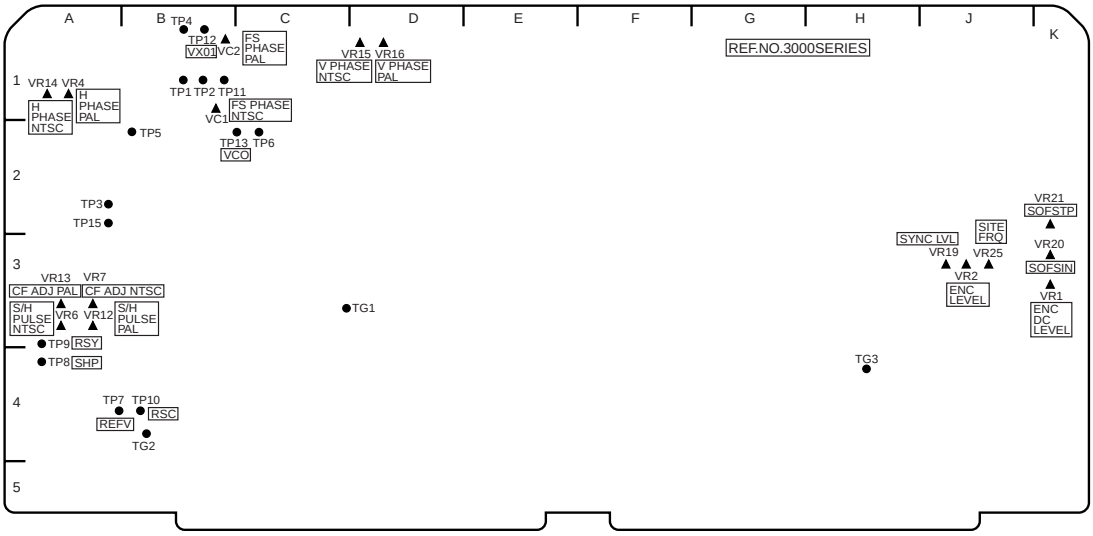

F5 SUB: 422/844 DA P.C. BOARD

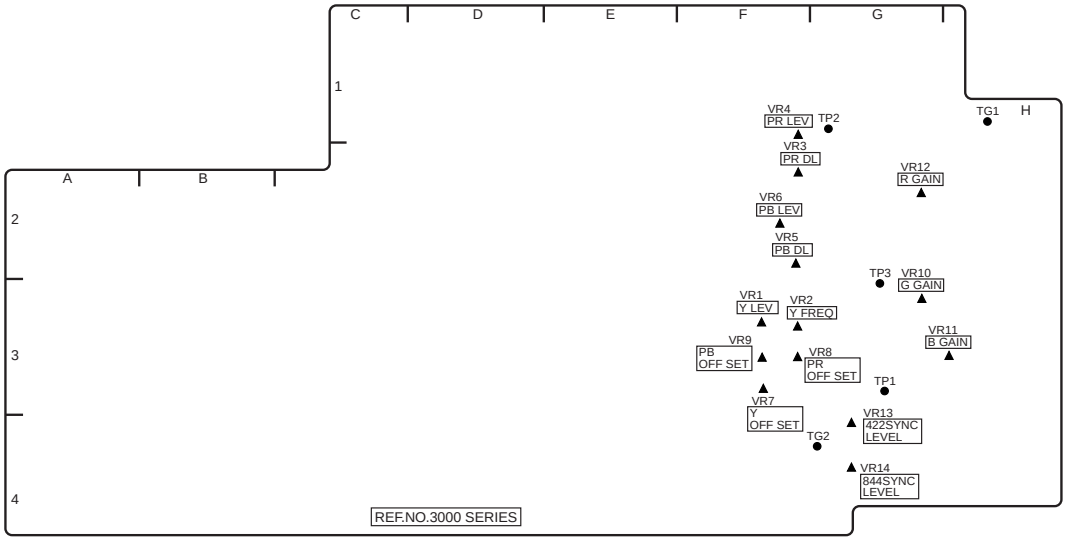

F6: A PROC P.C. BOARD

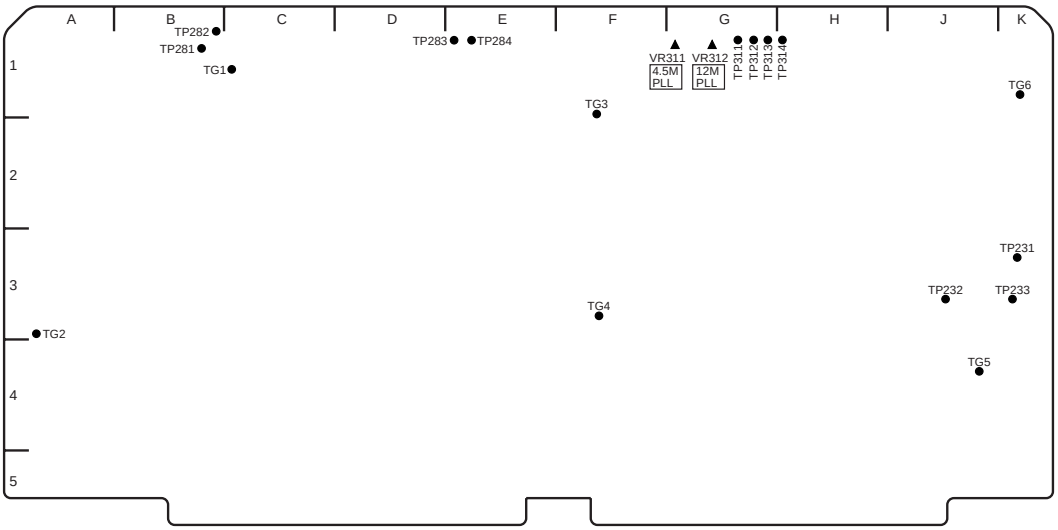

F7: VIDEO IN P.C. BOARD

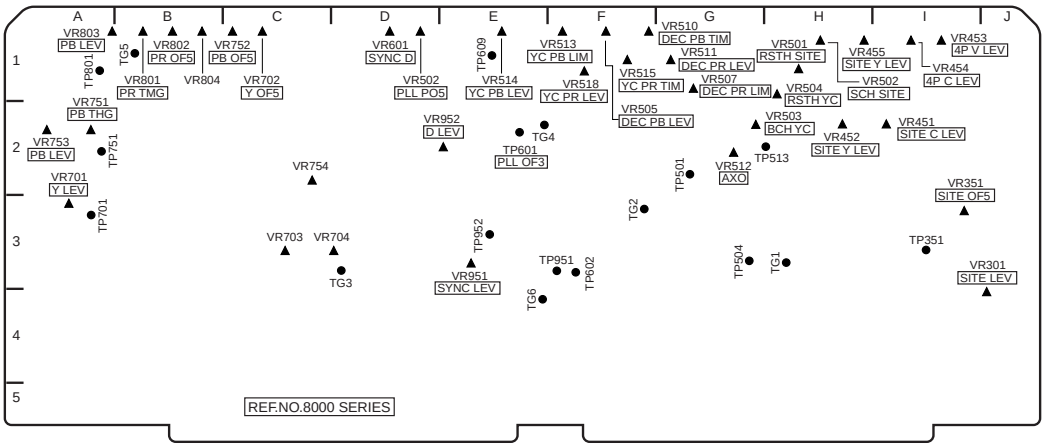

H1: EQ1 P.C. BOARD
H2: EQ2 P.C. BOARD

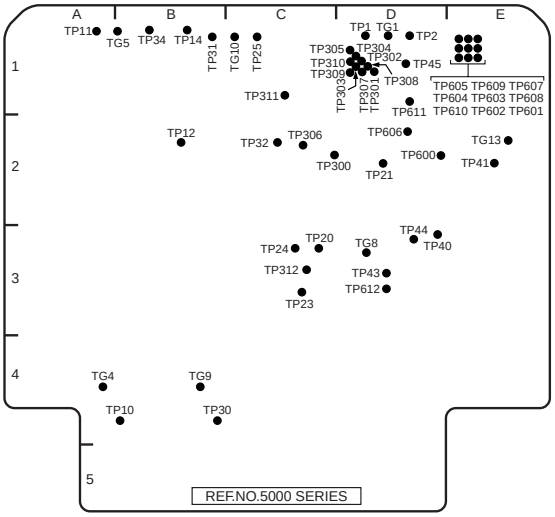

H3: EQ MAIN P.C. BOARD

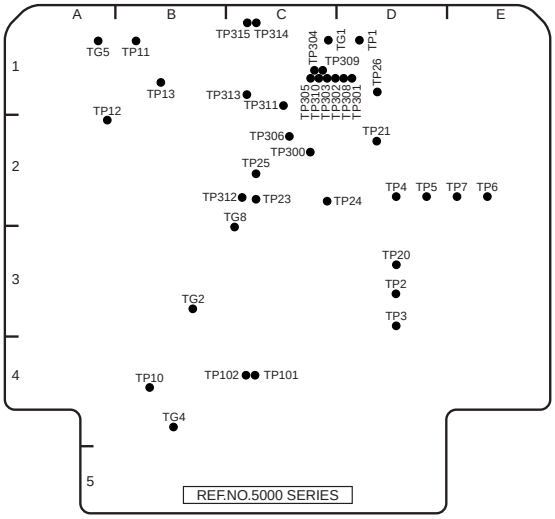

H5: A MON MIC P.C. BOARD

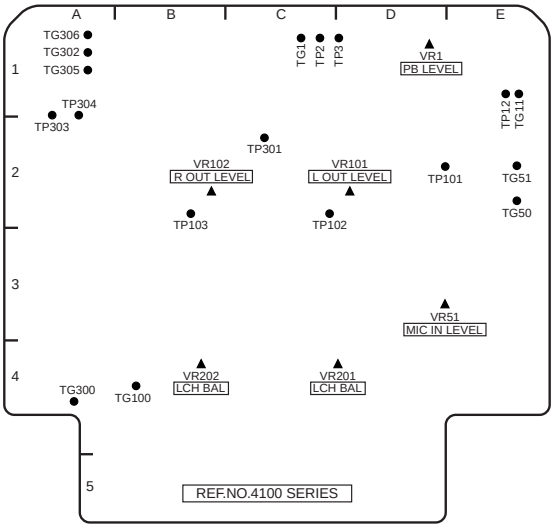

H6: A DA P.C. BOARD

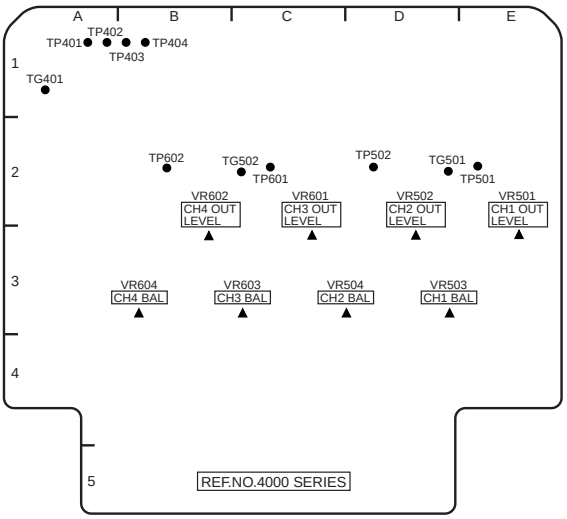

H7: A AD P.C. BOARD

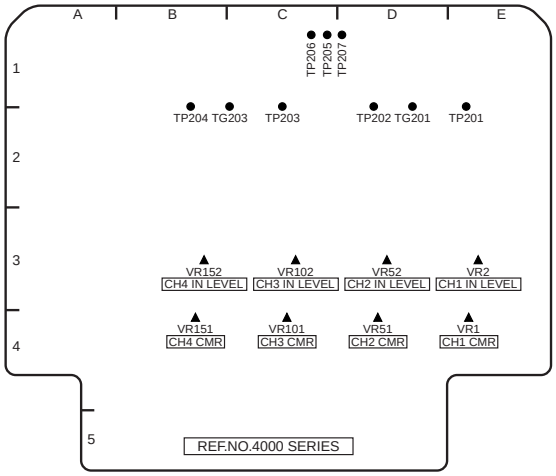

HEAD BUFFER P.C. BOARD

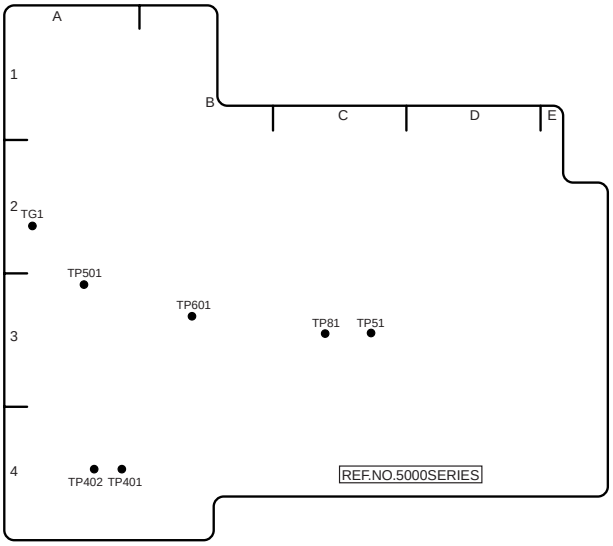

MECHA I/F P.C. BOARD

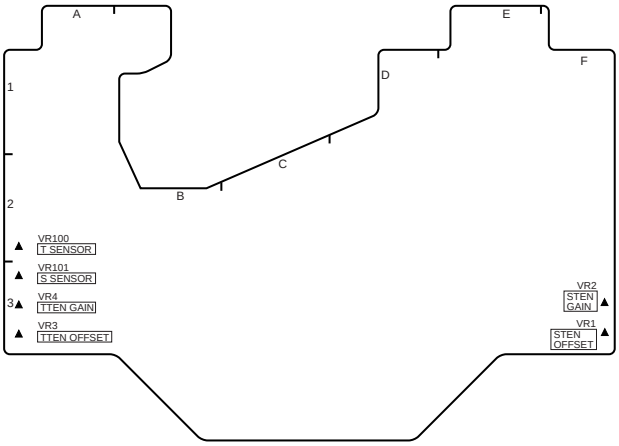

POWER2 P.C. BOARD

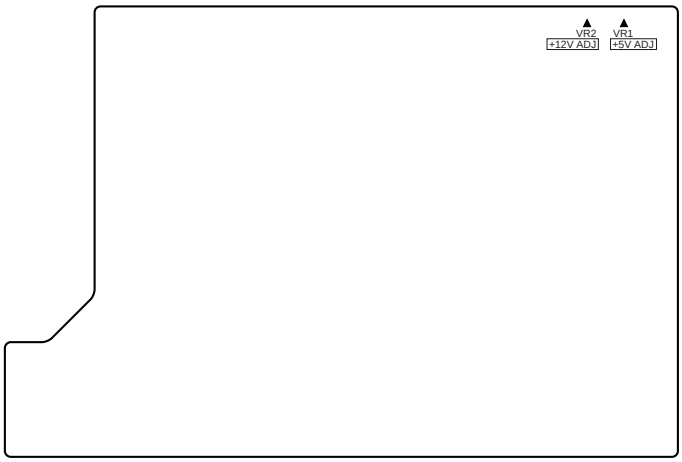

SECTION 6

BLOCK DIAGRAMS

CONTENTS

OVERALL BLOCK DIAGRAM BLK-1
F1:SERVO BLOCK DIAGRAM..... BLK-3
F2:SYSCON BLOCK DIAGRAM BLK-5
F4:REC PB BLOCK DIAGRAM..... BLK-7
F5:V OUT BLOCK DIAGRAM BLK-9
F6:A PROC BLOCK DIAGRAM BLK-13
F7:VIDEO IN BLOCK DIAGRAM BLK-15
H3:EQ MAIN BLOCK DIAGRAM BLK-17
H1,H2:EQ1,EQ2 BLOCK DIAGRAM..... BLK-19
HEAD BUFFER1 BLOCK DIAGRAM..... BLK-21
HEAD BUFFER2 BLOCK DIAGRAM..... BLK-22
H5:A MAIN BLOCK DIAGRAM BLK-24
H7:A AD BLOCK DIAGRAM..... BLK-24
H6:A DA BLOCK DIAGRAM BLK-26

OVER ALL BLOCK DIAGRAM

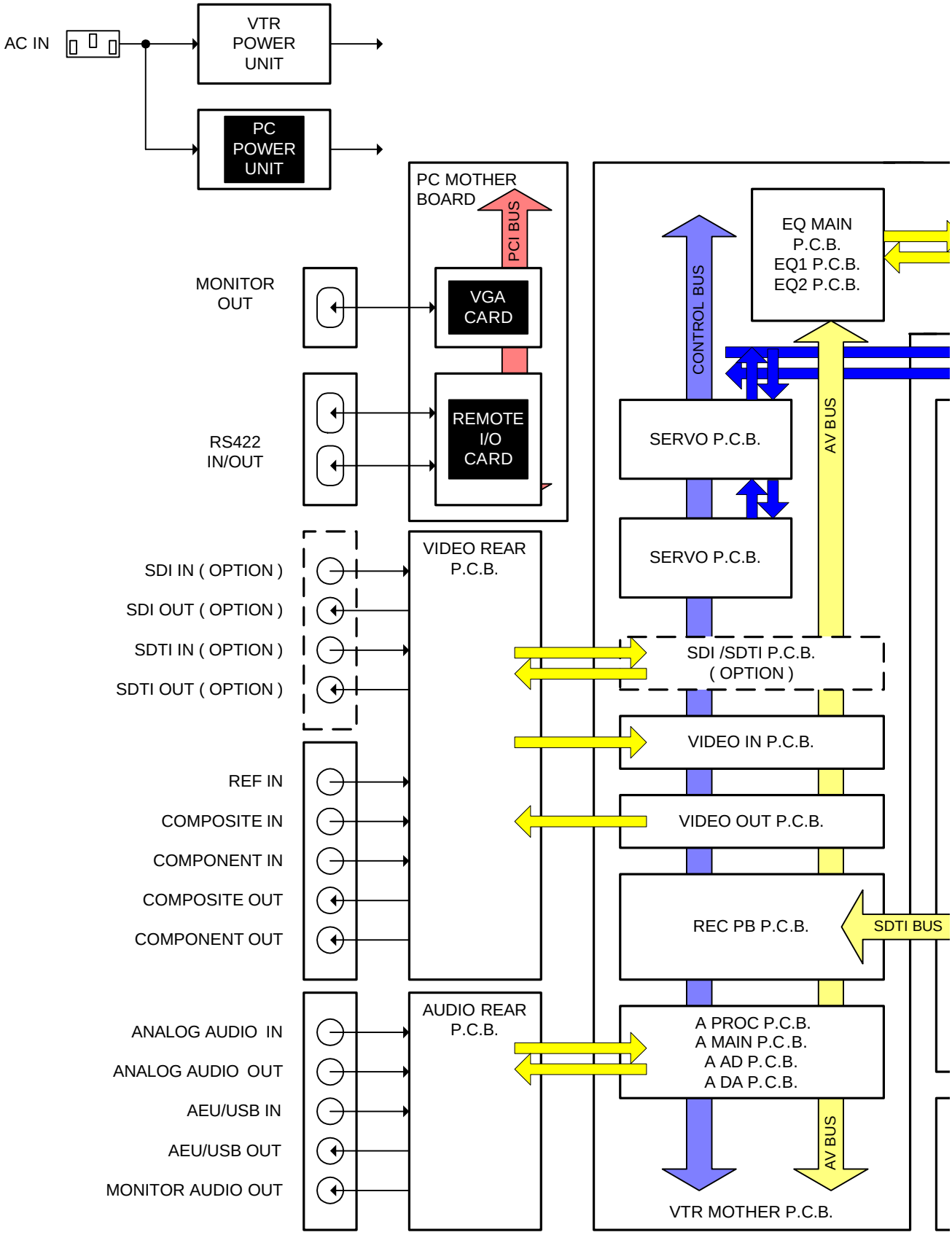

OVER ALL BLOCK DIAGRAM

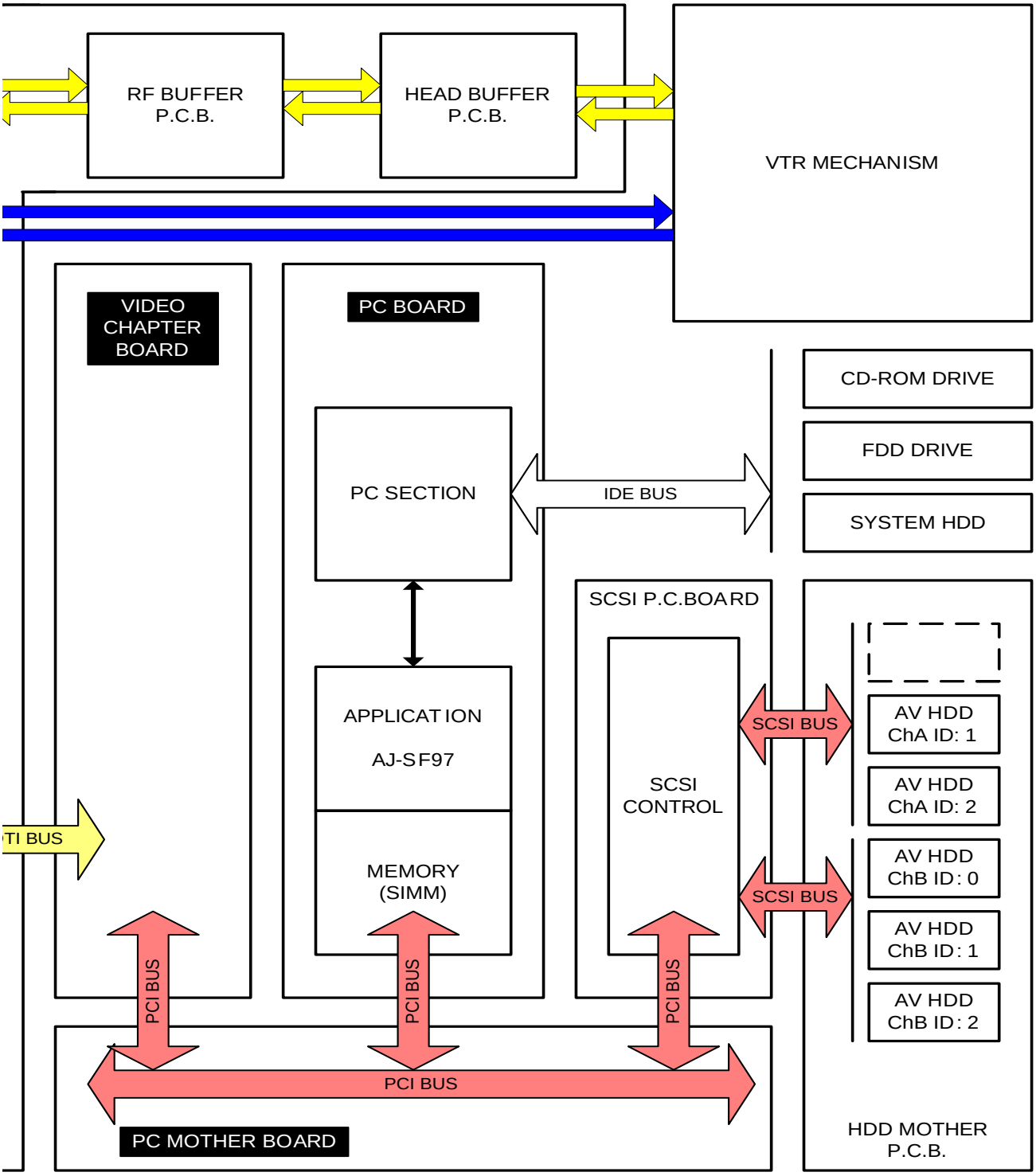

F1:SERVO BLOCK DIAGRAM

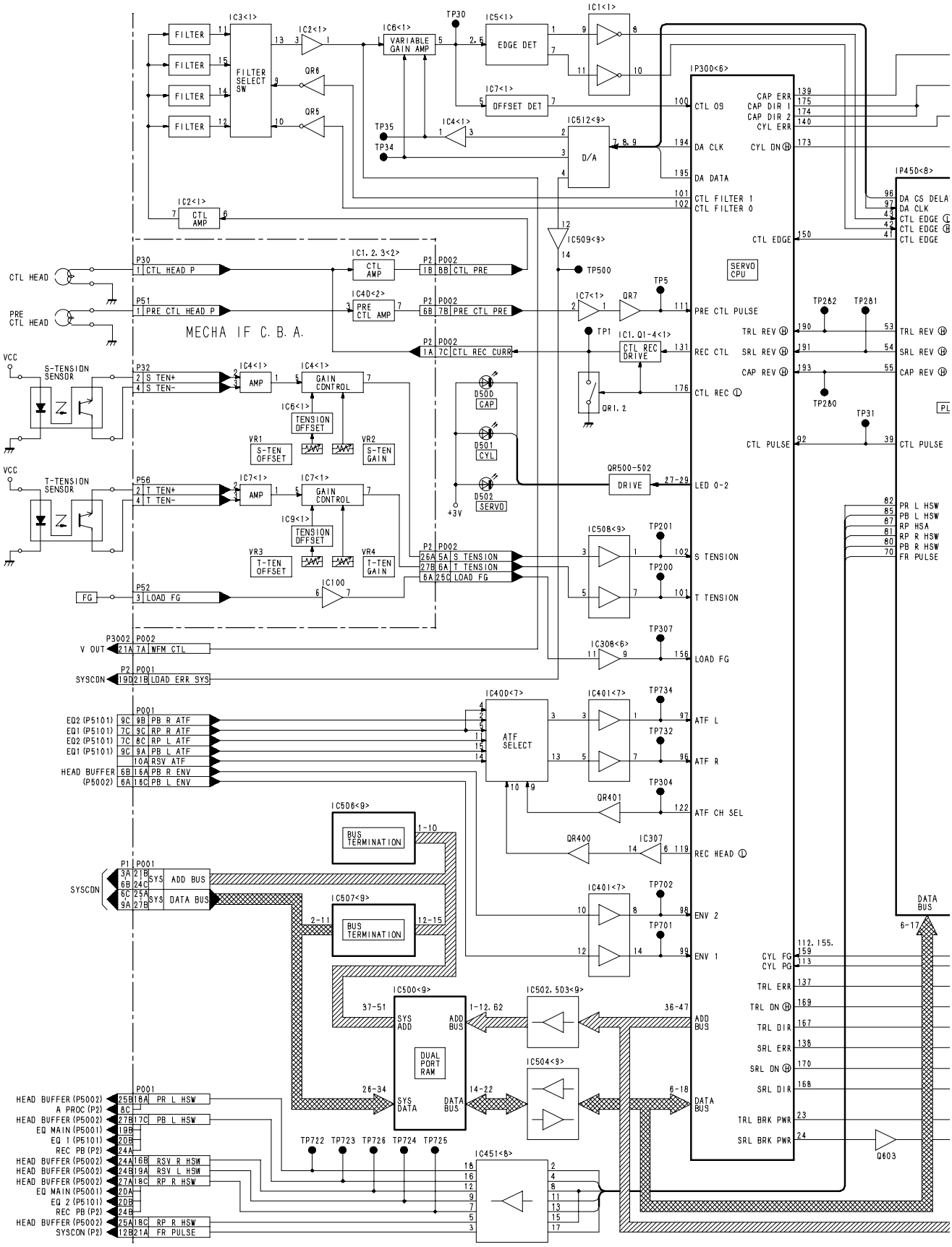

F1:SERVO BLOCK DIAGRAM

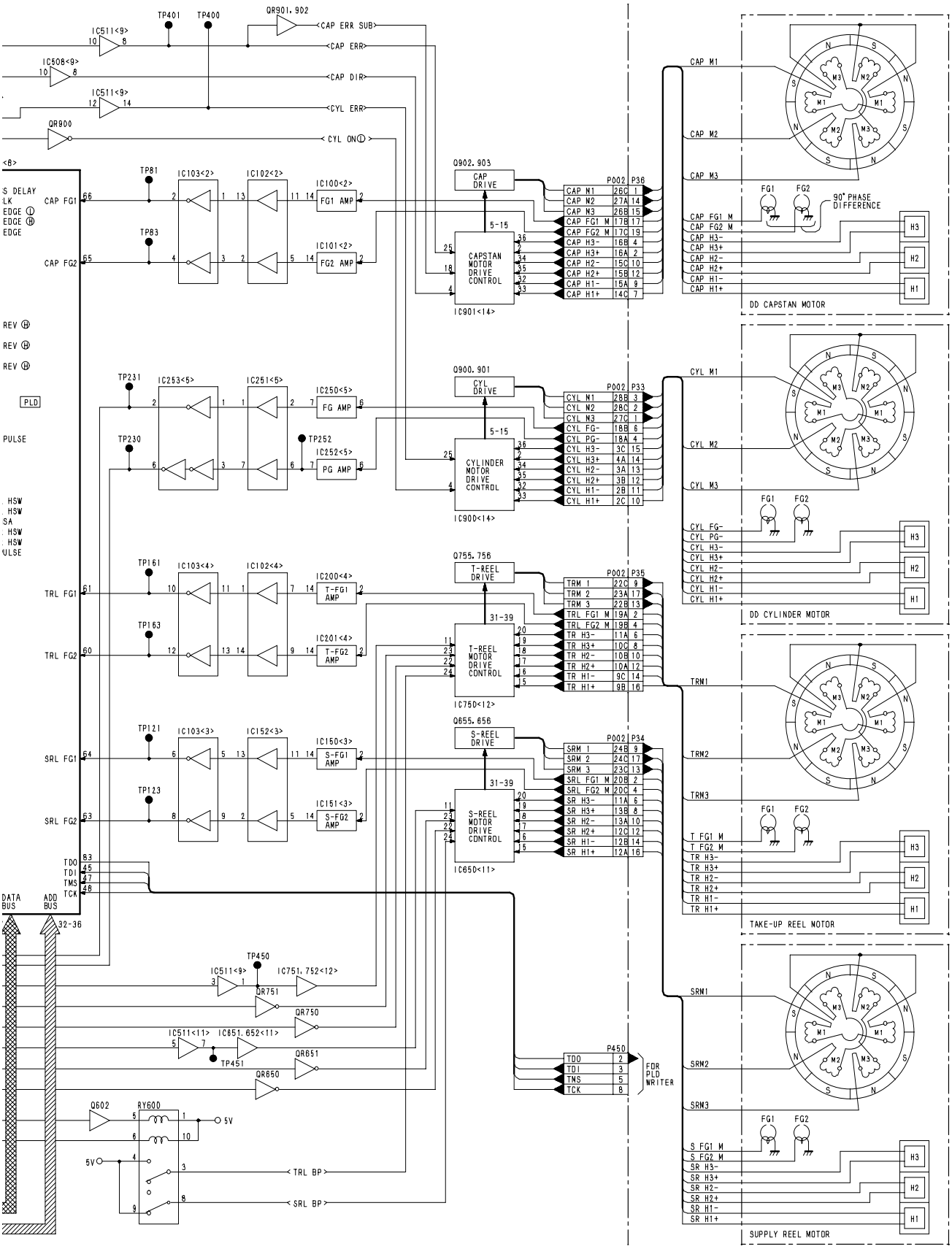

F2:SYSCON BLOCK DIAGRAM

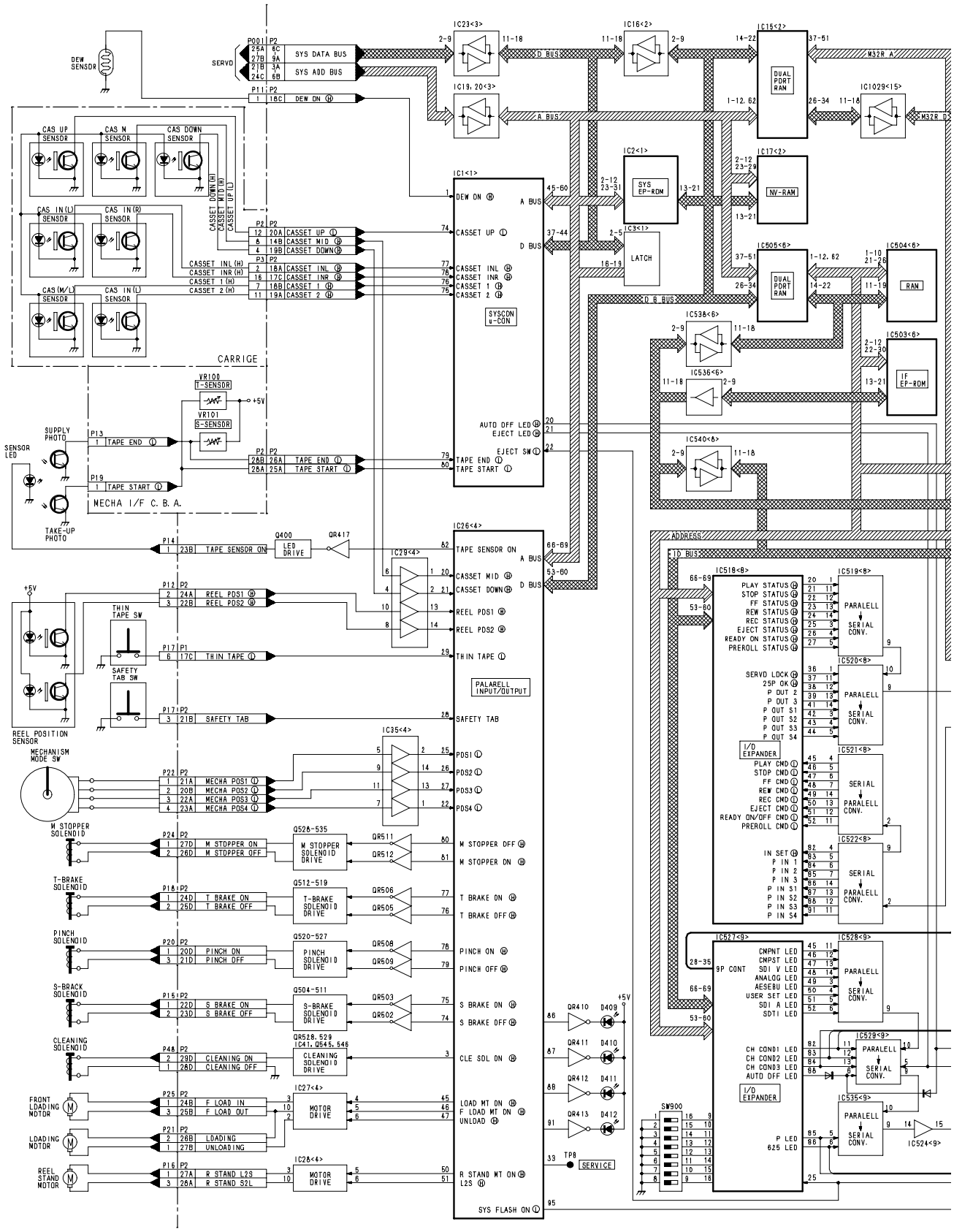

F2:SYSCON BLOCK DIAGRAM

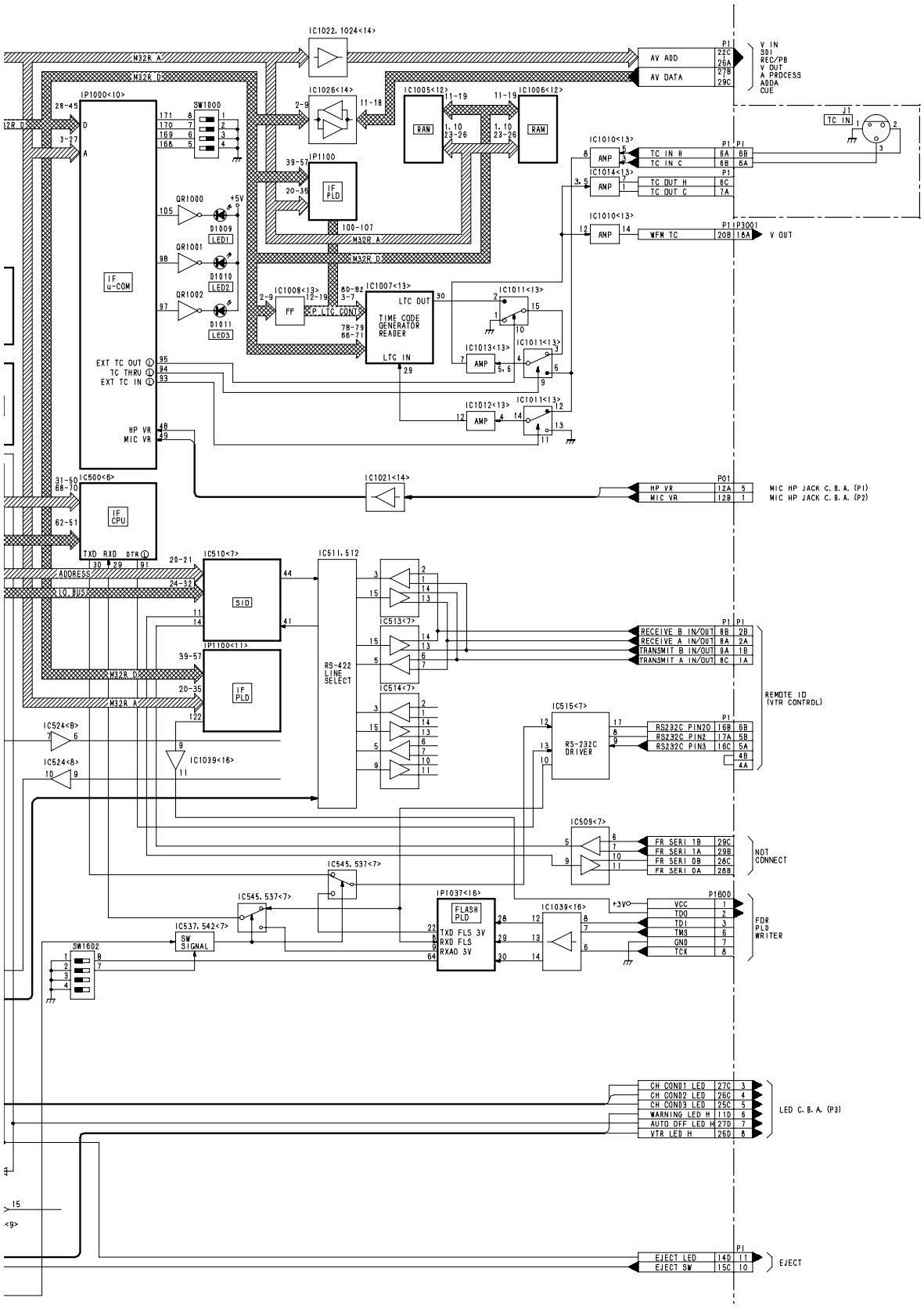

F4:REC PB BLOCK DIAGRAM

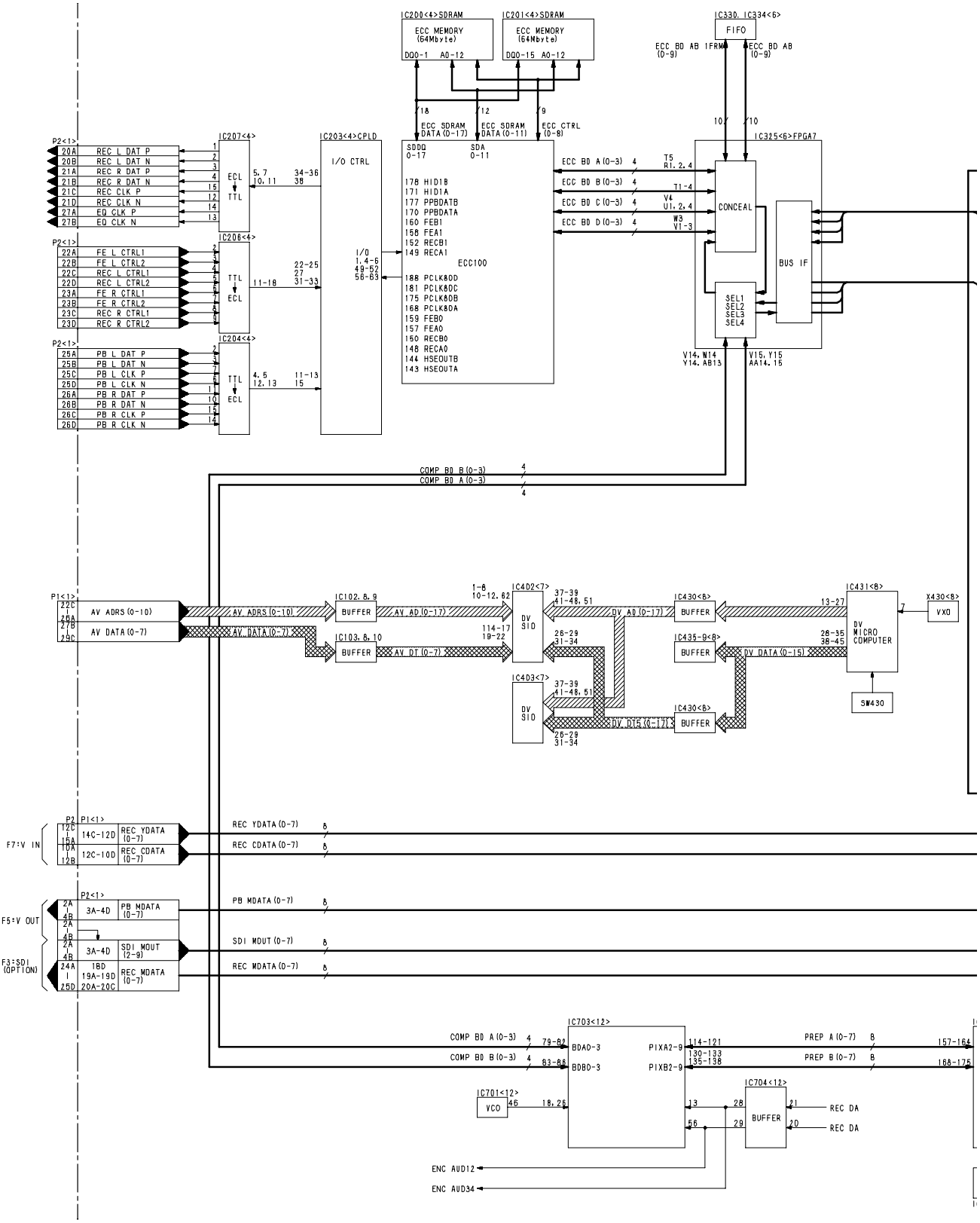

F4:REC PB BLOCK DIAGRAM

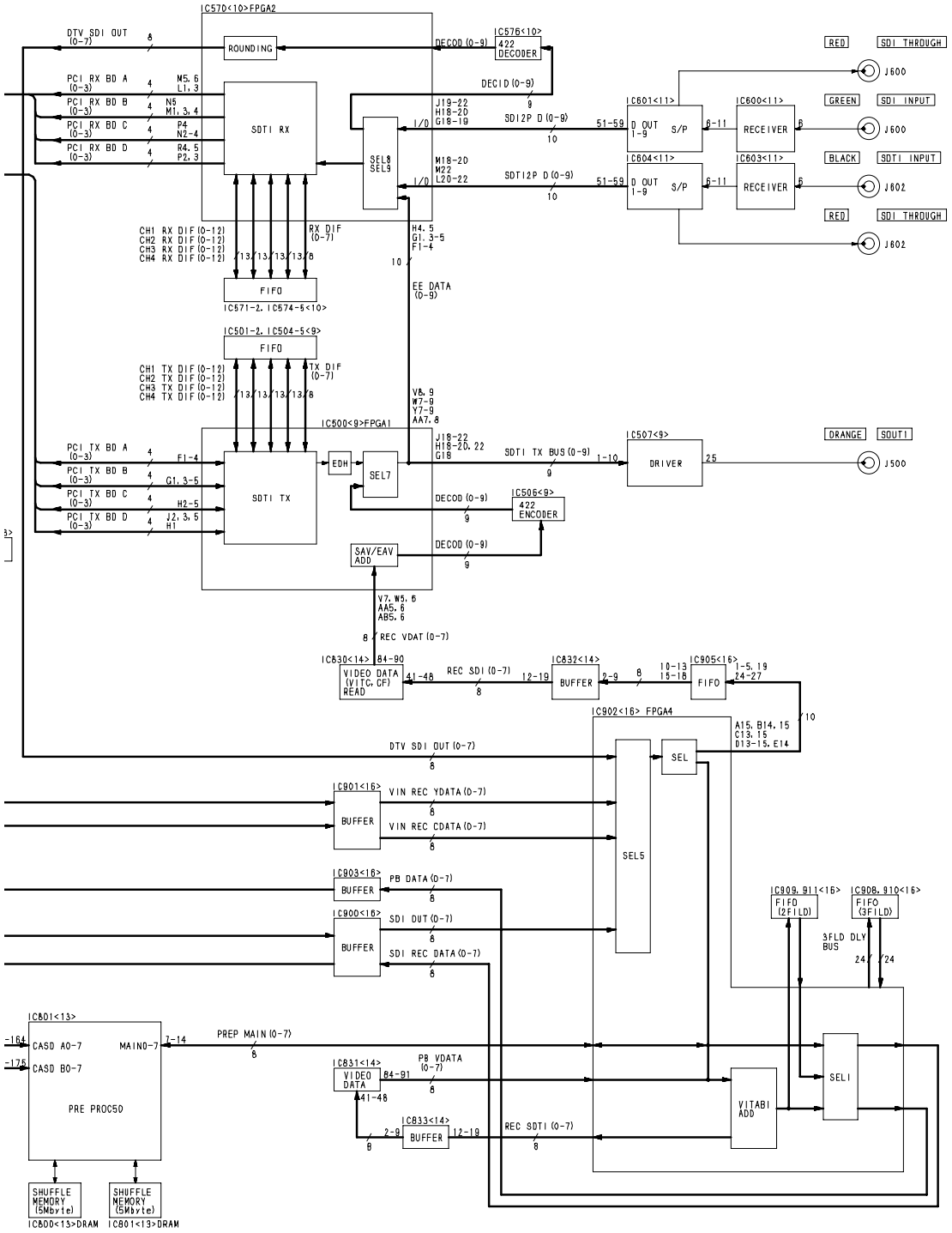

F5:V OUT BLOCK DIAGRAM

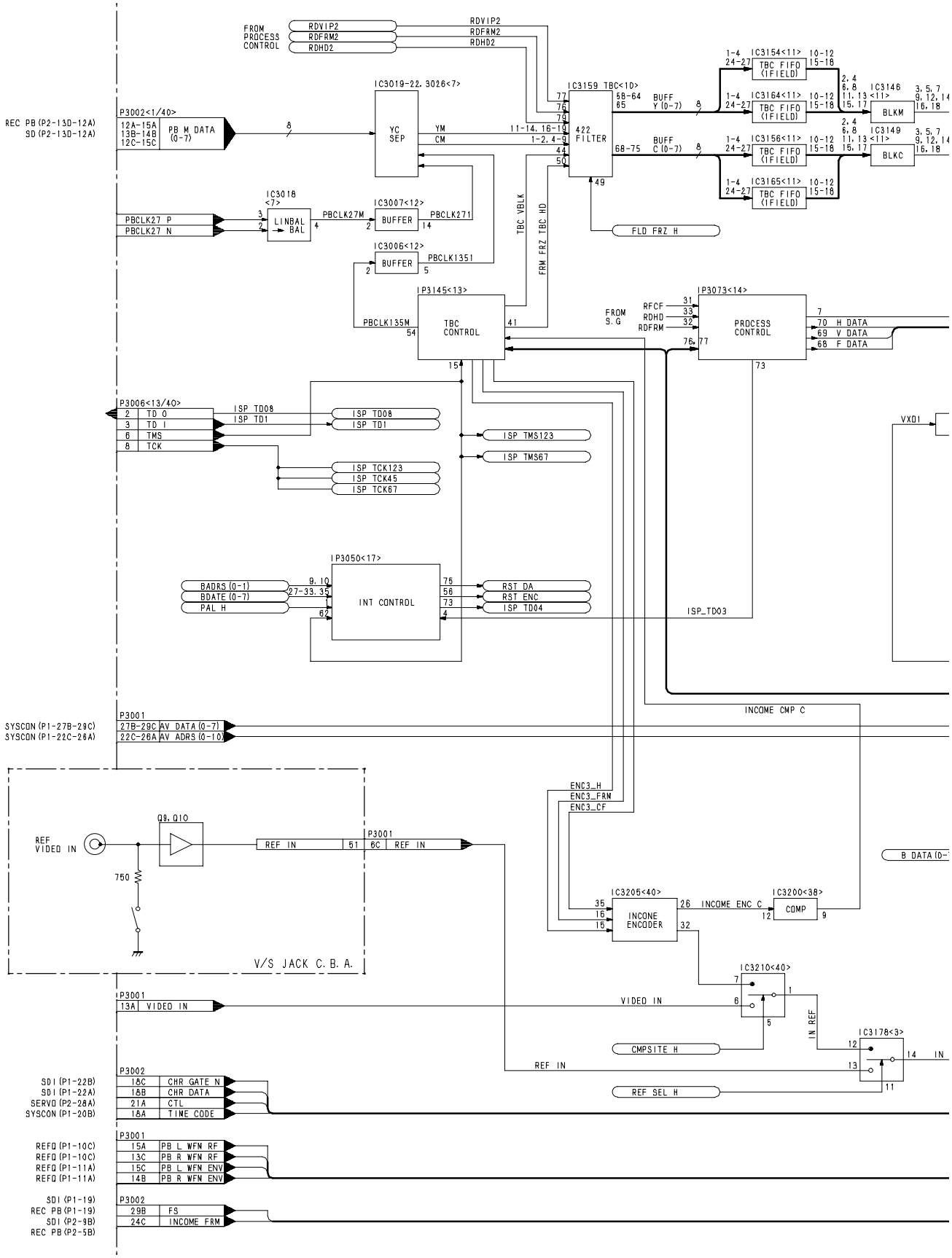

F5:V OUT BLOCK DIAGRAM

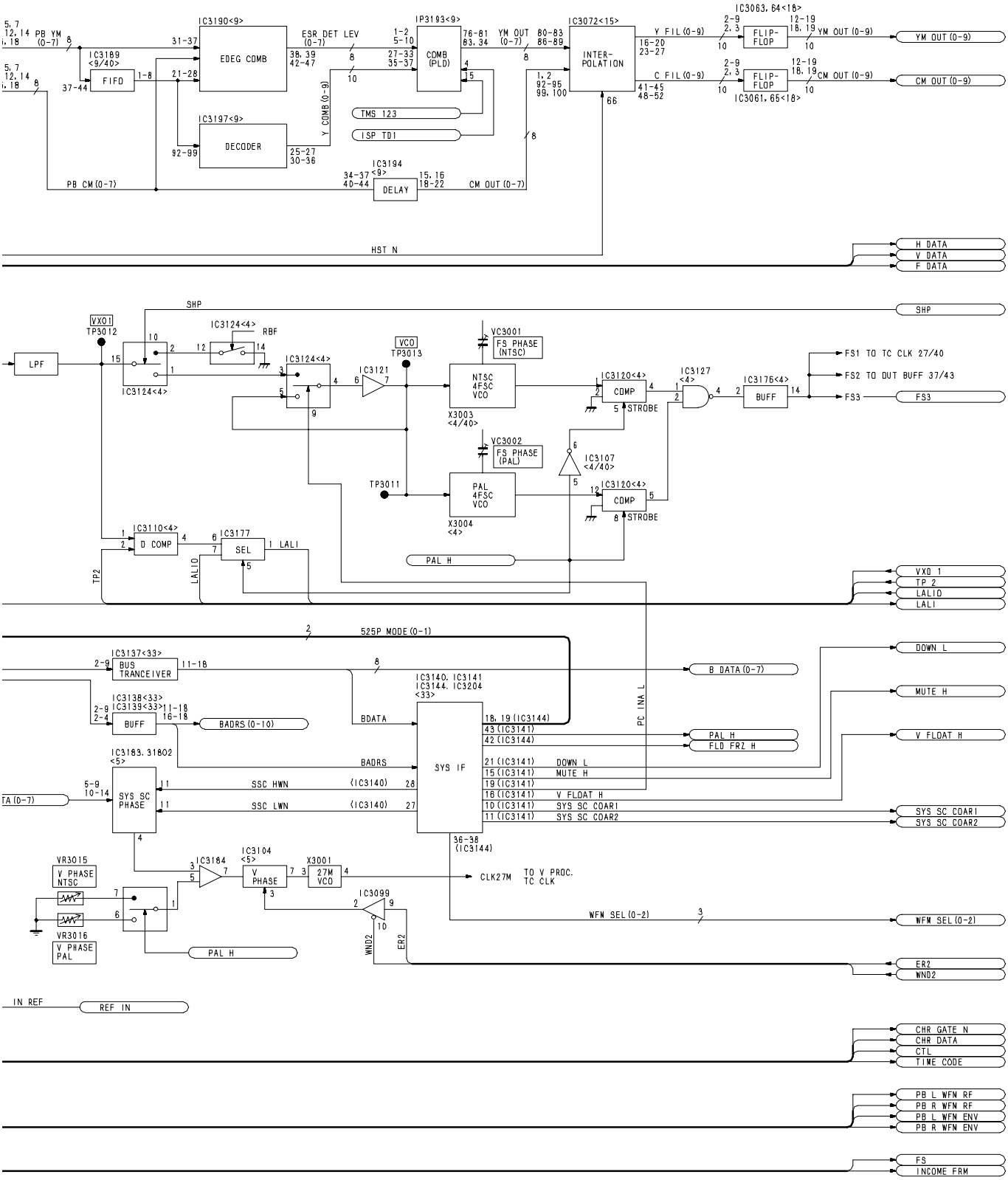

F5:V OUT BLOCK DIAGRAM

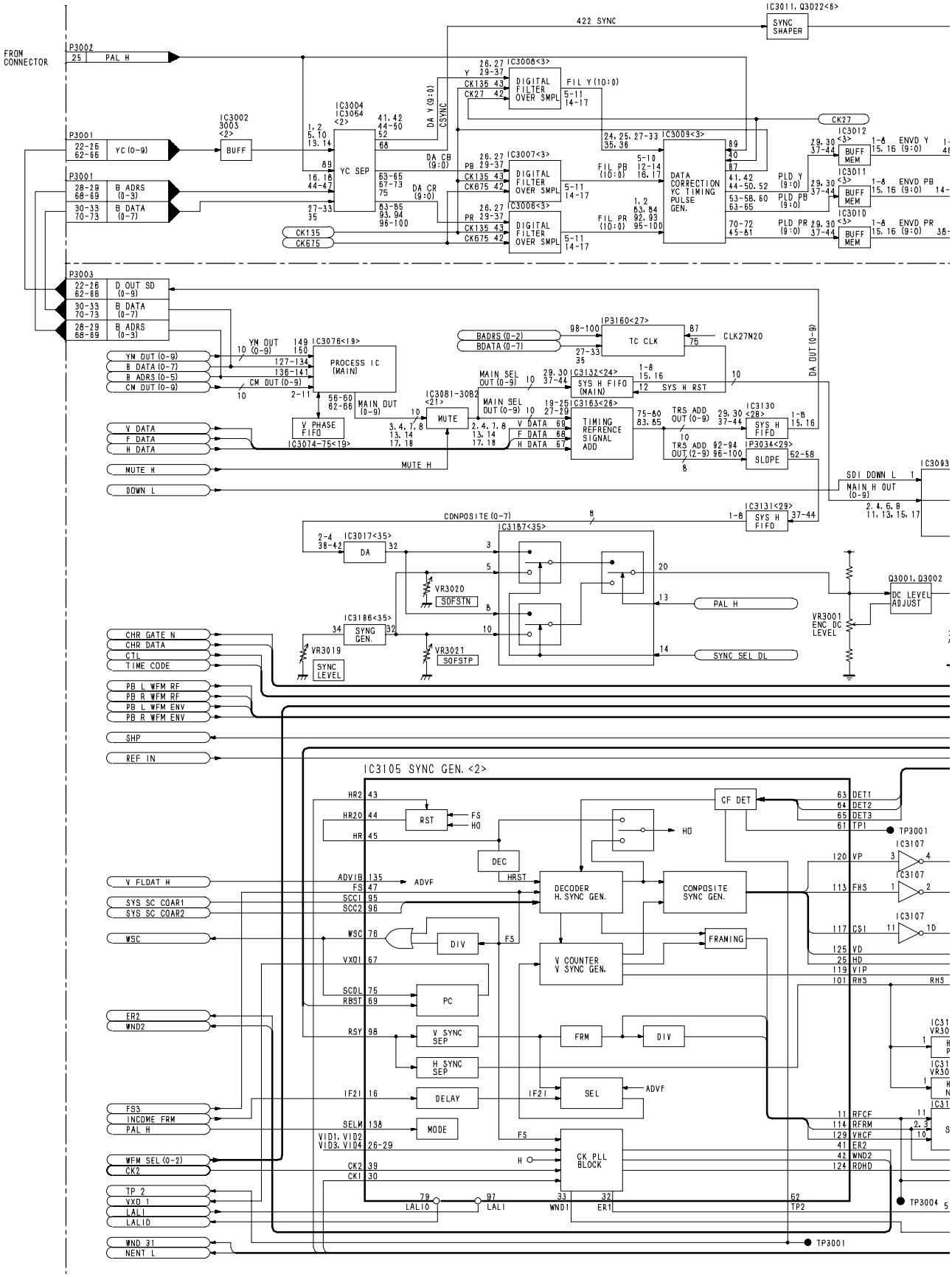

F5:V OUT BLOCK DIAGRAM

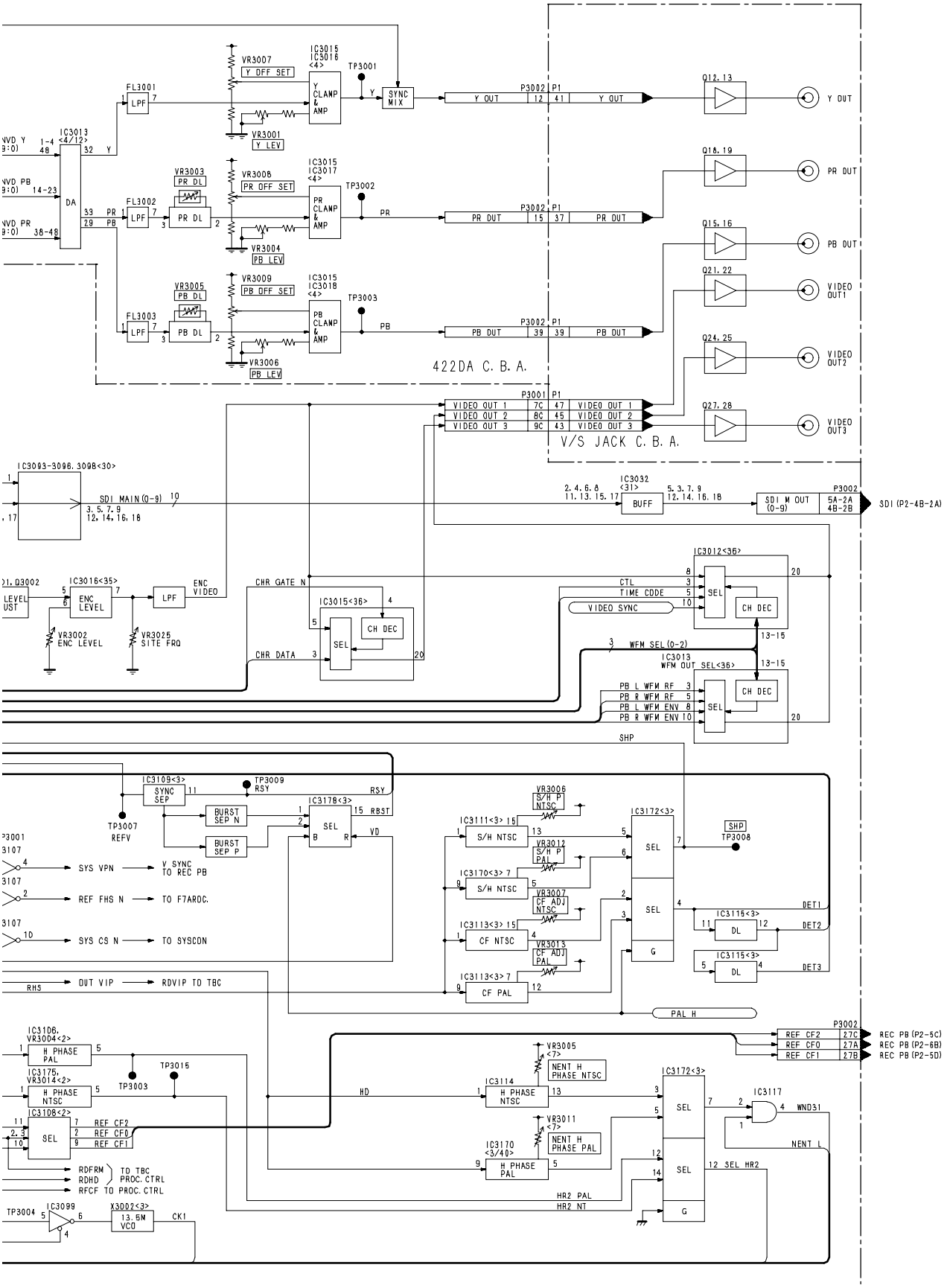

F6:A PROC BLOCK DIAGRAM

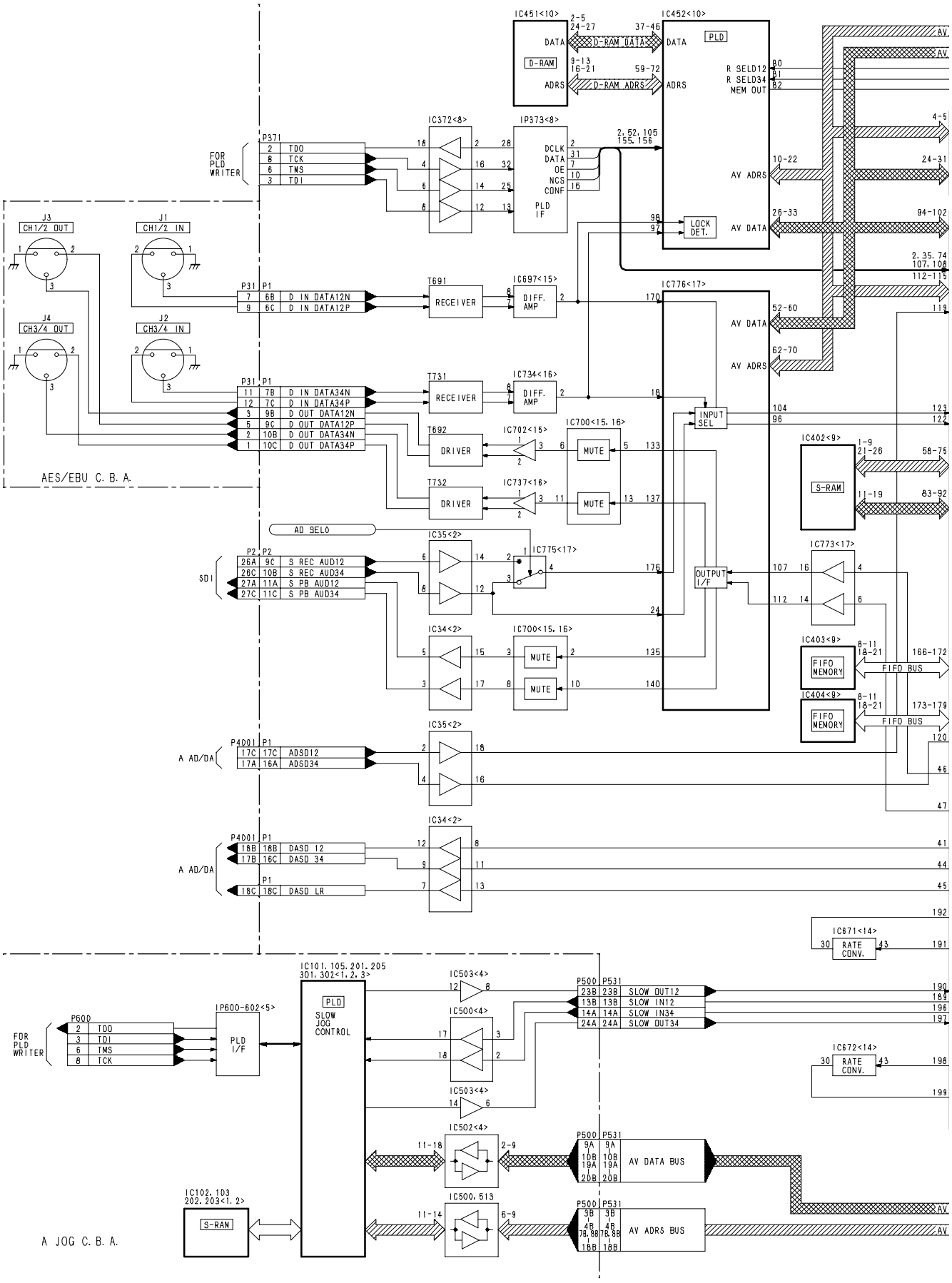

F6:A PROC BLOCK DIAGRAM

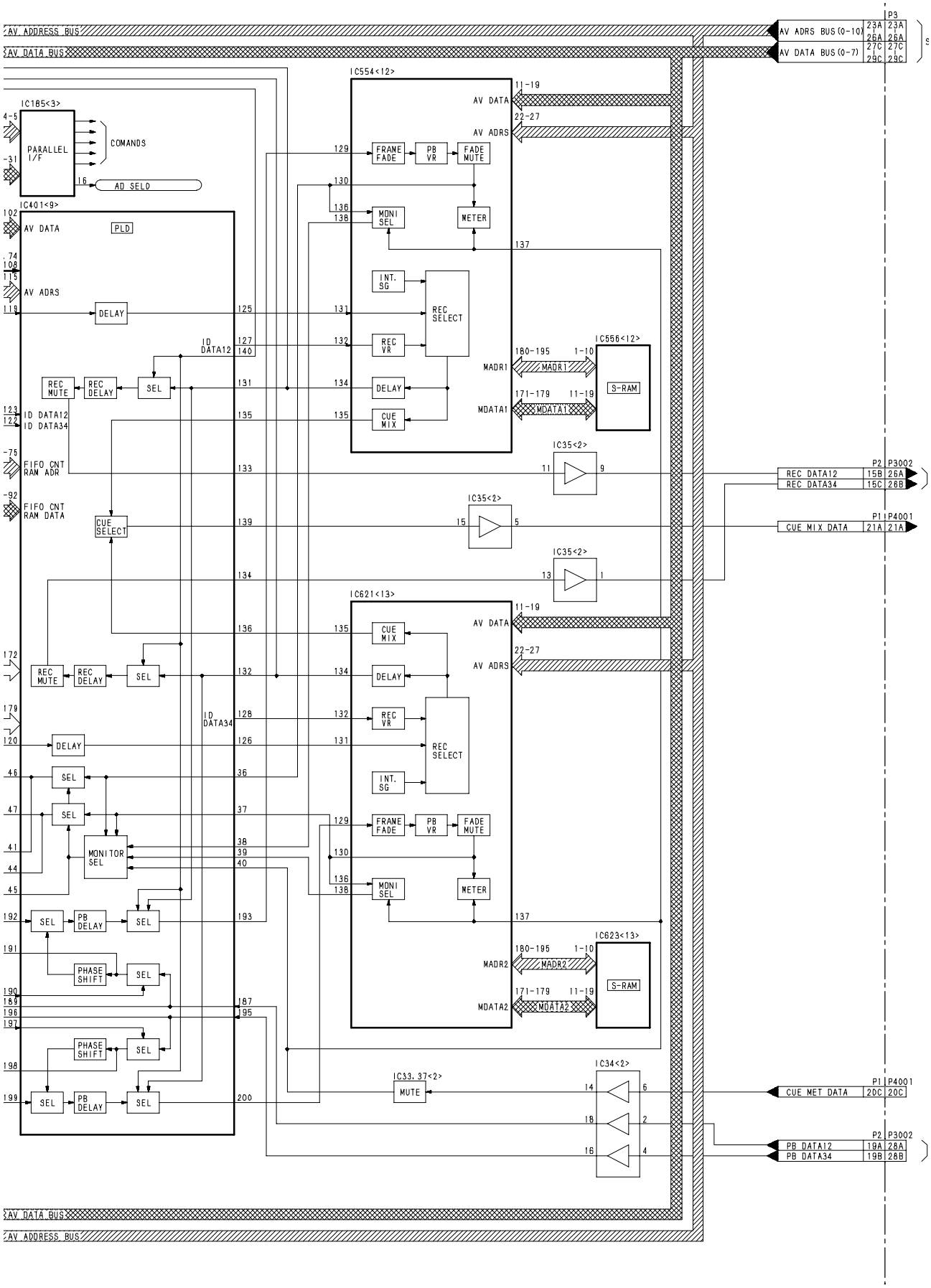

F7:VIDEO IN BLOCK DIAGRAM

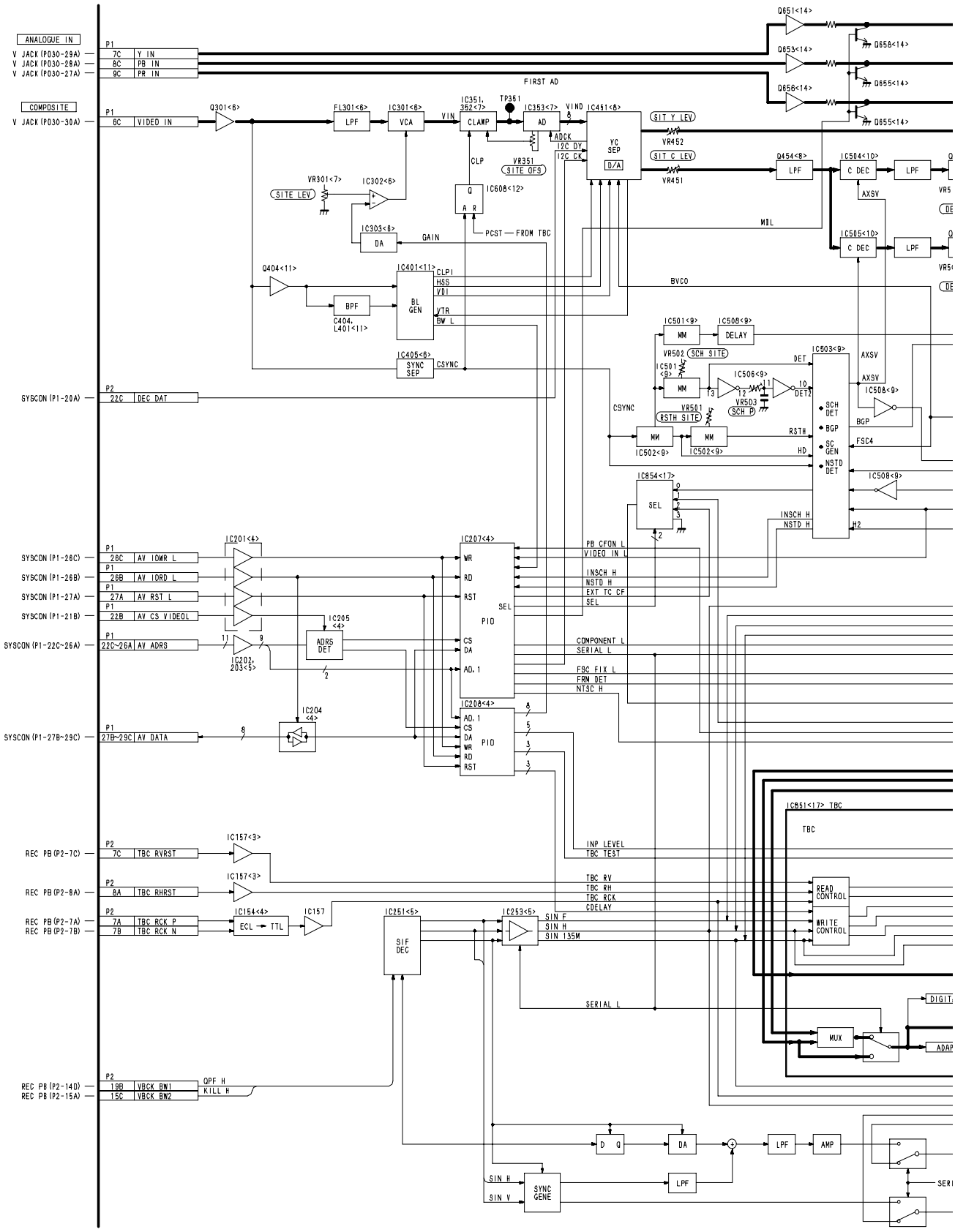

F7:VIDEO IN BLOCK DIAGRAM

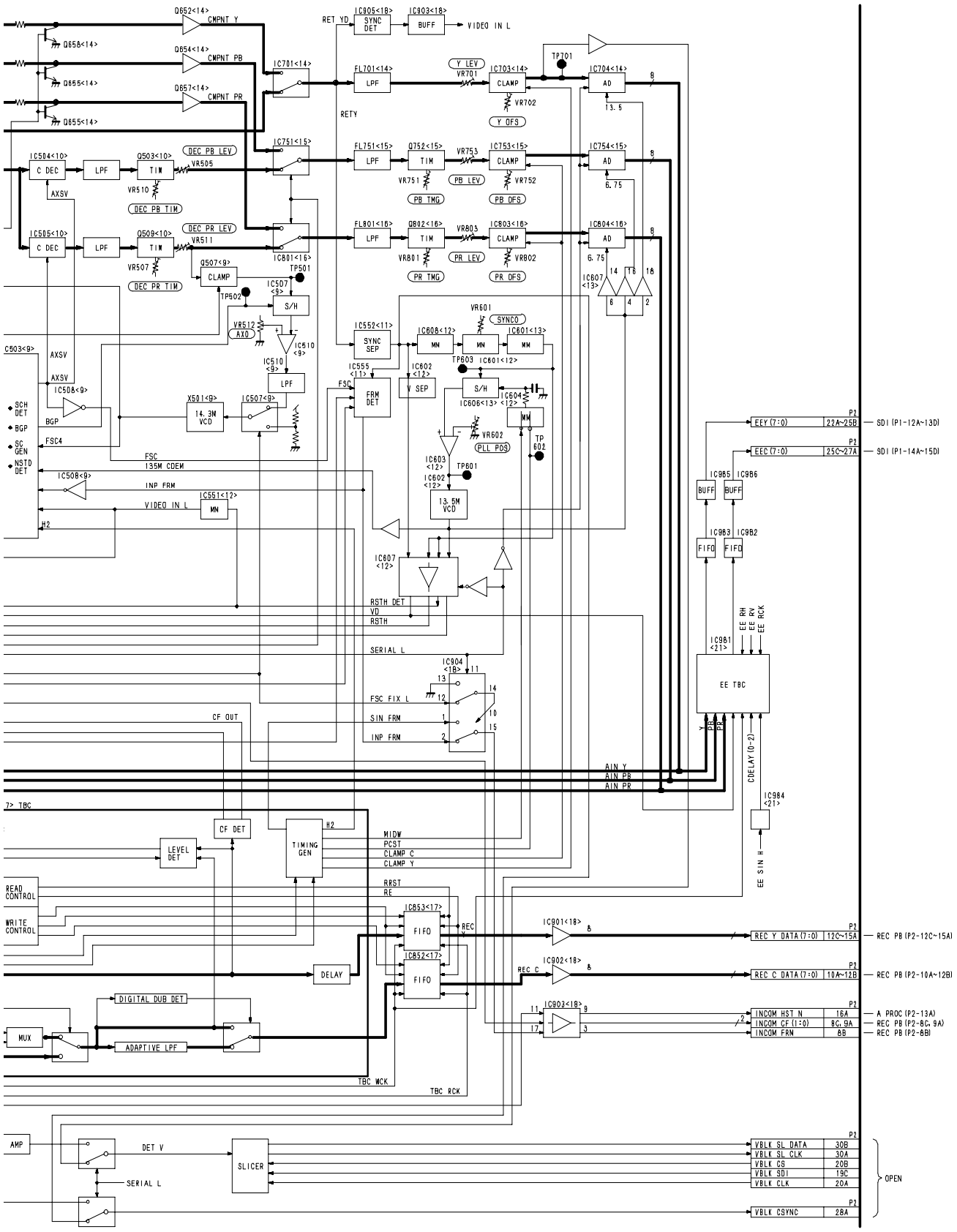

H3:EQ MAIN BLOCK DIAGRAM

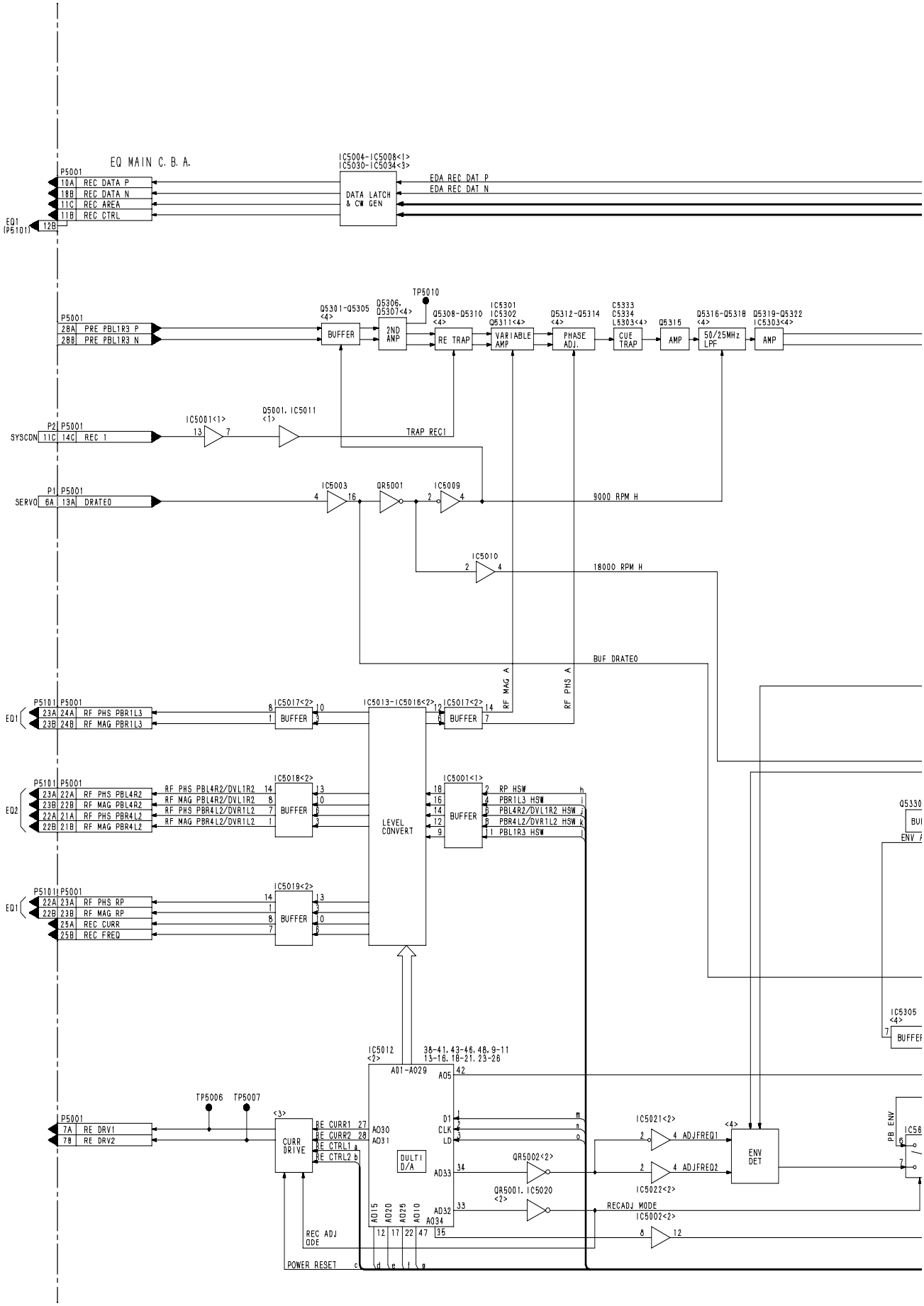

H3:EQ MAIN BLOCK DIAGRAM

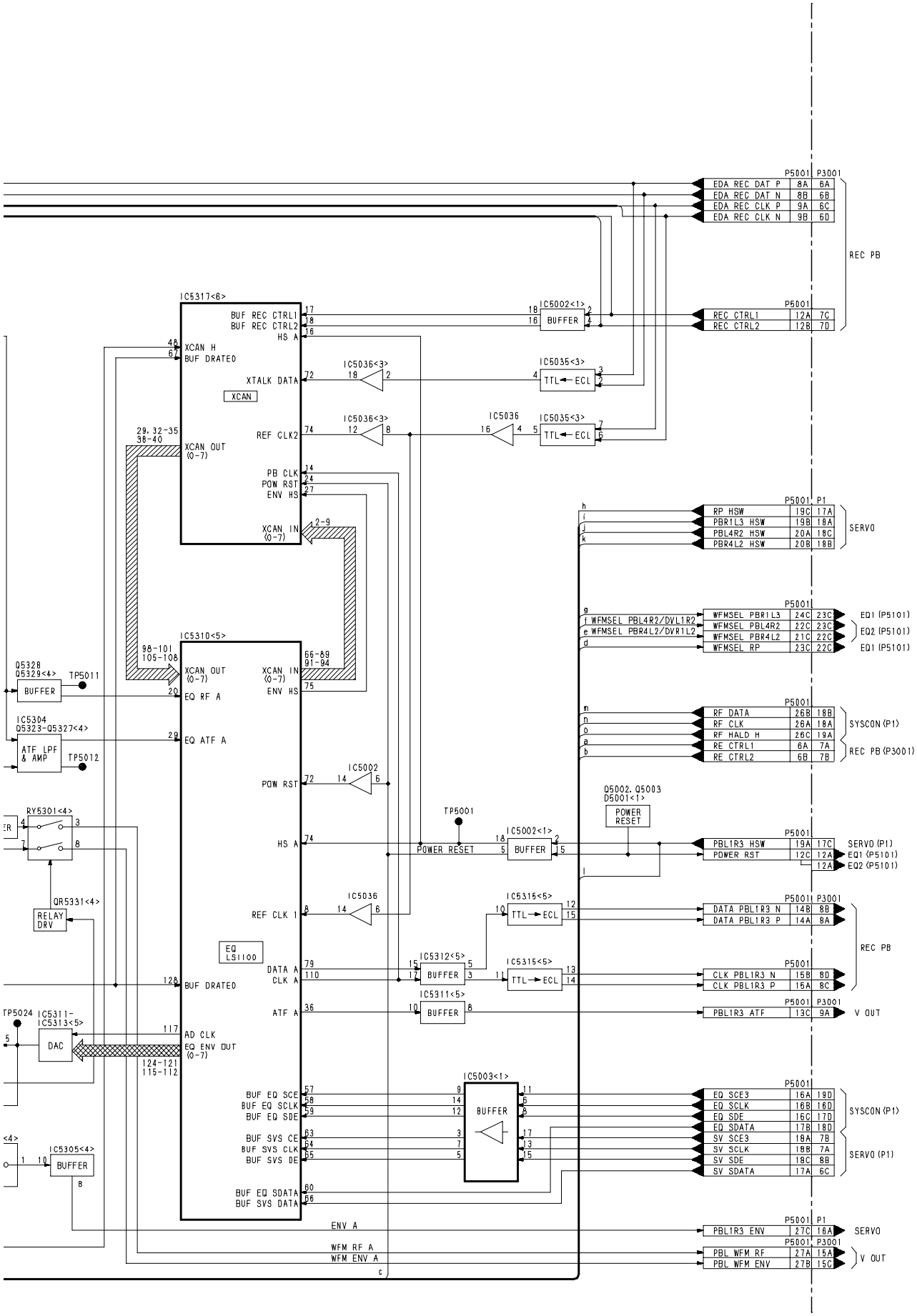

H1,H2:EQ1,EQ2 BLOCK DIAGRAM

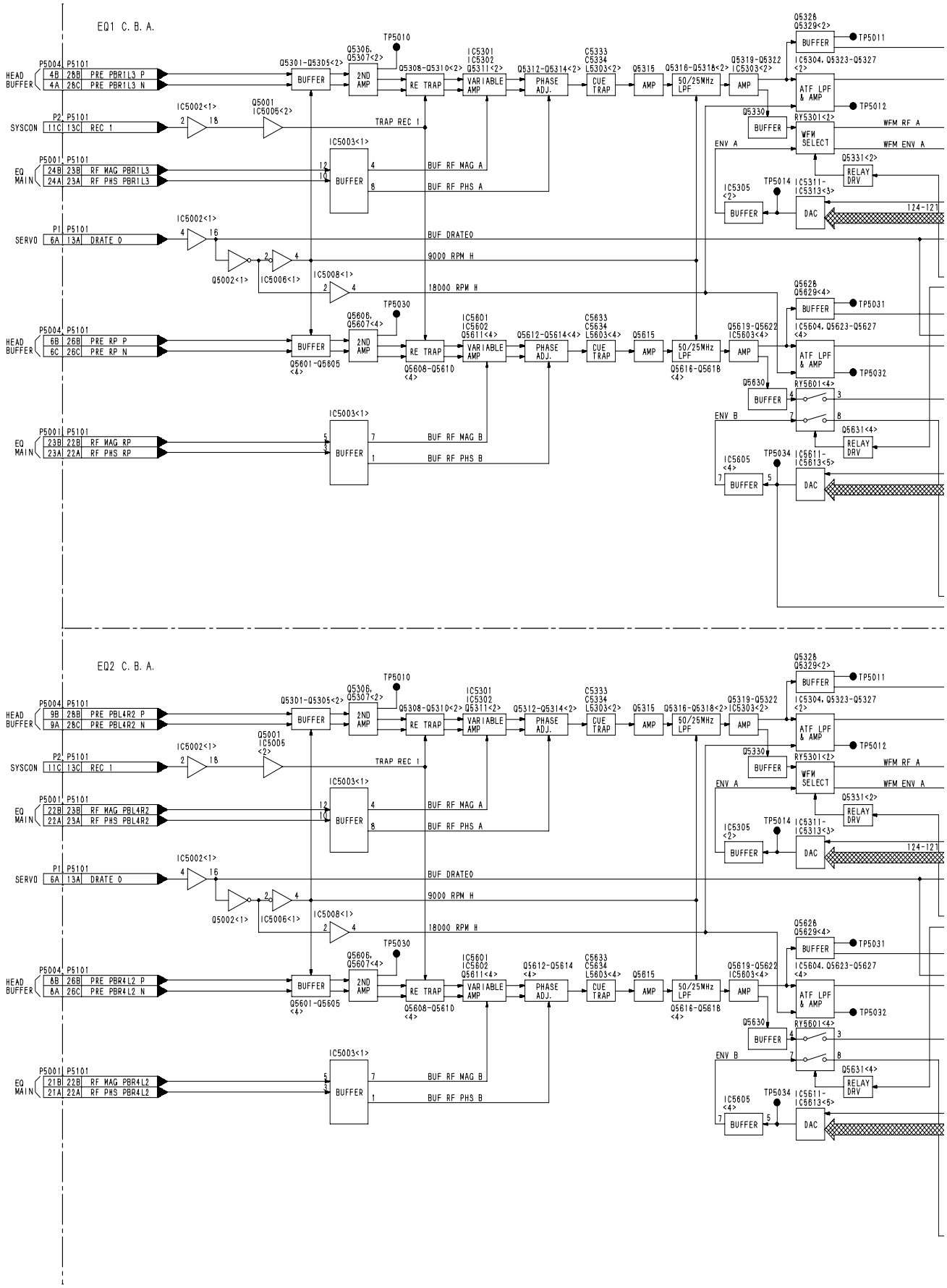

H1,H2:EQ1,EQ2 BLOCK DIAGRAM

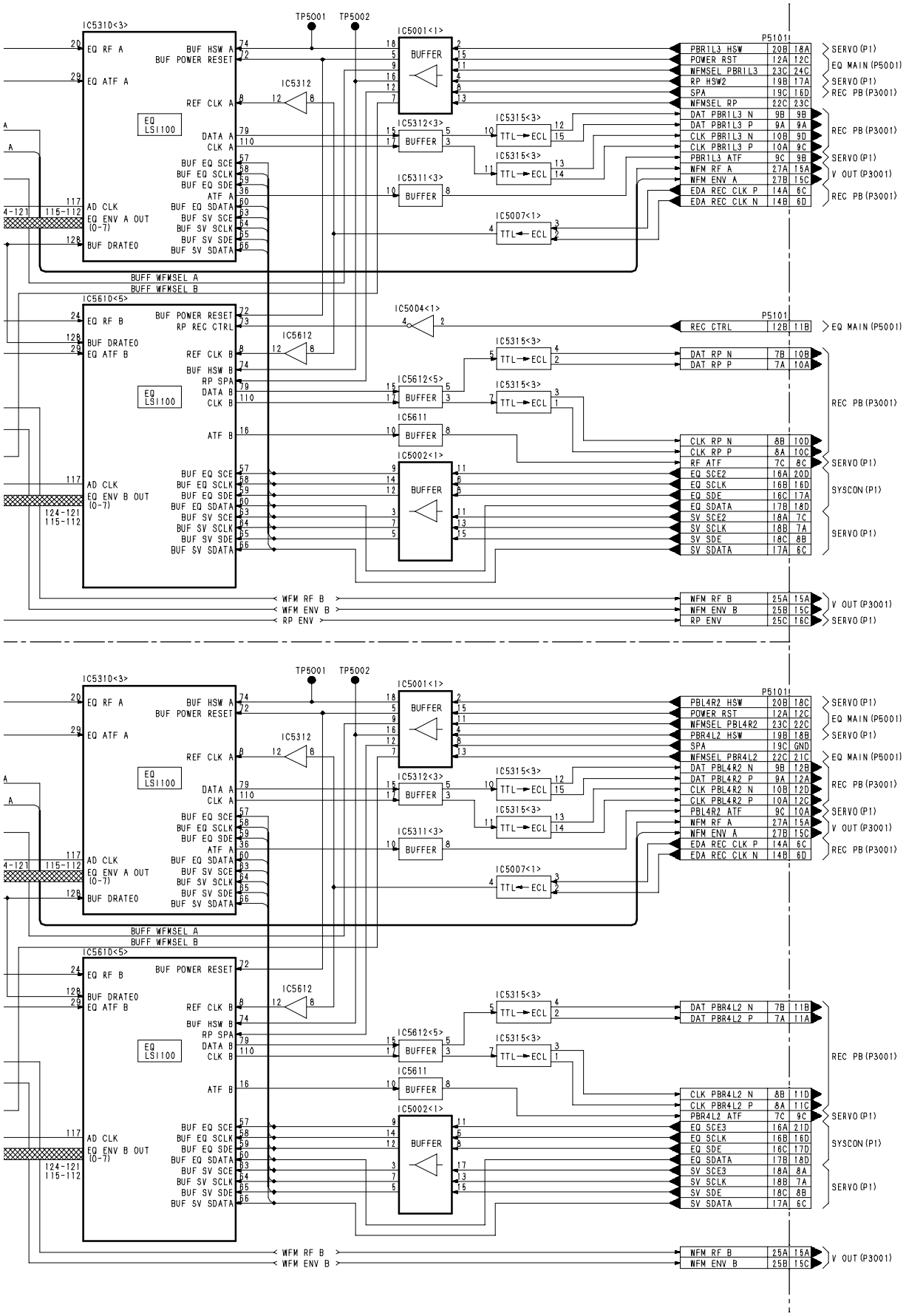

HEAD BUFFER 1 BLOCK DIAGRAM

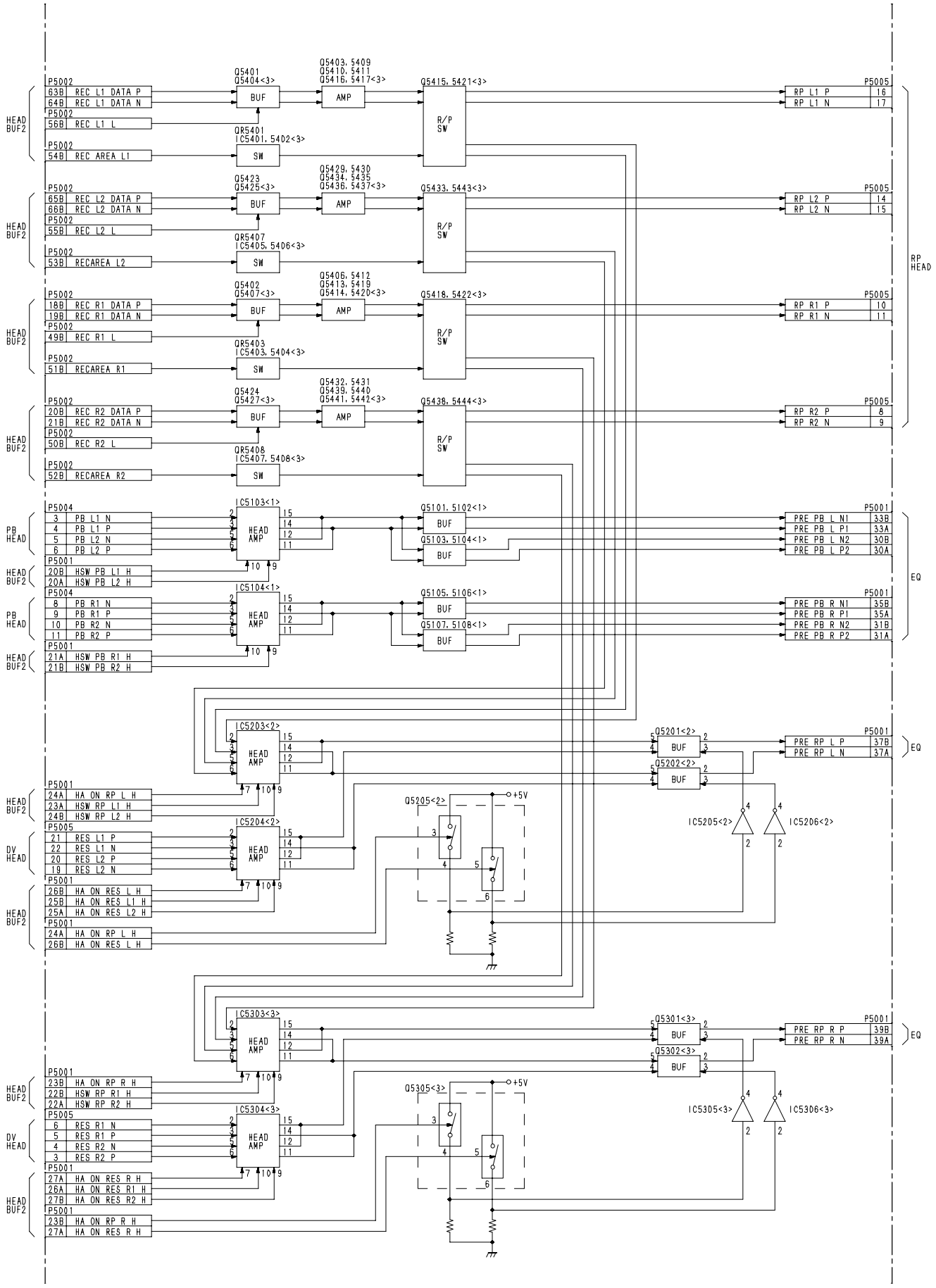

HEAD BUFFER 2 BLOCK DIAGRAM

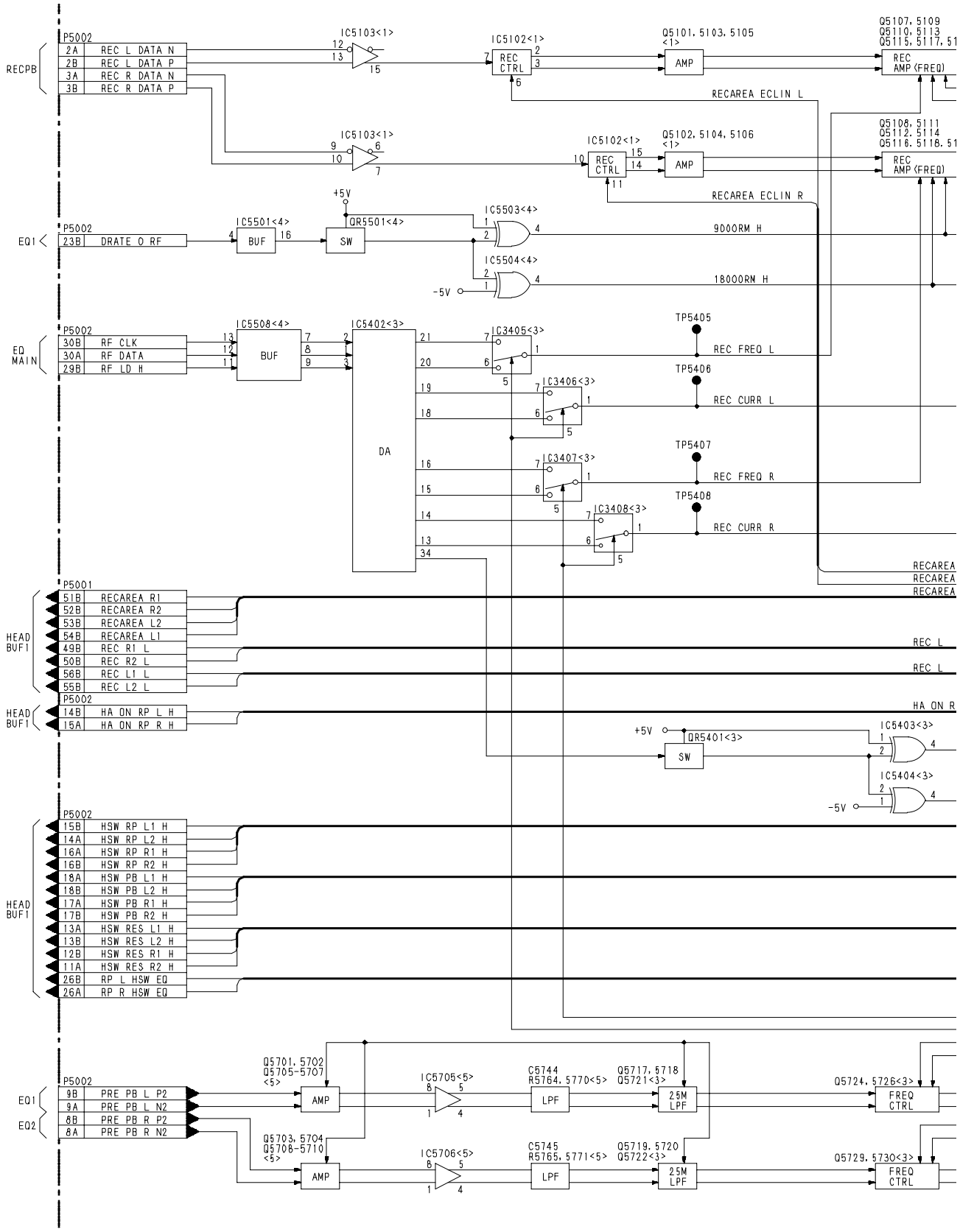

HEAD BUFFER 2 BLOCK DIAGRAM

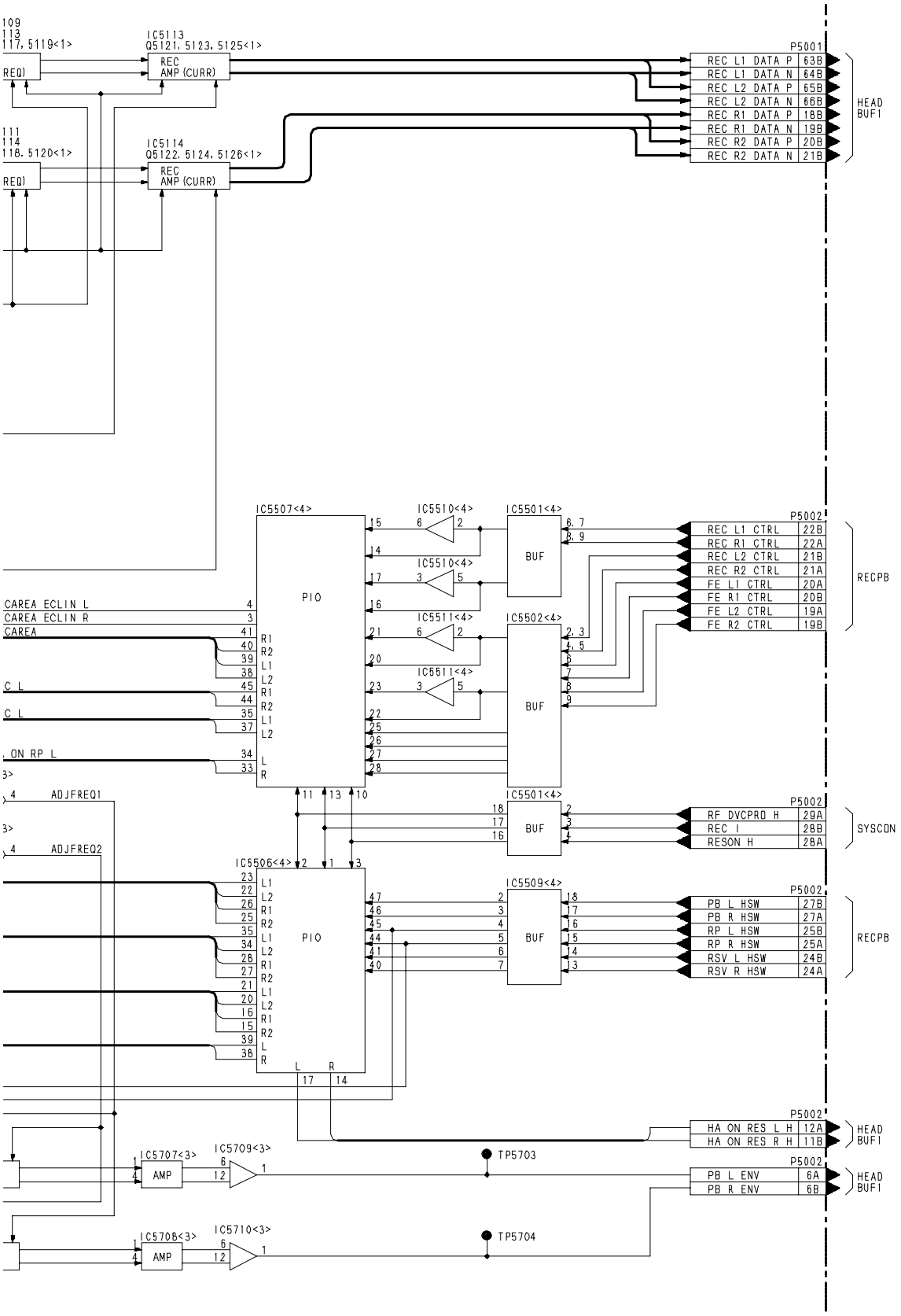

H5:A MAIN/H7:A AD BLOCK DIAGRAM

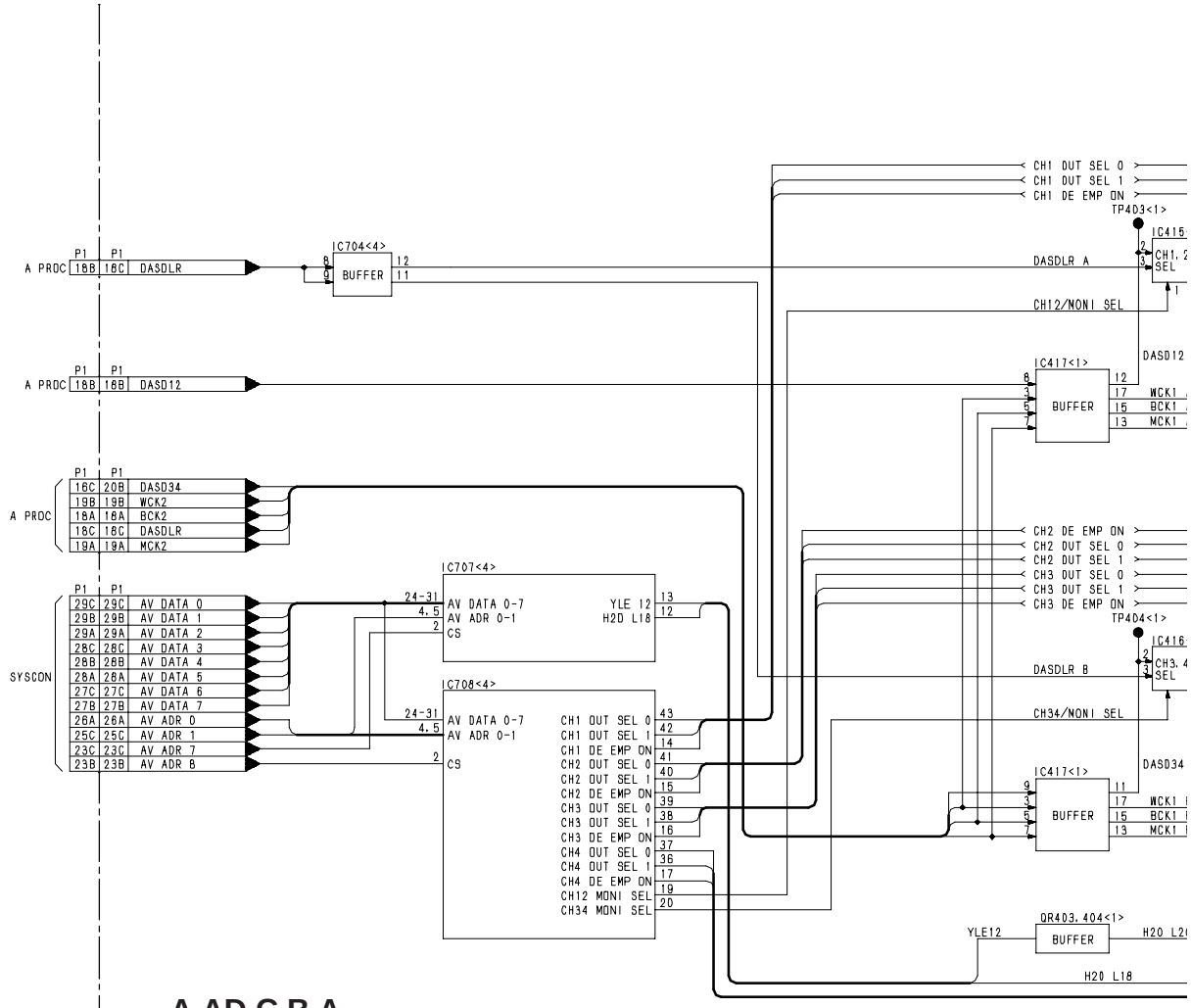

A AD C.B.A.

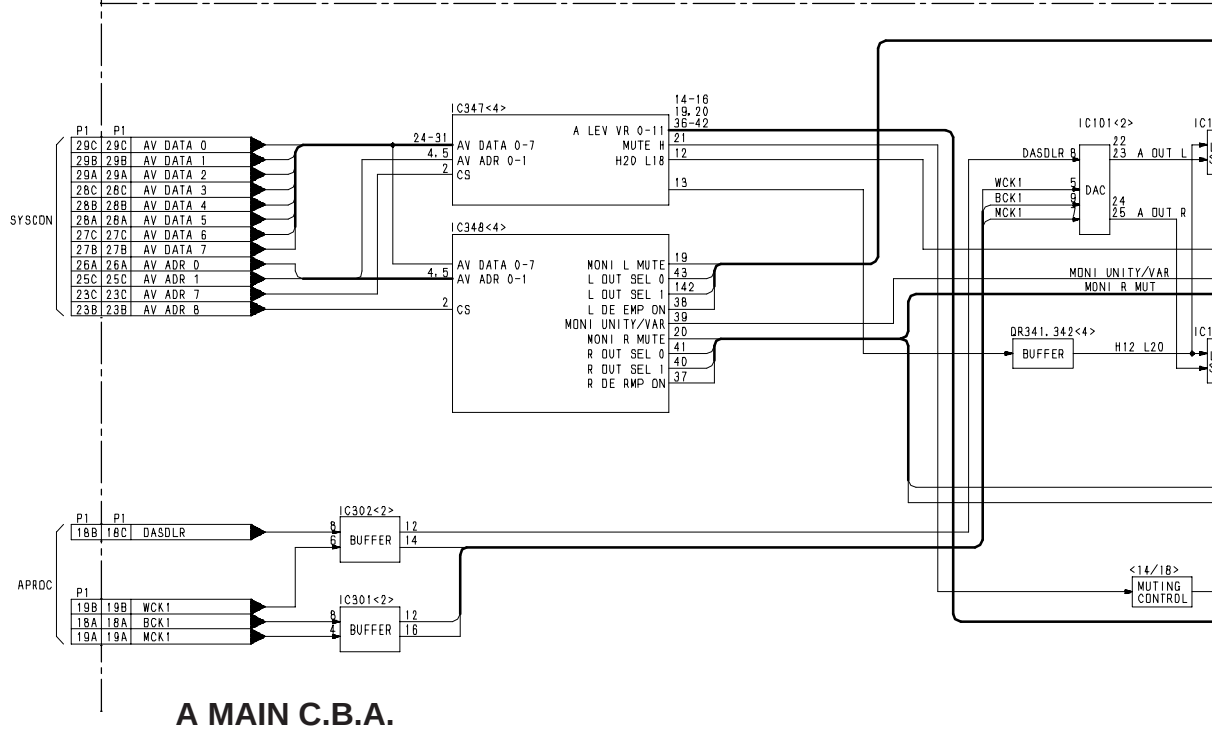

A MAIN C.B.A.

H5:A MAIN/H7:A AD BLOCK DIAGRAM

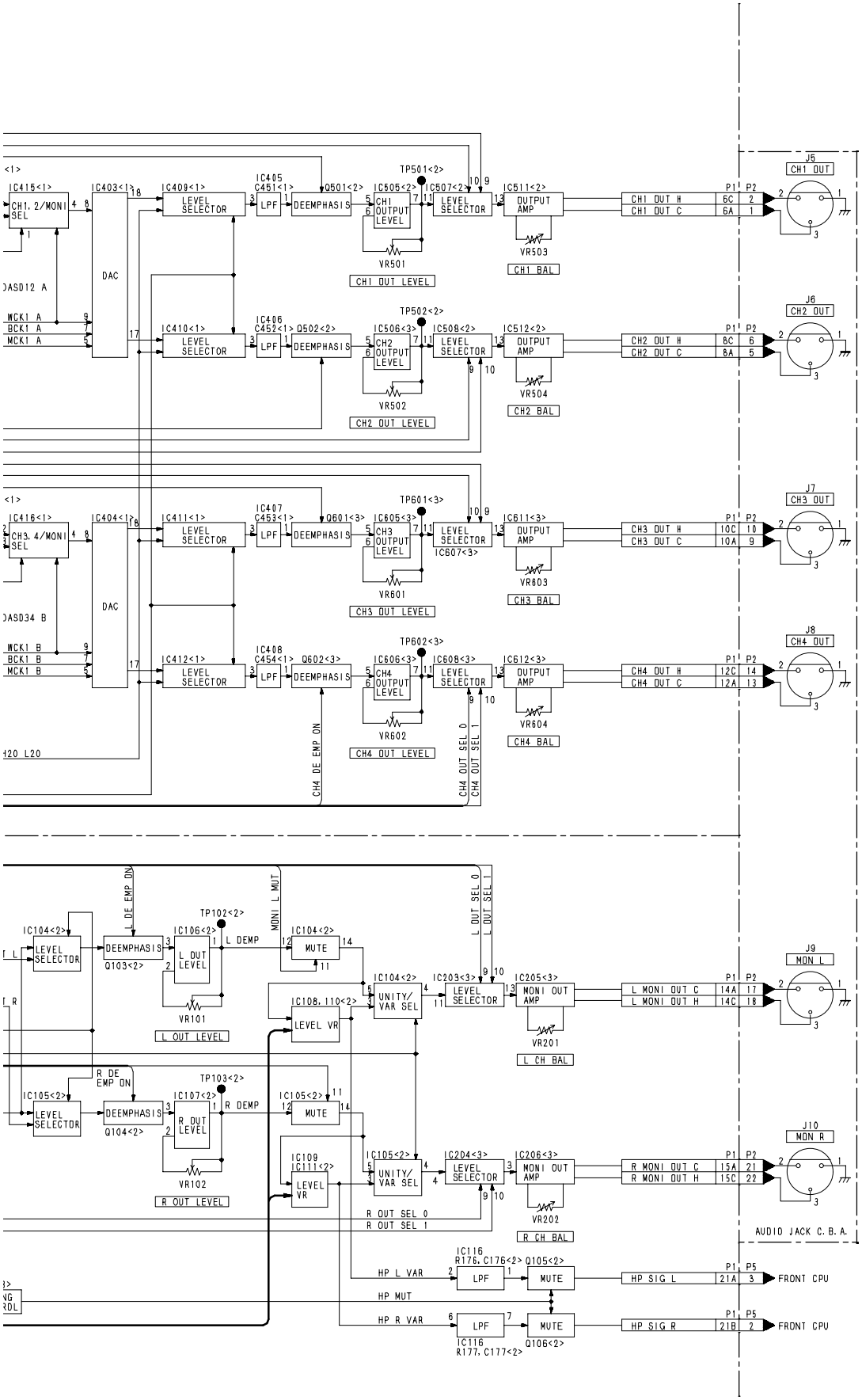

H6:A DA BLOCK DIAGRAM

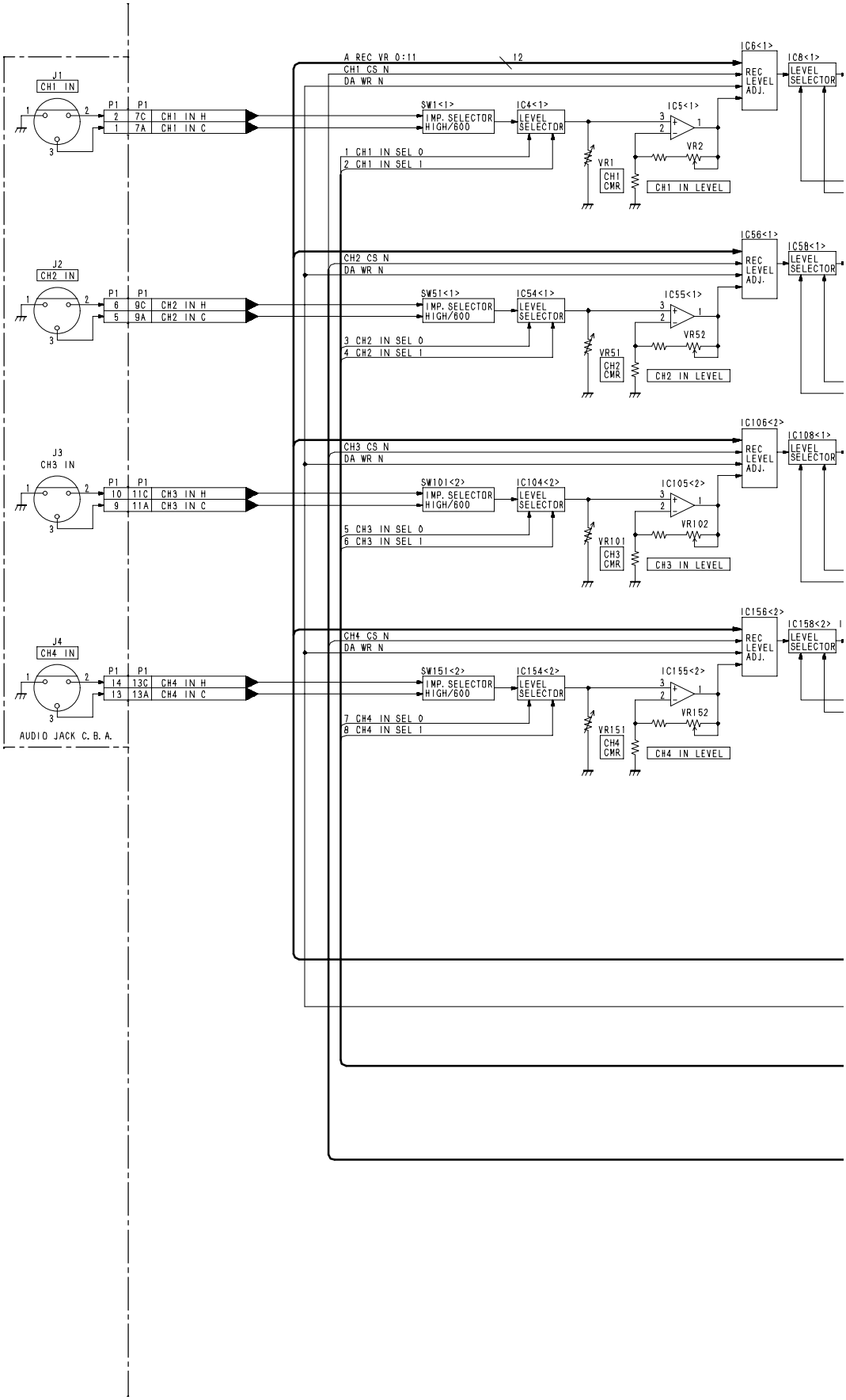

H6:A DA BLOCK DIAGRAM

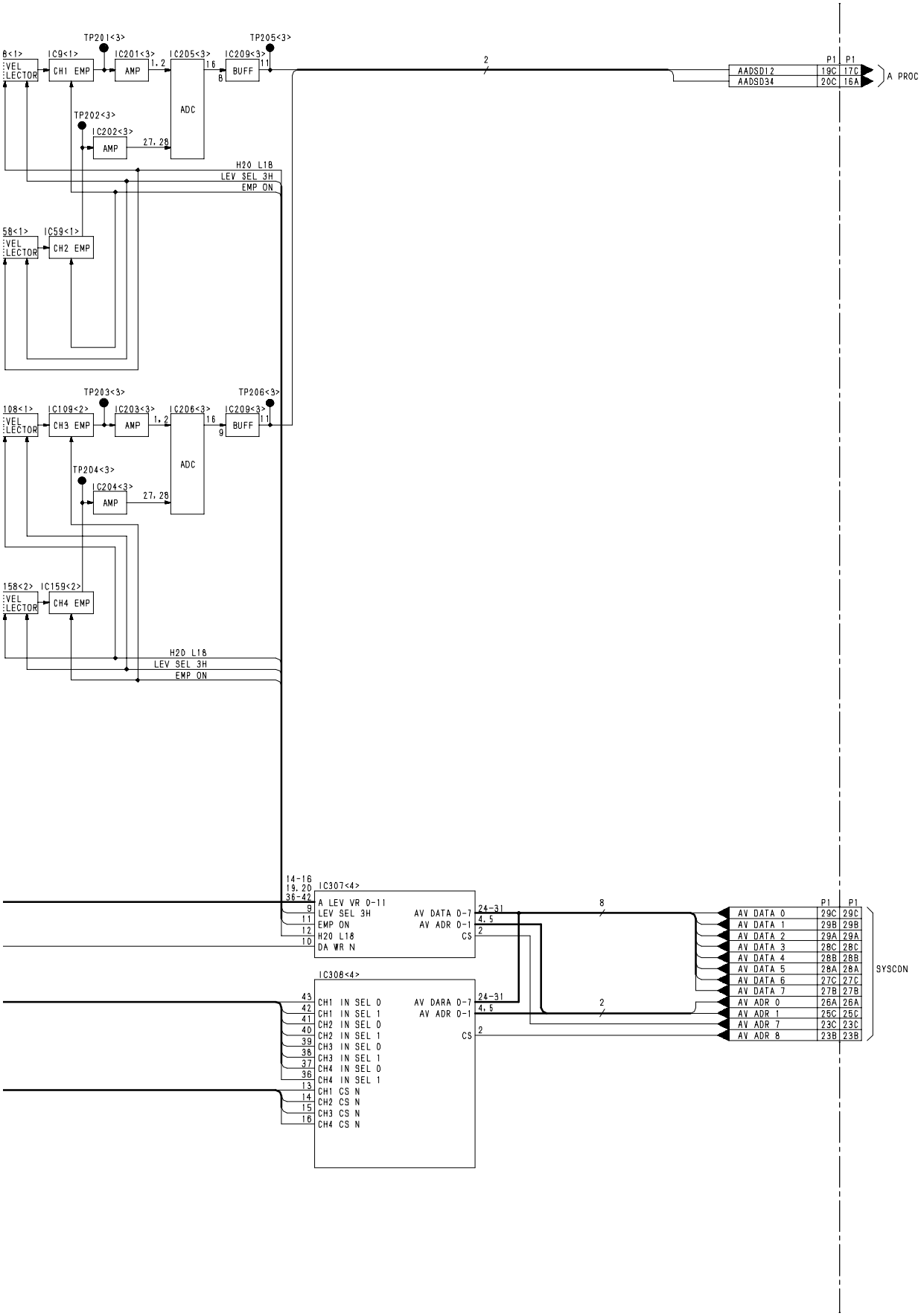

SECTION 6

SCHEMATIC DIAGRAMS

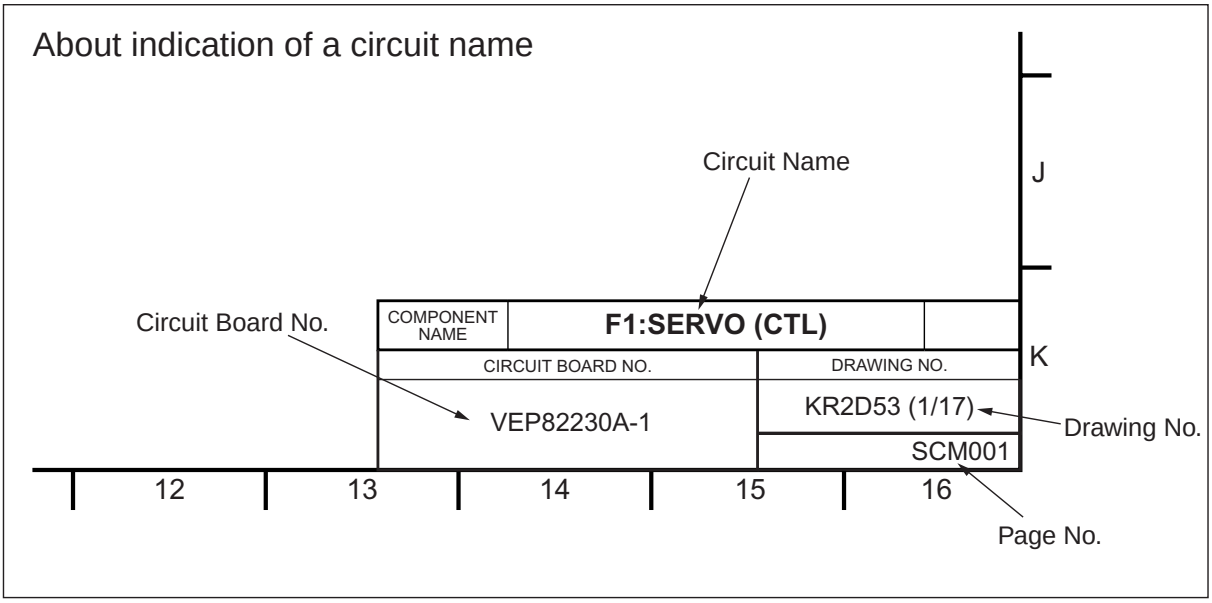

NOTE:
BE SURE TO MAKE YOUR ORDERS OF REPLACEMENT PARTS ACCORDING TO PARTS LIST, SECTION8

CAUTION

THE ☐ MARK INDICATES THE PRIMARY CIRCUIT TO DISTINGUISH THE PRIMARY FROM THE SECONDARY CIRCUIT.
PAY ATTENTION NOT TO RECEIVE AN ELECTRIC SHOCK DURING REPAIR AND SERVICE OF THE PRODUCTS.

IMPORTANT SAFETY NOTICE:
COMPONENTS IDENTIFIED WITH THE MARK ⚠ HAVE THE SPECIAL CHARACTERISTICS FOR SAFETY.
WHEN REPLACING ANY OF THESE COMPONENTS, USE ONLY THE SAME TYPE.

CONTENTS

F1:SERVO

CTL (1/17) SCM1
CAP_FG (2/17) SCM2
SRL_FG (3/17) SCM3
TRL_FG (4/17) SCM4
CYL_FG_PG (5/17) SCM5
CPU (6/17) SCM6
RF_IN (7/17) SCM7
PLD (8/17) SCM8
CPU_IF (9/17) SCM9
POWER (10/17) SCM10
SRL_DRV (11/17) SCM11
TRL_DRV (12/17) SCM12
SW_REG (13/17) SCM13
CA_CY_DRV (14/17) SCM14
OTHER (15/16) SCM15
SERVO_SUB1 (16/17) SCM16
SOFT (17/17) SCM17

F2:SYSCON

MAIN (1/18) SCM18
MAIN (2/18) SCM19
MAIN (3/18) SCM20
MAIN (4/18) SCM21
MAIN (5/18) SCM22
IF (6/18) SCM23
IF (7/18) SCM24
IF (8/18) SCM25
IF (9/18) SCM26
AV_IF (10/18) SCM27
AV_IF (11/18) SCM28
AV_IF (12/18) SCM29
AV_IF (13/18) SCM30
AV_IF (14/18) SCM31
AV_IF (15/18) SCM32
AV_IF (16/18) SCM33
MAIN (17/18) SCM34
VSI**** (18/18) SCM35

F4:REC PB

MOTHER (1/17) SCM36
POWER (2/17) SCM37
AVIF_FRMGEN (FPGA3) (3/17) SCM38
ECC100 (PLD1) (4/17) SCM39
SV_IF (FPGA5) (5/17) SCM40
2ND_BUS_SEL (FPGA7) (6/17) SCM41
uCOM_I/F (7/17) SCM42
DV_Ucom (8/17) SCM43
STDI_TX (FPGA1) (9/17) SCM44
STDI_RX (FPGA2) (10/17) SCM45
S2P (11/17) SCM46
COMP100 (12/17) SCM47
PREP50 (13/17) SCM48
VIDEO_DATA (14/17) SCM49
V_BLK (15/17) SCM50
VIO_CTRL (16/17) SCM51
CONFIG (17/17) SCM52

F5:V OUT

CONNECTOR (1/40) SCM53
SYNC_GEN (2/40) SCM54
REF_PLL (3/40) SCM55
SC_PLL (4/40) SCM56
HLOCK_PLL (5/40) SCM57
REG1 (6/40) SCM58
D_IN (7/40) SCM59
PWR_RST (8/40) SCM60
COMB (9/40) SCM61
TBC_LSI (10/40) SCM62
TBC_FIFO (11/40) SCM63
CLK_BUFF1 (12/40) SCM64
TBC_CTL (13/40) SCM65
PROC_CTL (14/40) SCM66
INTERPOLATION (15/40) SCM67
INT_FIFO (16/40) SCM68
INT_CTL (17/40) SCM69
INT_SEL (18/40) SCM70
PROC_MAIN (19/40) SCM71
PROC_SUB (20/40) SCM72
MAIN_SEL (21/40) SCM73
SUB_SEL (22/40) SCM74
DOWN_CON (23/40) SCM75
SYS_H_MAIN (24/40) SCM76
SYS_H_SUB (25/40) SCM77
TRS_ADD (26/40) SCM78
TCCLK (27/40) SCM79
SYS_H_DA (28/40) SCM80
SYS_H_ENC (29/40) SCM81
SDI_SEL (30/40) SCM82
D_OUT (31/40) SCM83
CLK_BUFF2 (32/40) SCM84
SYS_IF (33/40) SCM85
TERMINATOR (34/40) SCM86
ENC (35/40) SCM87
WFM_BUFF (36/40) SCM88
REG2 (37/40) SCM89
CFDET (38/40) SCM90
V_OUT_SUB (39/40) SCM91
INCOME_ENC (40/40) SCM92

F5 SUB:422 DA SUB

844DA3 (1/12) SCM93
422_DEC3 (2/12) SCM94
D_FIL3 (3/12) SCM95
DA_CONV3 (4/12) SCM96
MATRIX3 (5/12) SCM97
CMPNENT_BUFF3 (6/12) SCM98
REG3_3 (7/12) SCM99
INPUT_BUFF3 (8/12) SCM100
TIMING_CTL3 (9/12) SCM101
IP_CONV3 (10/12) SCM102
ENV3 (11/12) SCM103
COMPARISON CHART (12/12) SCM104

F6:A PROC

CON (1/19) SCM105
IOB (2/19) SCM106
SYSIO (3/19) SCM107
CLKBUF (4/19) SCM108
PLL (5/19) SCM109
PLL2 (6/19) SCM110
AIDLY (7/19) SCM111
ISP (8/19) SCM112
FIFOCNT (9/19) SCM113
AMEM (10/19) SCM114
SLOW (11/19) SCM115
CNT1 (12/19) SCM116
CNT2 (13/19) SCM117
SRC (14/19) SCM118
DIF2 (15/19) SCM119
DIF3 (16/19) SCM120
DIF-IC (17/19) SCM121
DIFCON (18/19) SCM122
SLOW_MCK (19/19) SCM123

F6 SUB:A JOG

AJOG (1/2) SCM124
AJOG (2/2) SCM125

F7:V_IN

CONNECTOR (1/21) SCM126
POWER (2/21) SCM127
INBUFF (3/21) SCM128
SYS_IF (4/21) SCM129
SIF_DEC (5/21) SCM130

GAIN_CNTRL (6/21) SCM131
1ST_AD (7/21) SCM132
DECORDER (8/21) SCM133
4fsc_PLL (9/21) SCM134
C_DEM (10/21) SCM135
SYNC_SEP (11/21) SCM136
135M_PLL (12/21) SCM137
M2_BCAM_SELECT (13/21) SCM138
2nd_AD_Y (14/21) SCM139
2nd_AD_PB (15/21) SCM140
2nd_AD_PR (16/21) SCM141
TBC (17/21) SCM142
OUTBUFF (18/21) SCM143
SLICER (19/21) SCM144
DIG_DEG (20/21) SCM145
EE_TBC (21/21) SCM146

H1, H2:EQ

EQ (1/6) SCM147
EQ (2/6) SCM148
EQ (3/6) SCM149
EQ (4/6) SCM150
EQ (5/6) SCM151
EQ (6/6) SCM152

H3:EQ MAIN

EQMAIN (1/7) SCM153
EQMAIN (2/7) SCM154
EQMAIN (3/7) SCM155
EQMAIN (4/7) SCM156
EQMAIN (5/7) SCM157
EQMAIN (6/7) SCM158
EQMAIN (7/7) SCM159

H5:A_MONI_MIC

ADIN/ERASE (1/5) SCM160
AD/DA (2/5) SCM161
MON_OUT (3/5) SCM162
PIO (4/5) SCM163
OTHER (5/5) SCM164

H6:A_DA

DAC (1/5) SCM165
CH1/2 OUT (2/5) SCM166
CH3/4 OUT (3/5) SCM167
PIO (4/5) SCM168
CONNECTOR (5/5) SCM169

H7:A_AD

CH1/2 IN (1/5) SCM170
CH3/4 IN (2/5) SCM171
ADC (3/5) SCM172
PIO (4/5) SCM173
CONNECT (5/5) SCM174

HEAD_BUFF1

HEAD_BUFFER_1 (1/7) SCM175
HEAD_BUFFER_1 (2/7) SCM176
HEAD_BUFFER_1 (3/7) SCM177
HEAD_BUFFER_1 (4/7) SCM178
HEAD_BUFFER_1 (5/7) SCM179
HEAD_BUFFER_1 (6/7) SCM180
HEAD_BUFFER_1 (7/7) SCM181

HEAD_BUFF2

HEAD_BUFFER_2 (1/7) SCM182
HEAD_BUFFER_2 (2/7) SCM183
HEAD_BUFFER_2 (3/7) SCM184
HEAD_BUFFER_2 (4/7) SCM185
HEAD_BUFFER_2 (5/7) SCM186
HEAD_BUFFER_2 (6/7) SCM187
HEAD_BUFFER_2 (7/7) SCM188

RF_MOTHER

RF_MOTHER (1/1) SCM189

VTR_MOTHER

F1 (1/13) SCM190
F2 (2/13) SCM191
F3 (3/13) SCM192
F4 (4/13) SCM193
F5 (5/13) SCM194
F6 (6/13) SCM195
F7 (7/13) SCM196
H1,H2 (8/13) SCM197
H3,H4 (9/13) SCM198
H5,H6 (10/13) SCM199
H7 (11/13) SCM200
CONNECT 1 (12/13) SCM201
CONNECT 2 (13/13) SCM202

VIDEO_REAR

CONNECTOR (1/3) SCM203
IN_BUF (2/3) SCM204
OUT_BUF (3/3) SCM205

AUDIO_REAR

A_JACK (1/1) SCM206

HP/MIC_JACK

HP/MIC_JACK (1/1) SCM207

POWER1

POWER1 (1/1) SCM208

POWER2

POWER2 (1/1) SCM209

AC_HEAD_IF

AC_HEAD_IF (1/1) SCM210

MECHA_IF

MECHA_IF (1/4) SCM211
MECHA_IF (2/4) SCM212
MECHA_IF (3/4) SCM213
MECHA_IF (4/4) SCM214

EJECT

EJECT (1/1) SCM215

FRONT_LED

FRONT_RED (1/1) SCM216

MAIN_POWER_LED

MAIN_POWER_LED (1/1) SCM217

RESET_SW

RESET_SW (1/1) SCM218

PC_POWER_SW

PC_POWER_SW (1/1) SCM219

FAN_I/F

FAN_I/F (1/1) SCM220

SCSI_MOTHER

SCSI_MOTHER (1/3) SCM221
SCSI_MOTHER (2/3) SCM222
SCSI_MOTHER (3/3) SCM223

PC_FAN_I/F

PC_FAN_I/F (1/1) SCM224

INTERCONNECTION

VTR_MOTHER (1/7) SCM225
VTR_RF (2/7) SCM226
VTR_MECHA (3/7) SCM227
VTR_RF_PANEL (4/7) SCM228
SCSI_MOTHER (5/7) SCM229
CPU_MOTHER (6/7) SCM230
PC_POWER/REAR (7/7) SCM231

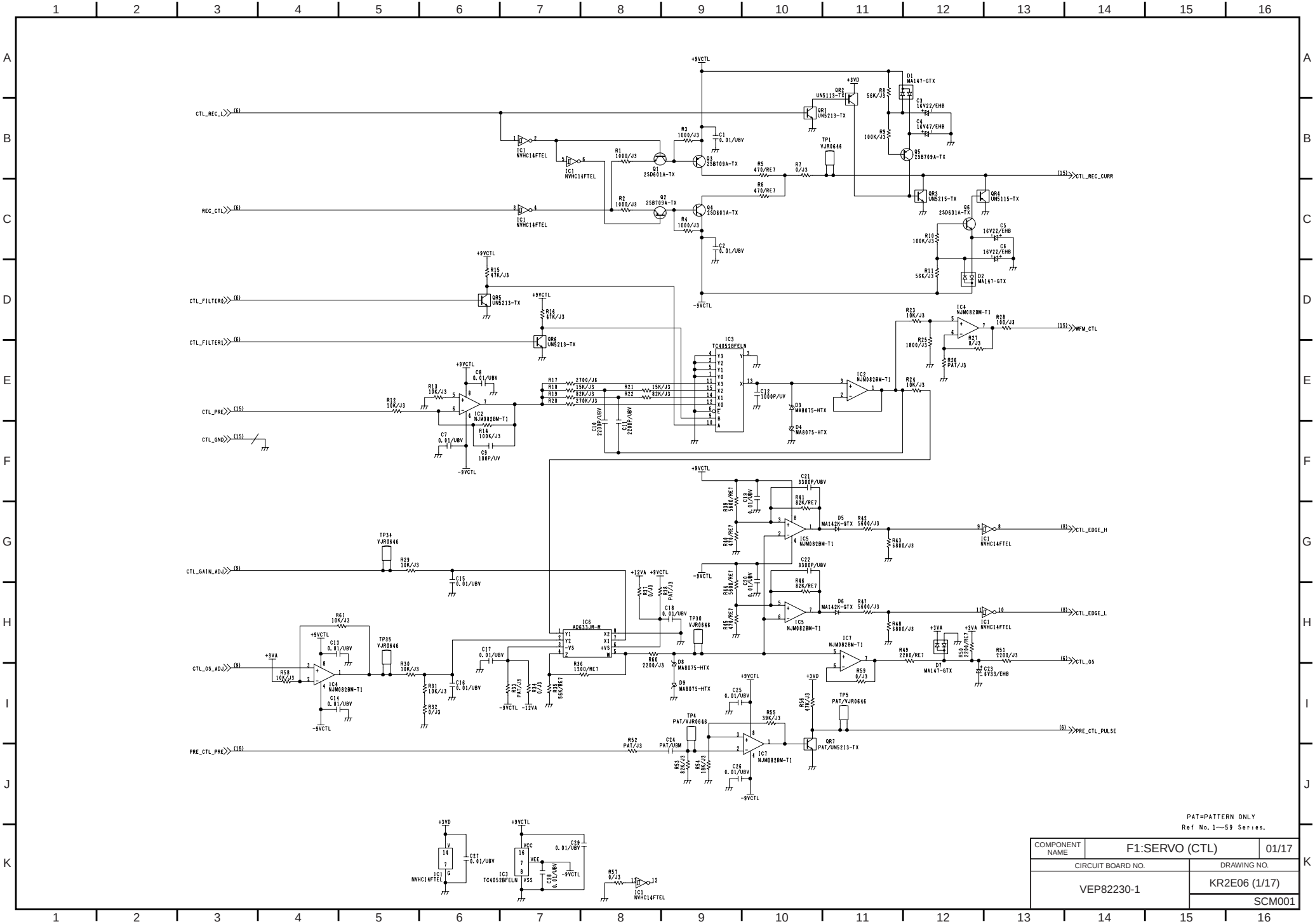

COMPONENT NAME	F1:SERVO (CTL)	01/17
CIRCUIT BOARD NO.	DRAWING NO.	
VEP82230-1	KR2E06 (1/17)	
	SCM001	

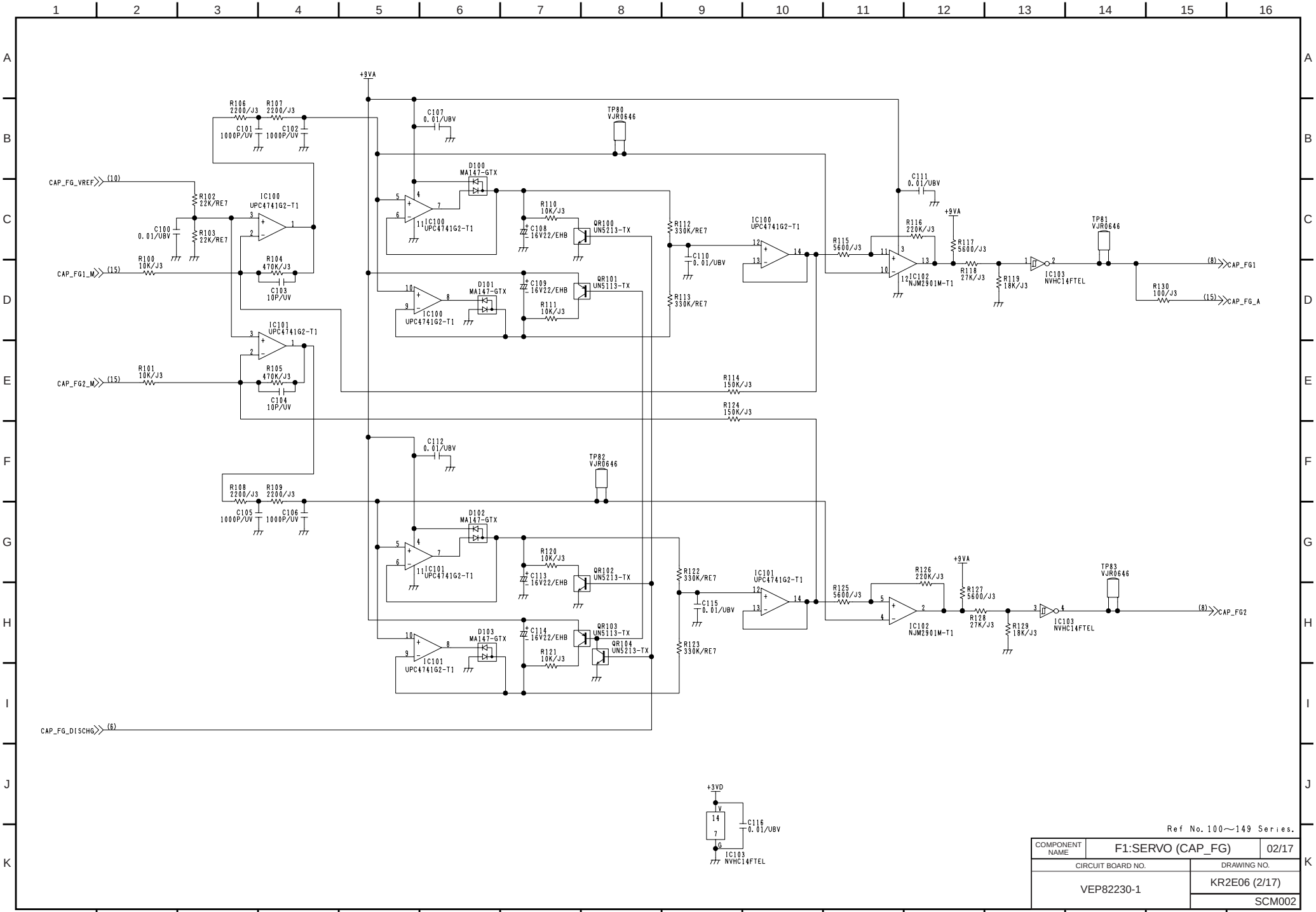

Ref No. 100～149 Series.

COMPONENT NAME	F1:SERVO (CAP_FG)	02/17
CIRCUIT BOARD NO.	DRAWING NO.	
VEP82230-1	KR2E06 (2/17)	
	SCM002	

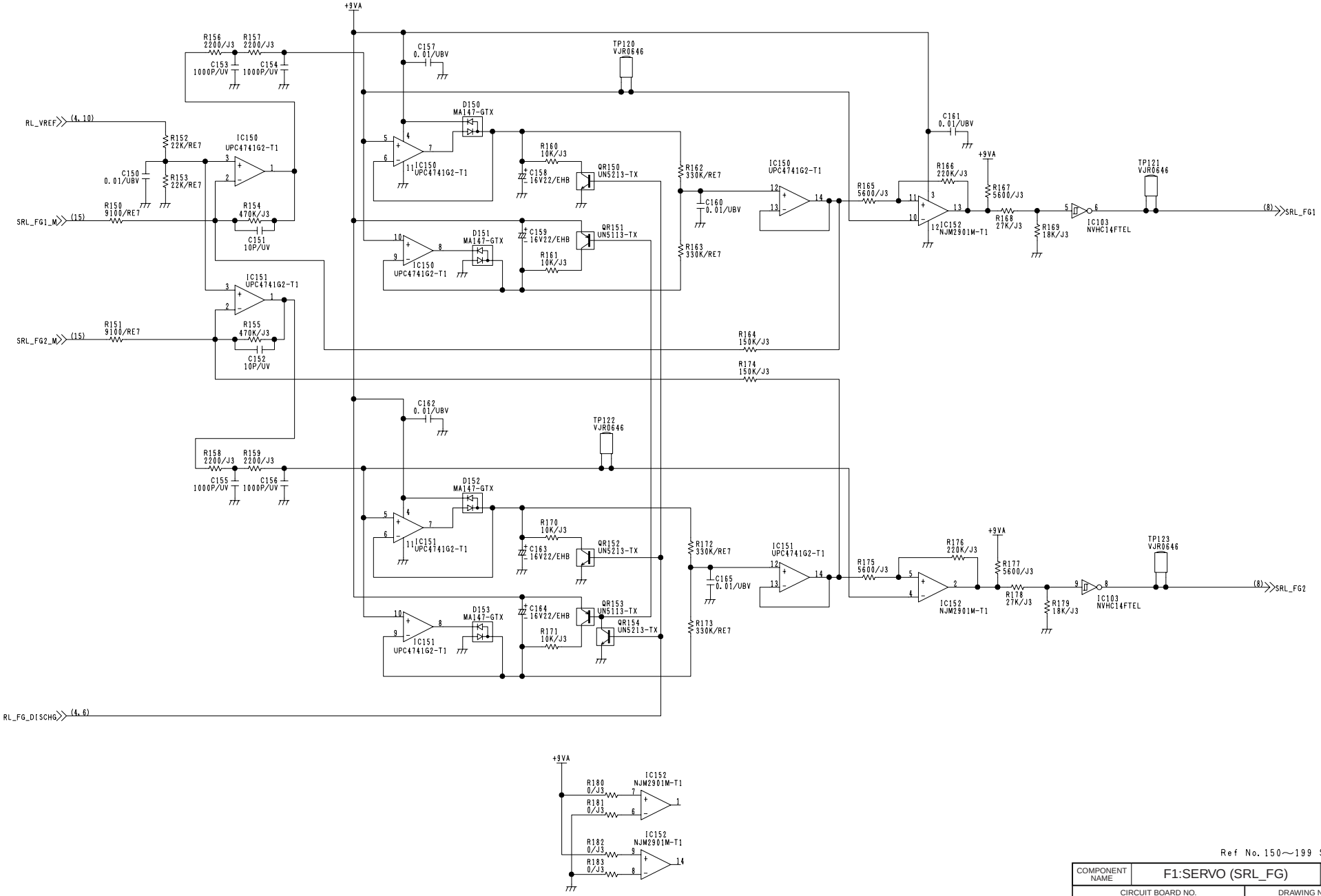

Ref No. 150～199 Series.

COMPONENT NAME	F1:SERVO (SRL_FG)	03/17
CIRCUIT BOARD NO.	DRAWING NO.	
VEP82230-1	KR2E06 (3/17)	
	SCM003	

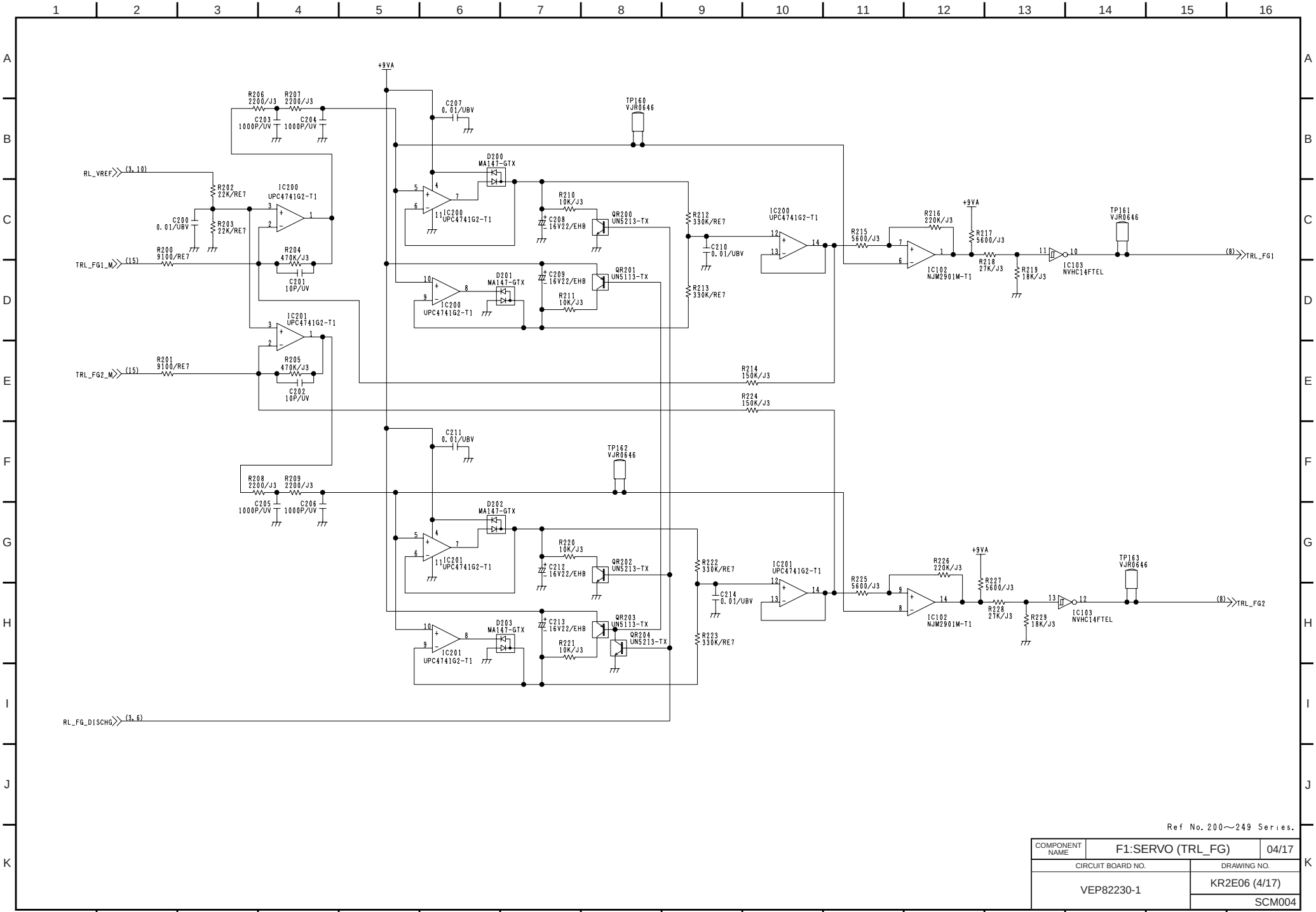

Ref No. 200～249 Series.

COMPONENT NAME	F1:SERVO (TRL_FG)	04/17
CIRCUIT BOARD NO.	DRAWING NO.	
VEP82230-1	KR2E06 (4/17)	
	SCM004	

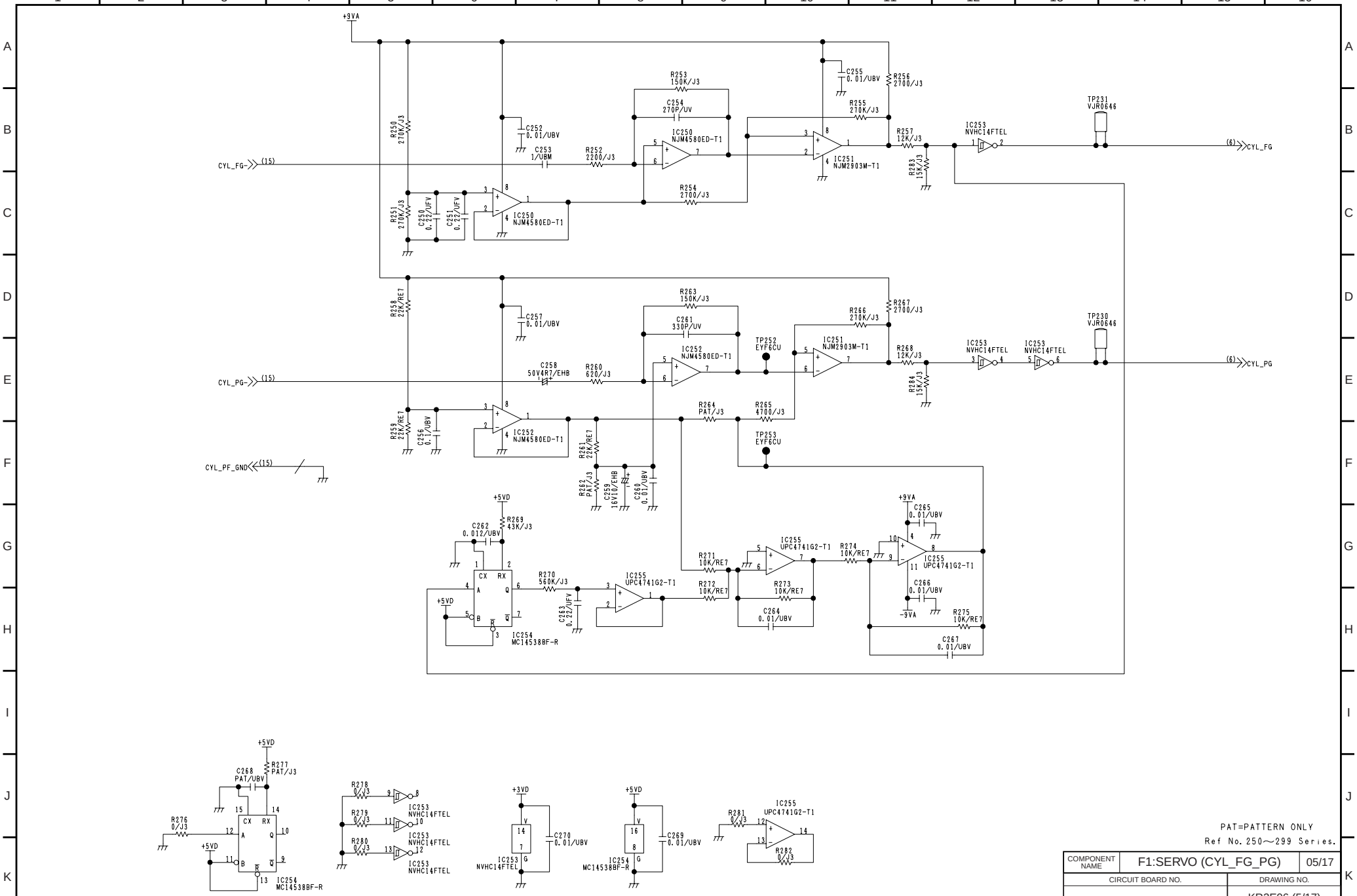

PAT=PATTERN ONLY
Ref No. 250～299 Series.

COMPONENT NAME	F1:SERVO (CYL_FG_PG)	05/17
CIRCUIT BOARD NO.	DRAWING NO.	
VEP82230-1	KR2E06 (5/17)	
	SCM005	

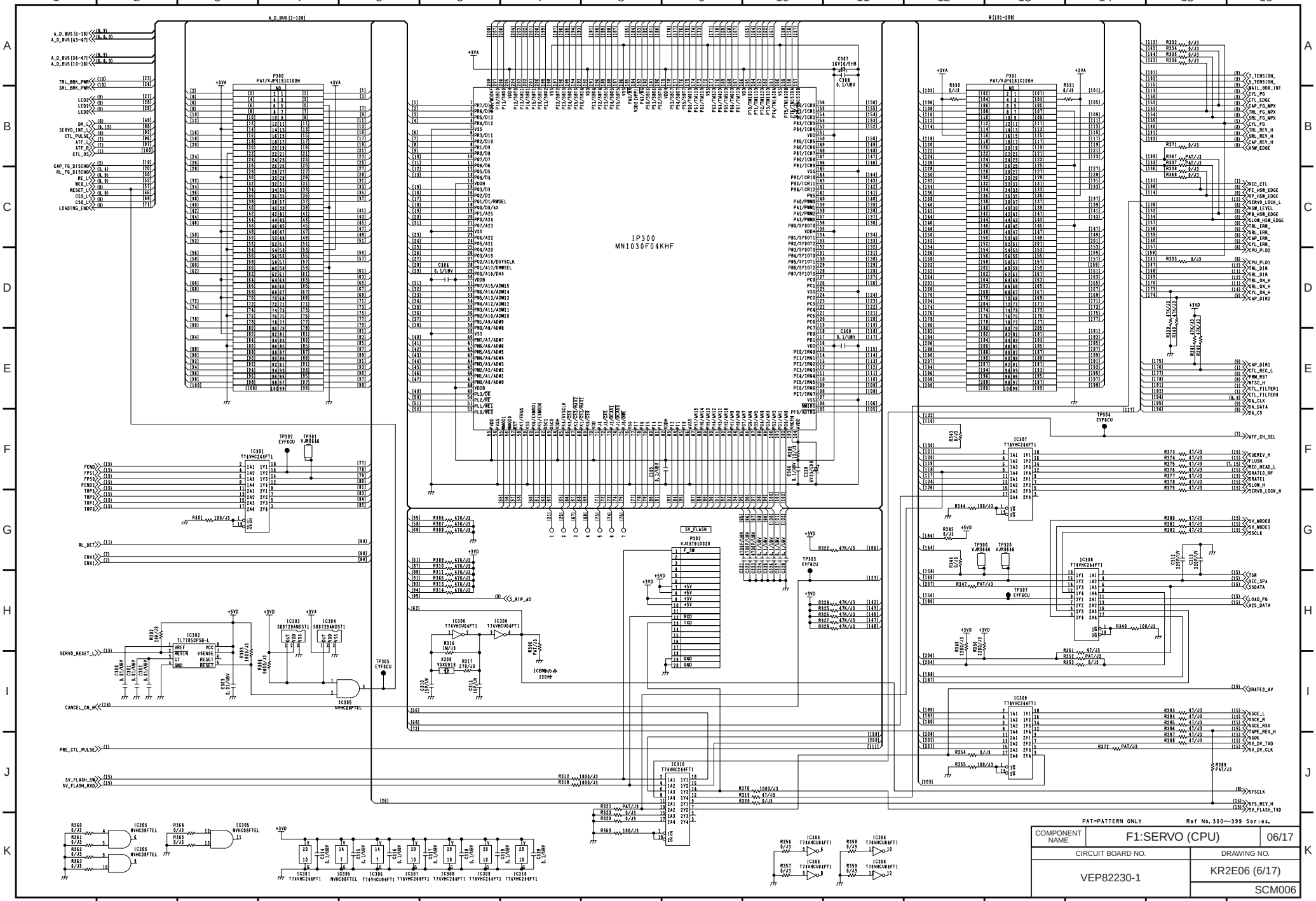

COMPONENT NAME	F1:SERVO (CPU)	06/17
CIRCUIT BOARD NO.		DRAWING NO.
VEP82230-1		KR2E06 (6/17)
		SCM006

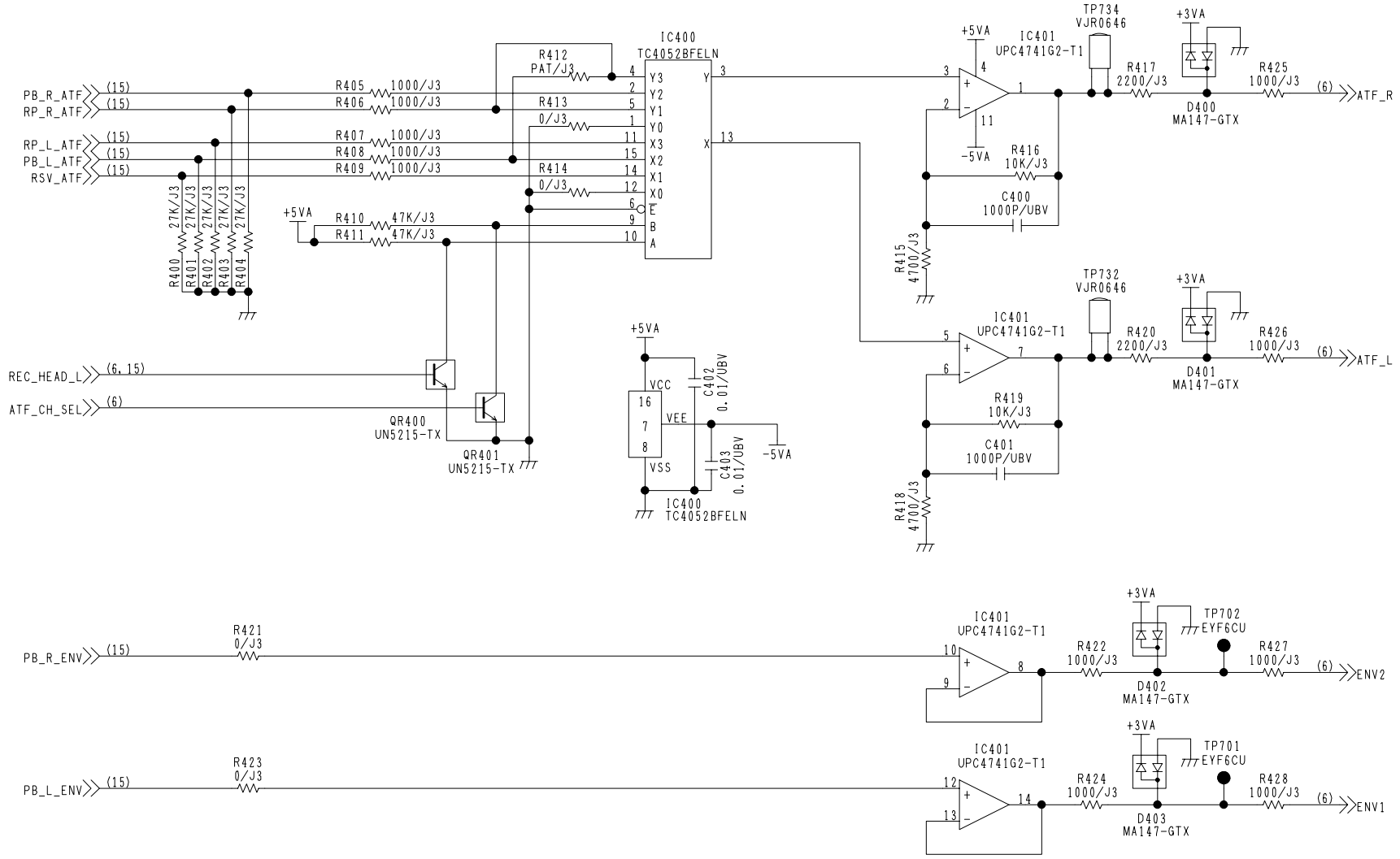

Ref No. 400～449 Series.

COMPONENT NAME	F1:SERVO (RF_IN)	07/17
CIRCUIT BOARD NO.	DRAWING NO.	
VEP82230-1	KR2E06 (7/17)	
	SCM007	

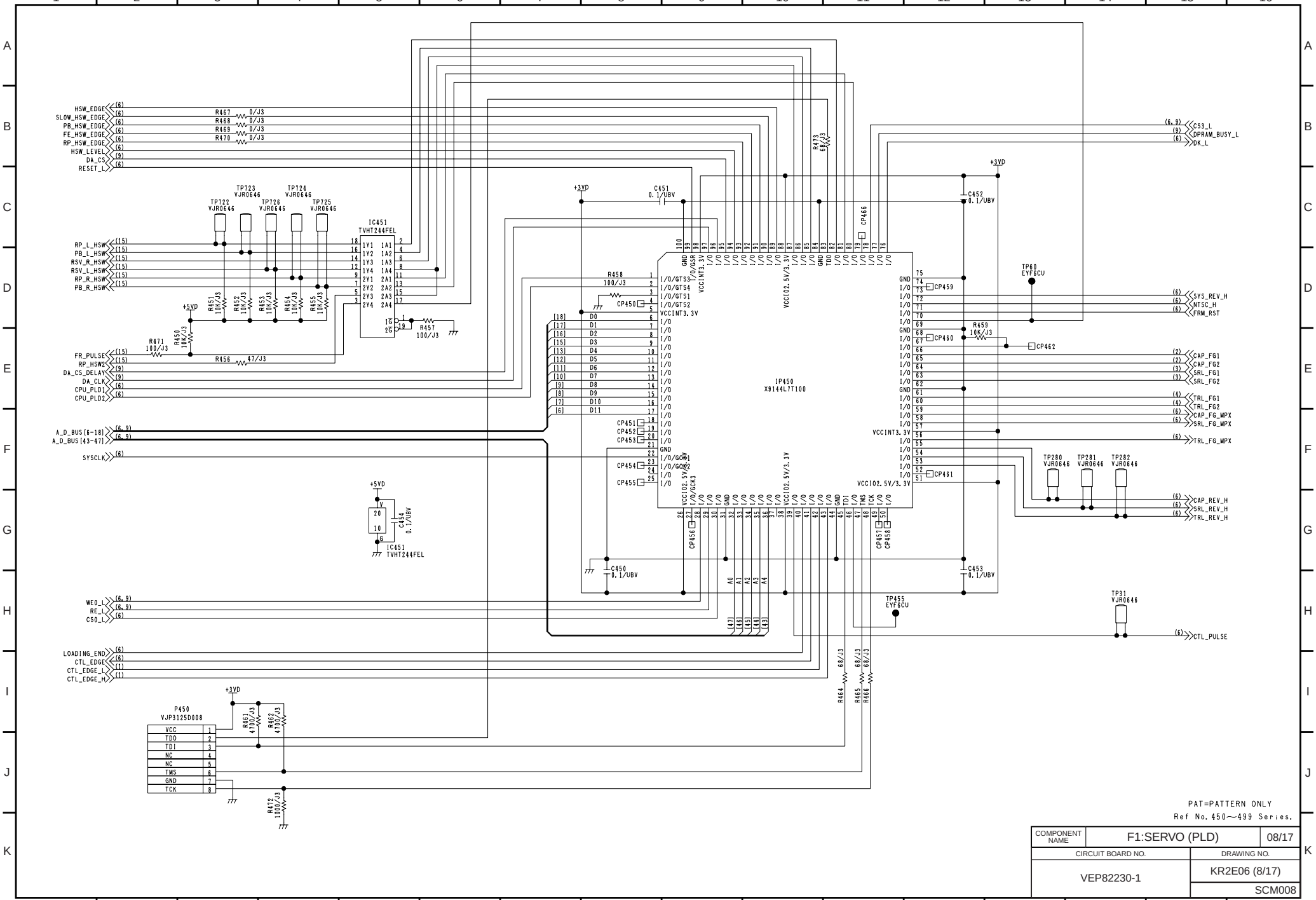

PAT=PATTERN ONLY

Ref No. 450～499 Series.

COMPONENT NAME	F1:SERVO (PLD)	08/17
CIRCUIT BOARD NO.	DRAWING NO.	
VEP82230-1	KR2E06 (8/17)	
	SCM008	

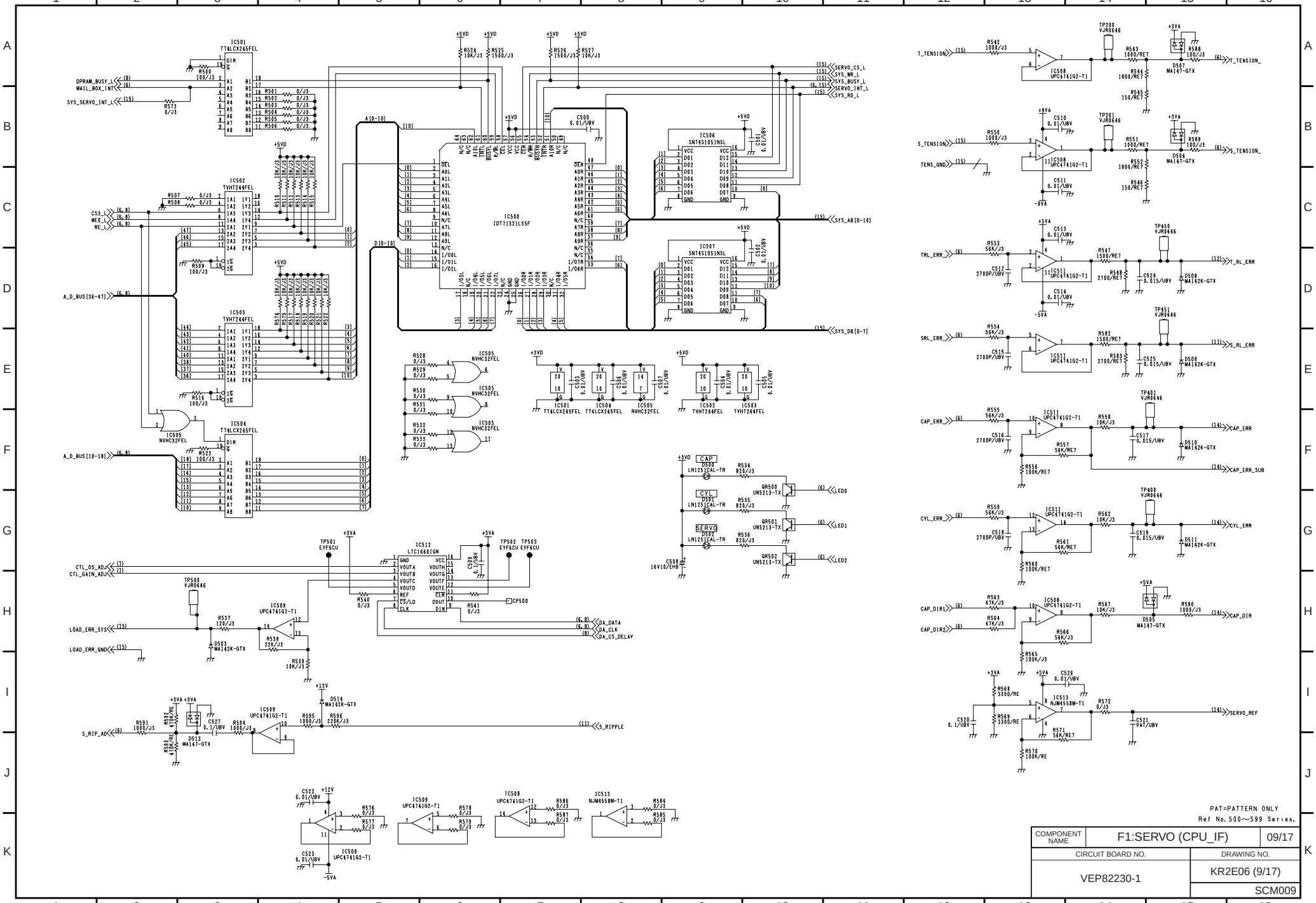
IC501 T74LCX245FEL
IC502 TVHT244FEL
IC503 TVHT244FEL
IC504 T74LCX245FEL
IC500 IDT71321L55F
IC506 SN74S1051NSL
IC507 SN74S1051NSL
IC505 NVHC32FEL
IC512 LTC1660IGN
IC508 UPC4741G2-T1
IC509 UPC4741G2-T1
IC511 UPC4741G2-T1
IC513 NJM4558M-T1
DPRAM_BUSY_L
MAIL_BOX_INT
SYS_SERVO_INT_L
CS3_L
WE0_L
RE_L
A_D_BUS[36-47]
A_D_BUS[10-18]
A[0-10]
D[0-10]
SERVO_CS_L
SYS_WR_L
SYS_BUSY_L
SERVO_INT_L
SYS_RD_L
SYS_AB[0-10]
SYS_DB[0-7]
T_TENSION
S_TENSION
TENS_GND
TRL_ERR
SRL_ERR
CAP_ERR
CYL_ERR
CAP_DIR1
CAP_DIR2
T_TENSION_
S_TENSION_
T_RL_ERR
S_RL_ERR
CAP_ERR
CAP_ERR_SUB
CYL_ERR
CAP_DIR
SERVO_REF
CAP
CYL
SERVO
LED0
LED1
LED2
CTL_OS_ADJ
CTL_GAIN_ADJ
LOAD_ERR_SYS
LOAD_ERR_GND
DA_DATA
DA_CLK
DA_CS_DELAY
CP500
S_RIP_AD
S_RIPPLE
PAT=PATTERN ONLY
Ref No.500～599 Series.
COMPONENT NAME
F1:SERVO (CPU_IF)
09/17
CIRCUIT BOARD NO.
VEP82230-1
DRAWING NO.
KR2E06 (9/17)
SCM009

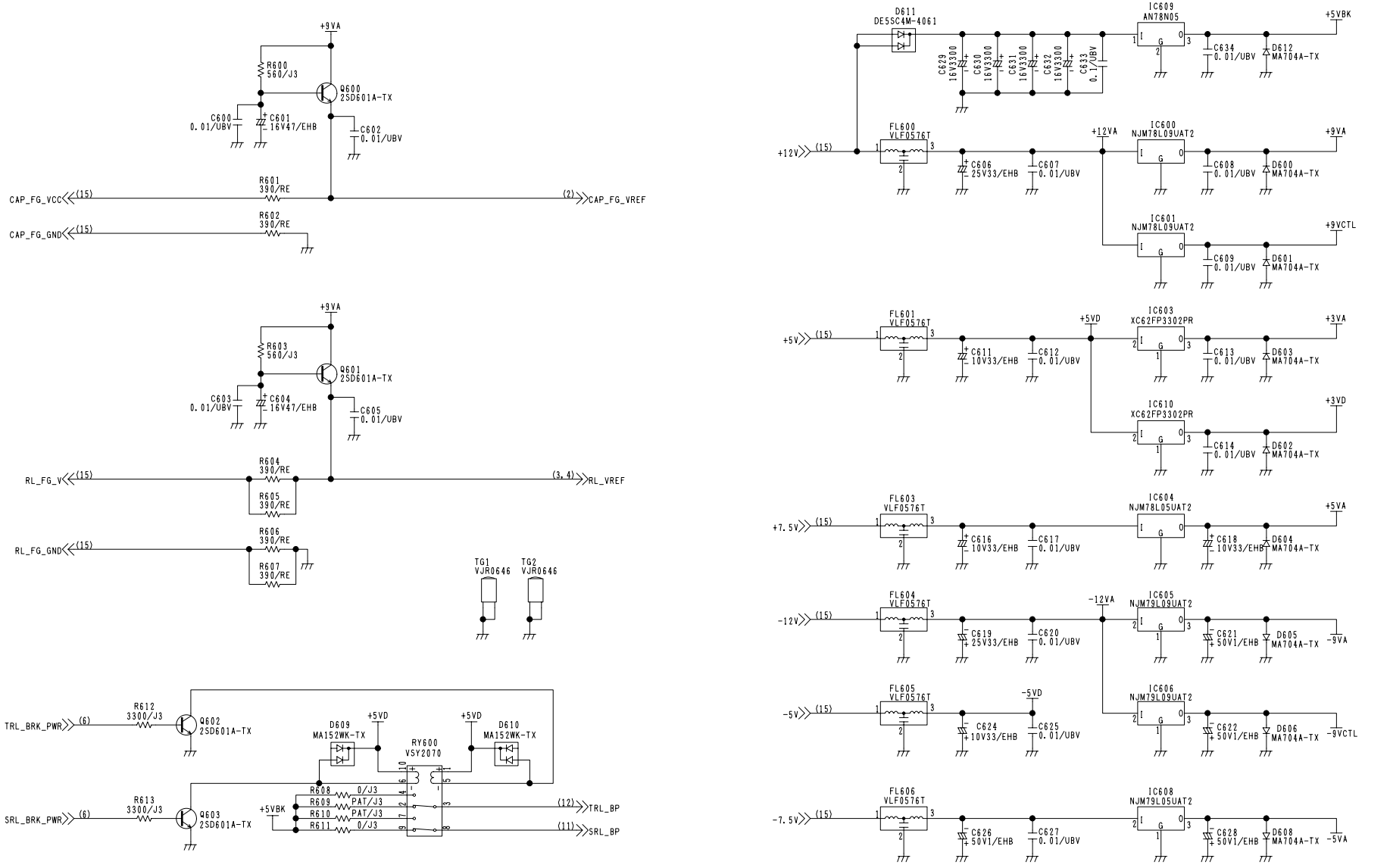

Ref No. 600～649 Series.

COMPONENT NAME	F1:SERVO (POWER)	10/17
CIRCUIT BOARD NO.		DRAWING NO.
VEP82230-1		KR2E06 (10/17)
		SCM010

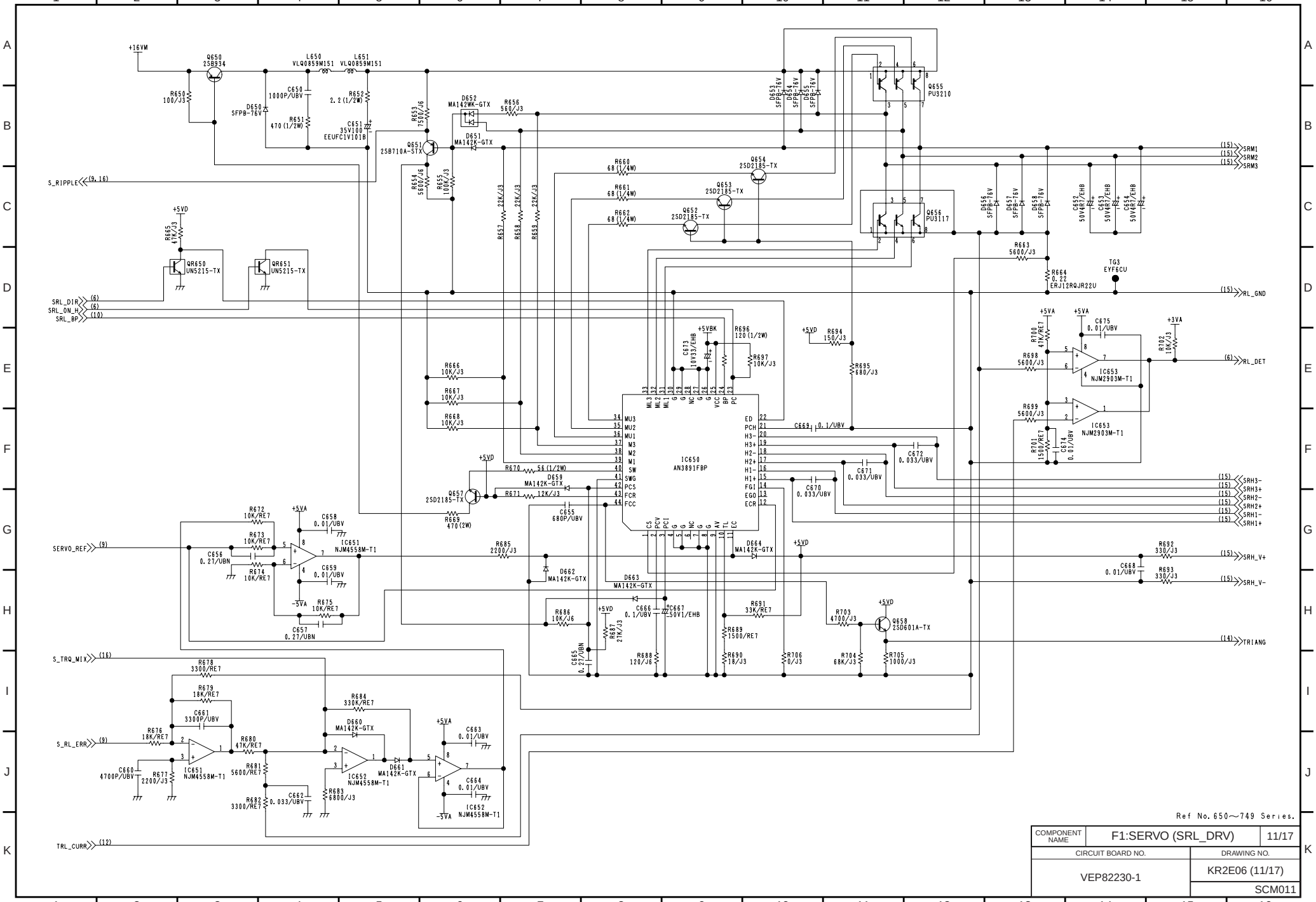

Ref No. 650～749 Series.

COMPONENT NAME	F1:SERVO (SRL_DRV)	11/17
CIRCUIT BOARD NO.	DRAWING NO.	
VEP82230-1	KR2E06 (11/17)	
	SCM011	

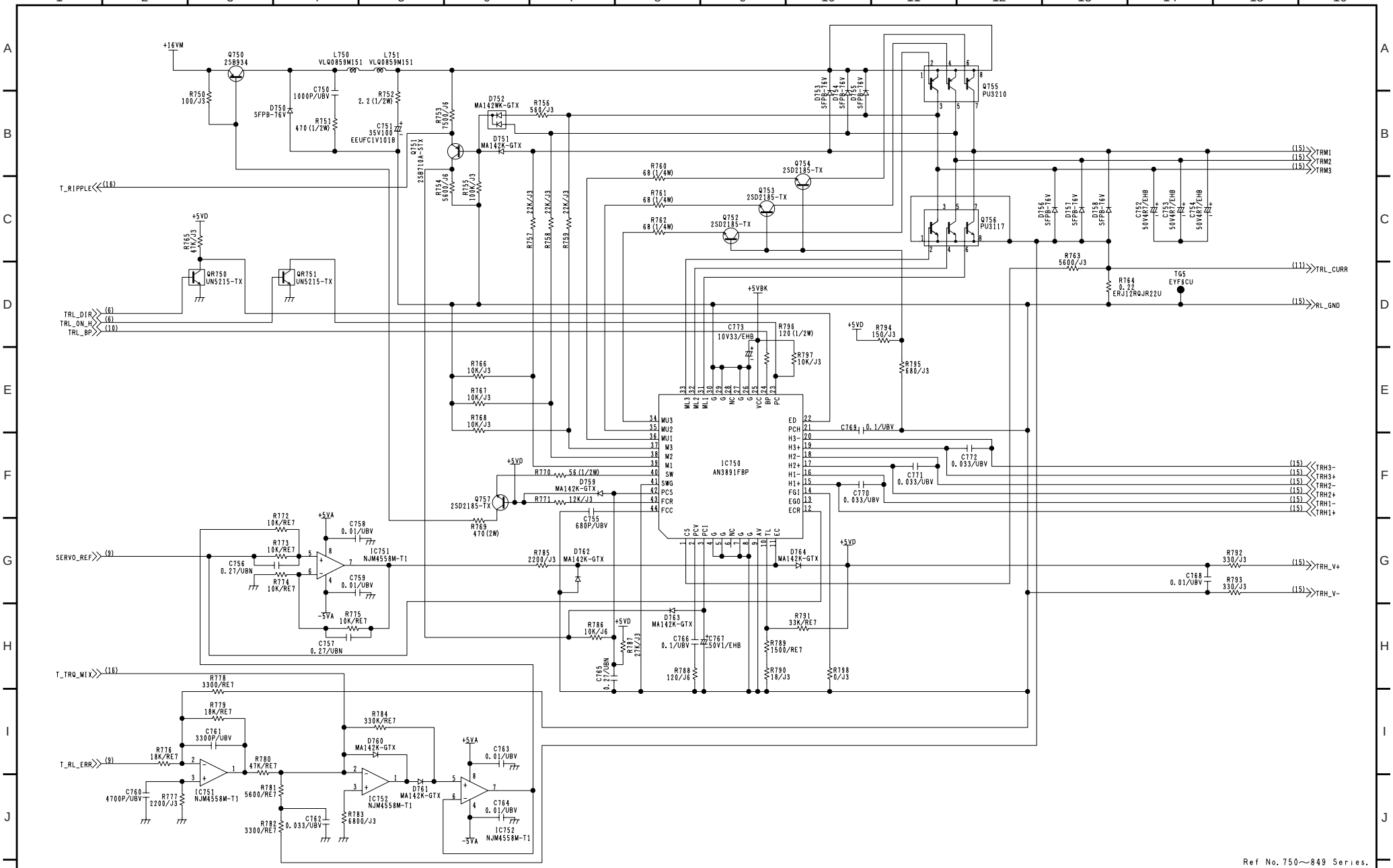

COMPONENT NAME	F1:SERVO (TRL_DRV)	12/17
CIRCUIT BOARD NO.	DRAWING NO.	
VEP82230-1	KR2E06 (12/17)	
	SCM012	

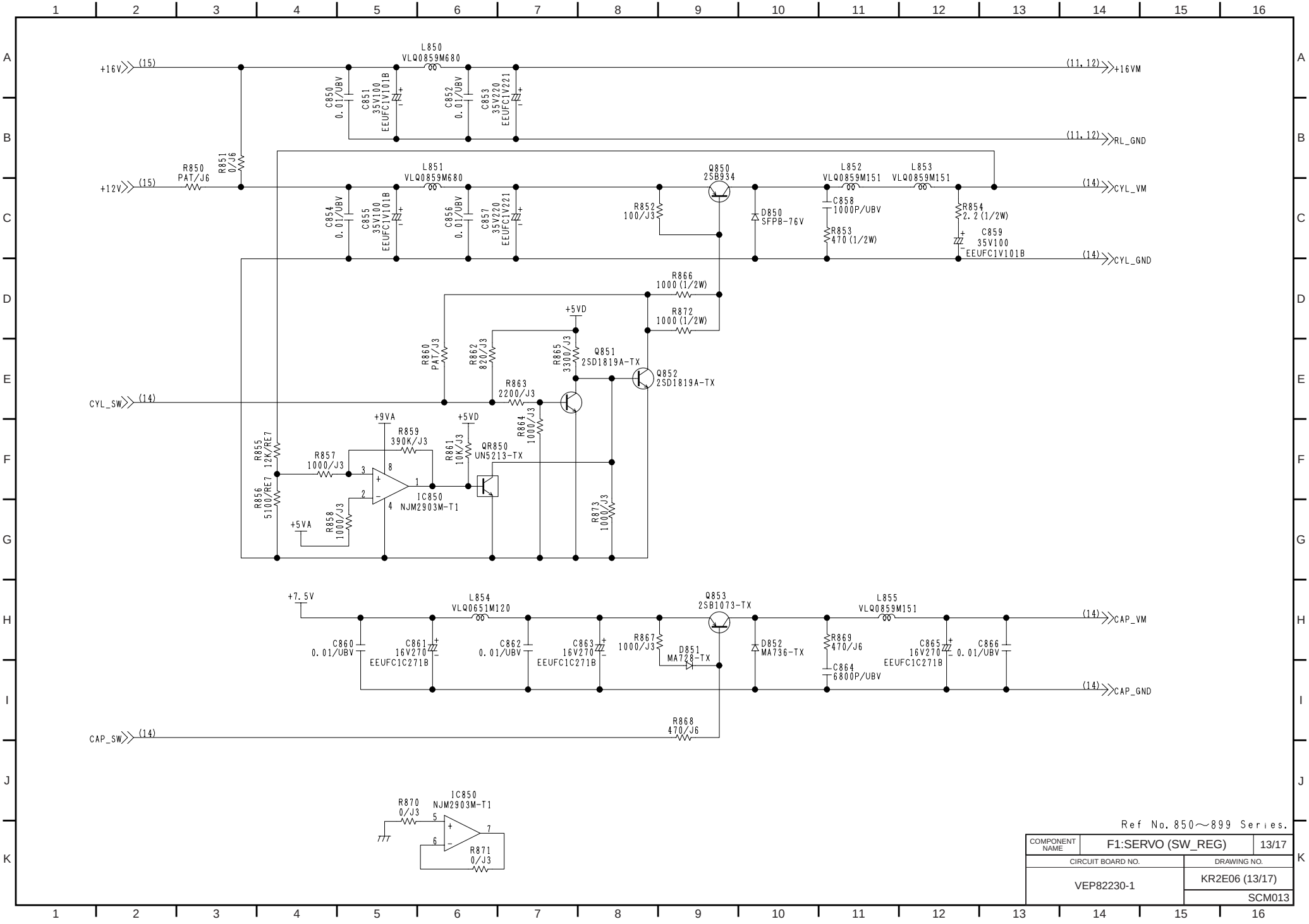
+16V (15)
L850 VLQ0859M680
C850 0.01/UBV
C851 35V100 EEUFC1V101B
C852 0.01/UBV
C853 35V220 EEUFC1V221
(11,12) +16VM
(11,12) RL_GND
R850 PAT/J6
R851 0/J6
+12V (15)
L851 VLQ0859M680
C854 0.01/UBV
C855 35V100 EEUFC1V101B
C856 0.01/UBV
C857 35V220 EEUFC1V221
Q850 2SB934
R852 100/J3
D850 SFPB-76V
L852 VLQ0859M151
L853 VLQ0859M151
C858 1000P/UBV
R853 470(1/2W)
R854 2.2(1/2W)
C859 35V100 EEUFC1V101B
(14) CYL_VM
(14) CYL_GND
R866 1000(1/2W)
R872 1000(1/2W)
+5VD
R860 PAT/J3
R862 820/J3
R865 3300/J3
Q851 2SD1819A-TX
Q852 2SD1819A-TX
R863 2200/J3
CYL_SW (14)
+9VA
R859 390K/J3
+5VD
R861 10K/J3
R864 1000/J3
QR850 UN5213-TX
R855 12K/RE7
R857 1000/J3
R856 5100/RE7
IC850 NJM2903M-T1
R858 1000/J3
+5VA
R873 1000/J3
+7.5V
L854 VLQ0651M120
Q853 2SB1073-TX
L855 VLQ0859M151
C860 0.01/UBV
C861 16V270 EEUFC1C271B
C862 0.01/UBV
C863 16V270 EEUFC1C271B
R867 1000/J3
D851 MA728-TX
D852 MA736-TX
R869 470/J6
C864 6800P/UBV
C865 16V270 EEUFC1C271B
C866 0.01/UBV
(14) CAP_VM
(14) CAP_GND
R868 470/J6
CAP_SW (14)
R870 0/J3
IC850 NJM2903M-T1
R871 0/J3
Ref No. 850～899 Series.
COMPONENT NAME
F1:SERVO (SW_REG)
13/17
CIRCUIT BOARD NO.
DRAWING NO.
VEP82230-1
KR2E06 (13/17)
SCM013

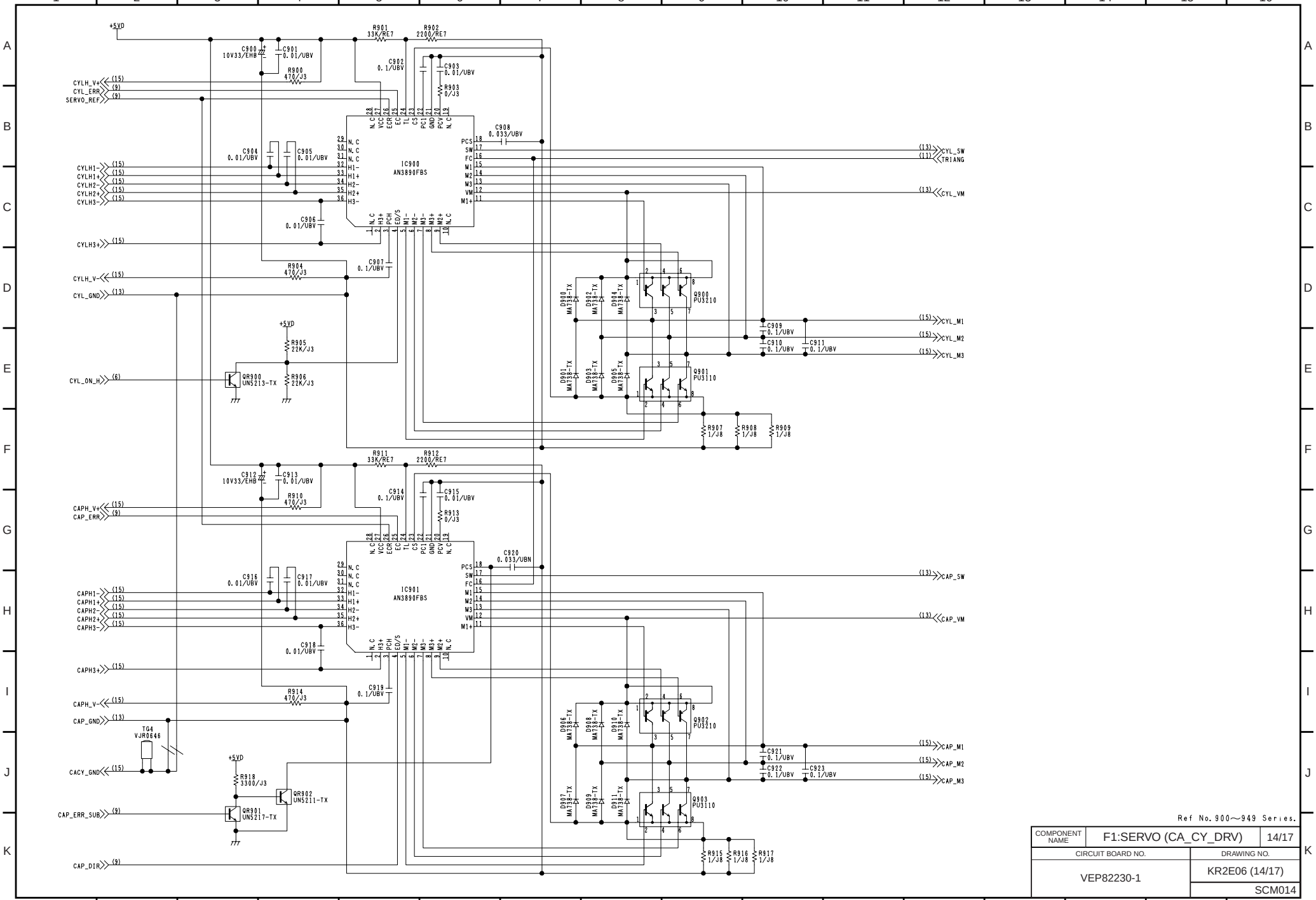

Ref No. 900～949 Series.

COMPONENT NAME	F1:SERVO (CA_CY_DRV)	14/17
CIRCUIT BOARD NO.	DRAWING NO.	
VEP82230-1	KR2E06 (14/17)	
	SCM014	

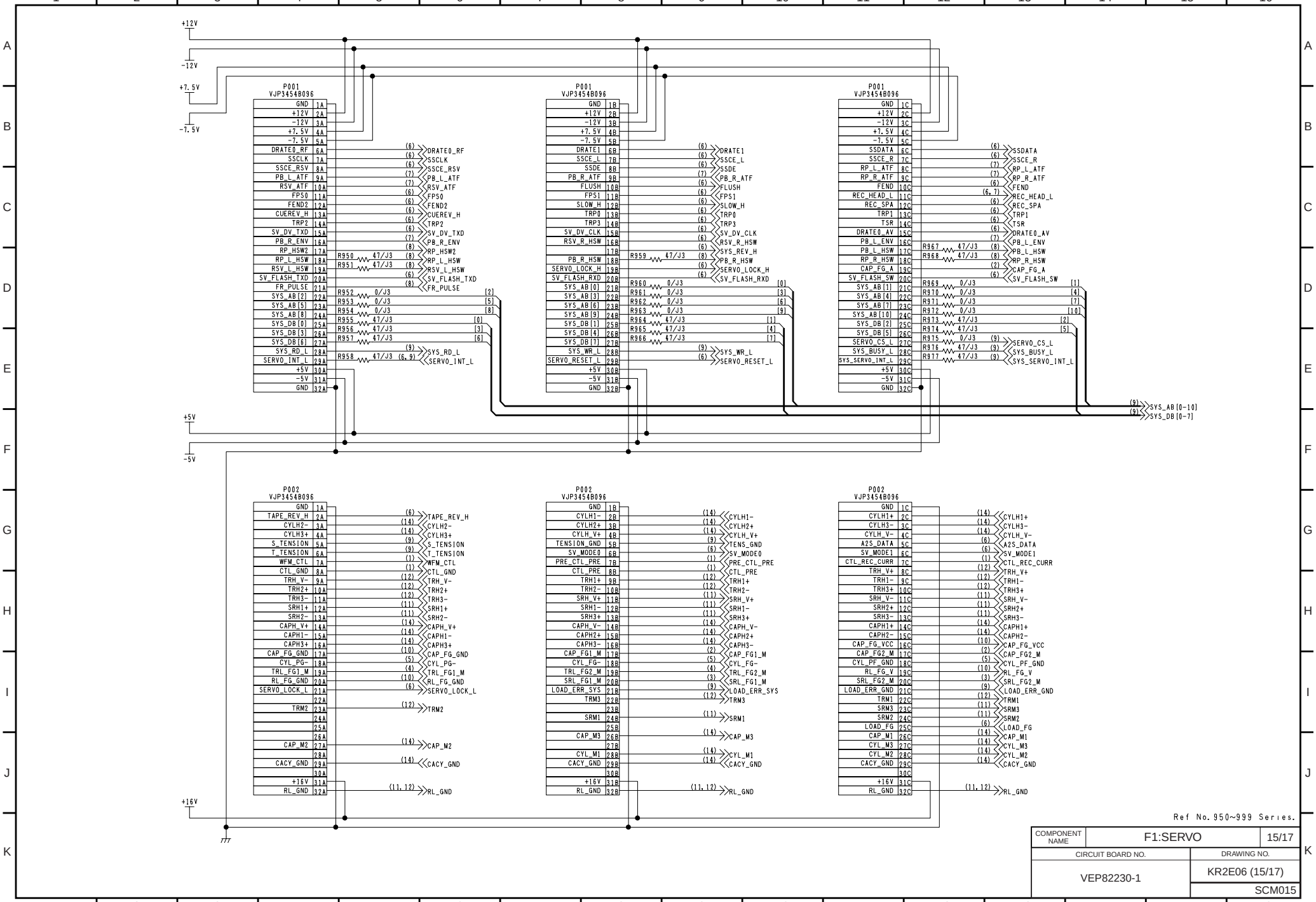
+12V
-12V
+7.5V
-7.5V
+5V
-5V
+16V
P001
VJP3454B096
P002
VJP3454B096
GND 1A
+12V 2A
-12V 3A
+7.5V 4A
-7.5V 5A
DRATE0_RF 6A
SSCLK 7A
SSCE_RSV 8A
PB_L_ATF 9A
RSV_ATF 10A
FPS0 11A
FEND2 12A
CUEREV_H 13A
TRP2 14A
SV_DV_TXD 15A
PB_R_ENV 16A
RP_HSW2 17A
RP_L_HSW 18A
RSV_L_HSW 19A
SV_FLASH_TXD 20A
FR_PULSE 21A
SYS_AB[2] 22A
SYS_AB[5] 23A
SYS_AB[8] 24A
SYS_DB[0] 25A
SYS_DB[3] 26A
SYS_DB[6] 27A
SYS_RD_L 28A
SERVO_INT_L 29A
+5V 30A
-5V 31A
GND 32A
R950 47/J3
R951 47/J3
R952 0/J3
R953 0/J3
R954 0/J3
R955 47/J3
R956 47/J3
R957 47/J3
R958 47/J3 (6,9)
(6) DRATE0_RF
(6) SSCLK
(6) SSCE_RSV
(7) PB_L_ATF
(7) RSV_ATF
(6) FPS0
(6) FEND2
(6) CUEREV_H
(6) TRP2
(6) SV_DV_TXD
(7) PB_R_ENV
(8) RP_HSW2
(8) RP_L_HSW
(8) RSV_L_HSW
(6) SV_FLASH_TXD
(8) FR_PULSE
[2]
[5]
[8]
[0]
[3]
[6]
(9) SYS_RD_L
SERVO_INT_L
GND 1B
+12V 2B
-12V 3B
+7.5V 4B
-7.5V 5B
DRATE1 6B
SSCE_L 7B
SSDE 8B
PB_R_ATF 9B
FLUSH 10B
FPS1 11B
SLOW_H 12B
TRP0 13B
TRP3 14B
SV_DV_CLK 15B
RSV_R_HSW 16B
17B
PB_R_HSW 18B
SERVO_LOCK_H 19B
SV_FLASH_RXD 20B
SYS_AB[0] 21B
SYS_AB[3] 22B
SYS_AB[6] 23B
SYS_AB[9] 24B
SYS_DB[1] 25B
SYS_DB[4] 26B
SYS_DB[7] 27B
SYS_WR_L 28B
SERVO_RESET_L 29B
+5V 30B
-5V 31B
GND 32B
R959 47/J3
R960 0/J3
R961 0/J3
R962 0/J3
R963 0/J3
R964 47/J3
R965 47/J3
R966 47/J3
(6) DRATE1
(6) SSCE_L
(6) SSDE
(7) PB_R_ATF
(6) FLUSH
(6) FPS1
(6) SLOW_H
(6) TRP0
(6) TRP3
(6) SV_DV_CLK
(6) RSV_R_HSW
(6) SYS_REV_H
(8) PB_R_HSW
(6) SERVO_LOCK_H
(6) SV_FLASH_RXD
[0]
[3]
[6]
[9]
[1]
[4]
[7]
(9) SYS_WR_L
(6) SERVO_RESET_L
GND 1C
+12V 2C
-12V 3C
+7.5V 4C
-7.5V 5C
SSDATA 6C
SSCE_R 7C
RP_L_ATF 8C
RP_R_ATF 9C
FEND 10C
REC_HEAD_L 11C
REC_SPA 12C
TRP1 13C
TSR 14C
DRATE0_AV 15C
PB_L_ENV 16C
PB_L_HSW 17C
RP_R_HSW 18C
CAP_FG_A 19C
SV_FLASH_SW 20C
SYS_AB[1] 21C
SYS_AB[4] 22C
SYS_AB[7] 23C
SYS_AB[10] 24C
SYS_DB[2] 25C
SYS_DB[5] 26C
SERVO_CS_L 27C
SYS_BUSY_L 28C
SYS_SERVO_INT_L 29C
+5V 30C
-5V 31C
GND 32C
R967 47/J3
R968 47/J3
R969 0/J3
R970 0/J3
R971 0/J3
R972 0/J3
R973 47/J3
R974 47/J3
R975 0/J3
R976 47/J3
R977 47/J3
(6) SSDATA
(6) SSCE_R
(7) RP_L_ATF
(7) RP_R_ATF
(6) FEND
(6,7) REC_HEAD_L
(6) REC_SPA
(6) TRP1
(6) TSR
(6) DRATE0_AV
(7) PB_L_ENV
(8) PB_L_HSW
(8) RP_R_HSW
(2) CAP_FG_A
(6) SV_FLASH_SW
[1]
[4]
[7]
[10]
[2]
[5]
(9) SERVO_CS_L
(9) SYS_BUSY_L
(9) SYS_SERVO_INT_L
(9) SYS_AB[0-10]
(9) SYS_DB[0-7]
GND 1A
TAPE_REV_H 2A
CYLH2- 3A
CYLH3+ 4A
S_TENSION 5A
T_TENSION 6A
WFM_CTL 7A
CTL_GND 8A
TRH_V- 9A
TRH2+ 10A
TRH3- 11A
SRH1+ 12A
SRH2- 13A
CAPH_V+ 14A
CAPH1- 15A
CAPH3+ 16A
CAP_FG_GND 17A
CYL_PG- 18A
TRL_FG1_M 19A
RL_FG_GND 20A
SERVO_LOCK_L 21A
22A
TRM2 23A
24A
25A
26A
CAP_M2 27A
28A
CACY_GND 29A
30A
+16V 31A
RL_GND 32A
(6) TAPE_REV_H
(14) CYLH2-
(14) CYLH3+
(9) S_TENSION
(9) T_TENSION
(1) WFM_CTL
(1) CTL_GND
(12) TRH_V-
(12) TRH2+
(12) TRH3-
(11) SRH1+
(11) SRH2-
(14) CAPH_V+
(14) CAPH1-
(14) CAPH3+
(10) CAP_FG_GND
(5) CYL_PG-
(4) TRL_FG1_M
(10) RL_FG_GND
(6) SERVO_LOCK_L
(12) TRM2
(14) CAP_M2
(14) CACY_GND
(11,12) RL_GND
GND 1B
CYLH1- 2B
CYLH2+ 3B
CYLH_V+ 4B
TENSION_GND 5B
SV_MODE0 6B
PRE_CTL_PRE 7B
CTL_PRE 8B
TRH1+ 9B
TRH2- 10B
SRH_V+ 11B
SRH1- 12B
SRH3+ 13B
CAPH_V- 14B
CAPH2+ 15B
CAPH3- 16B
CAP_FG1_M 17B
CYL_FG- 18B
TRL_FG2_M 19B
SRL_FG1_M 20B
LOAD_ERR_SYS 21B
TRM3 22B
23B
SRM1 24B
25B
CAP_M3 26B
27B
CYL_M1 28B
CACY_GND 29B
30B
+16V 31B
RL_GND 32B
(14) CYLH1-
(14) CYLH2+
(14) CYLH_V+
(9) TENS_GND
(6) SV_MODE0
(1) PRE_CTL_PRE
(1) CTL_PRE
(12) TRH1+
(12) TRH2-
(11) SRH_V+
(11) SRH1-
(11) SRH3+
(14) CAPH_V-
(14) CAPH2+
(14) CAPH3-
(2) CAP_FG1_M
(5) CYL_FG-
(4) TRL_FG2_M
(3) SRL_FG1_M
(9) LOAD_ERR_SYS
(12) TRM3
(11) SRM1
(14) CAP_M3
(14) CYL_M1
(14) CACY_GND
(11,12) RL_GND
GND 1C
CYLH1+ 2C
CYLH3- 3C
CYLH_V- 4C
A2S_DATA 5C
SV_MODE1 6C
CTL_REC_CURR 7C
TRH_V+ 8C
TRH1- 9C
TRH3+ 10C
SRH_V- 11C
SRH2+ 12C
SRH3- 13C
CAPH1+ 14C
CAPH2- 15C
CAP_FG_VCC 16C
CAP_FG2_M 17C
CYL_PF_GND 18C
RL_FG_V 19C
SRL_FG2_M 20C
LOAD_ERR_GND 21C
TRM1 22C
SRM3 23C
SRM2 24C
LOAD_FG 25C
CAP_M1 26C
CYL_M3 27C
CYL_M2 28C
CACY_GND 29C
30C
+16V 31C
RL_GND 32C
(14) CYLH1+
(14) CYLH3-
(14) CYLH_V-
(6) A2S_DATA
(6) SV_MODE1
(1) CTL_REC_CURR
(12) TRH_V+
(12) TRH1-
(12) TRH3+
(11) SRH_V-
(11) SRH2+
(11) SRH3-
(14) CAPH1+
(14) CAPH2-
(10) CAP_FG_VCC
(2) CAP_FG2_M
(5) CYL_PF_GND
(10) RL_FG_V
(3) SRL_FG2_M
(9) LOAD_ERR_GND
(12) TRM1
(11) SRM3
(11) SRM2
(6) LOAD_FG
(14) CAP_M1
(14) CYL_M3
(14) CYL_M2
(14) CACY_GND
(11,12) RL_GND
Ref No. 950~999 Series.
COMPONENT NAME
F1:SERVO
15/17
CIRCUIT BOARD NO.
VEP82230-1
DRAWING NO.
KR2E06 (15/17)
SCM015

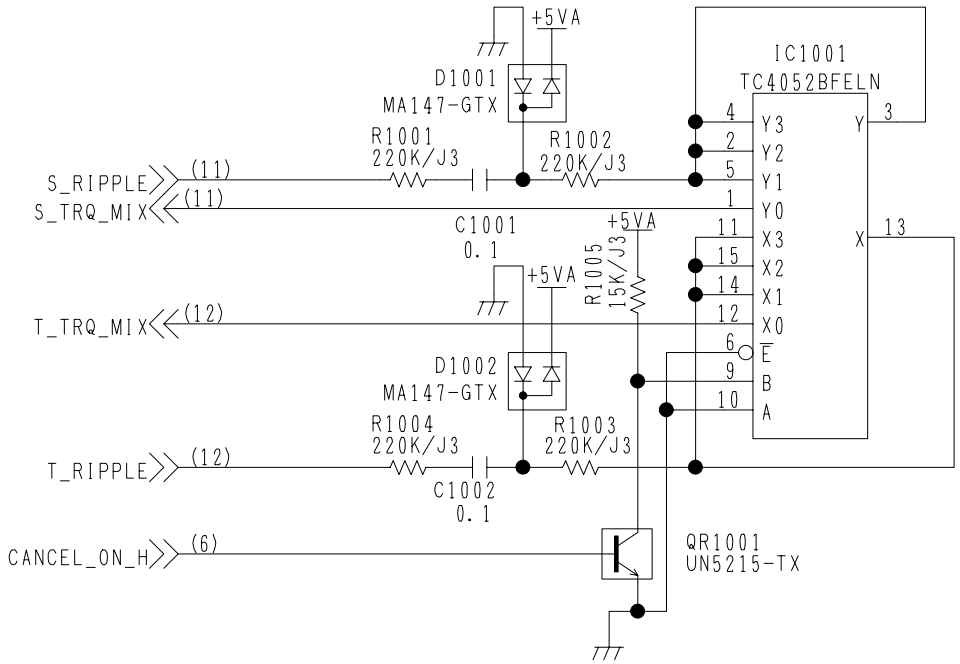

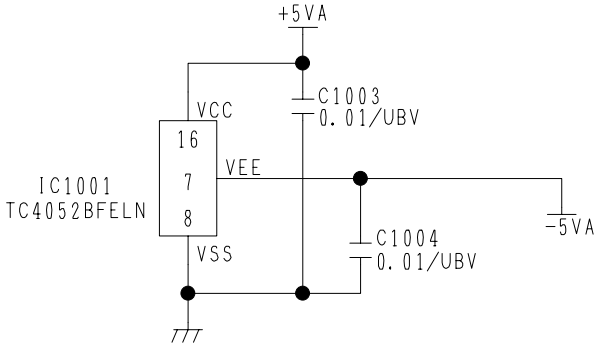

COMPONENT NAME	F1:SERVO (SERVO_SUB1)	16/17
CIRCUIT BOARD NO.	DRAWING NO.	
VEP82230-1	KR2E06 (16/17)	
	SCM016	

IP300 MN1030F04KHF			IP450 X9144L7T100		
VSI3512			VSI3511		

COMPONENT NAME	F1:SERVO (SOFT)	17/17
CIRCUIT BOARD NO.	DRAWING NO.	
VEP82230-1	KR2E06 (17/17)	
	SCM017	

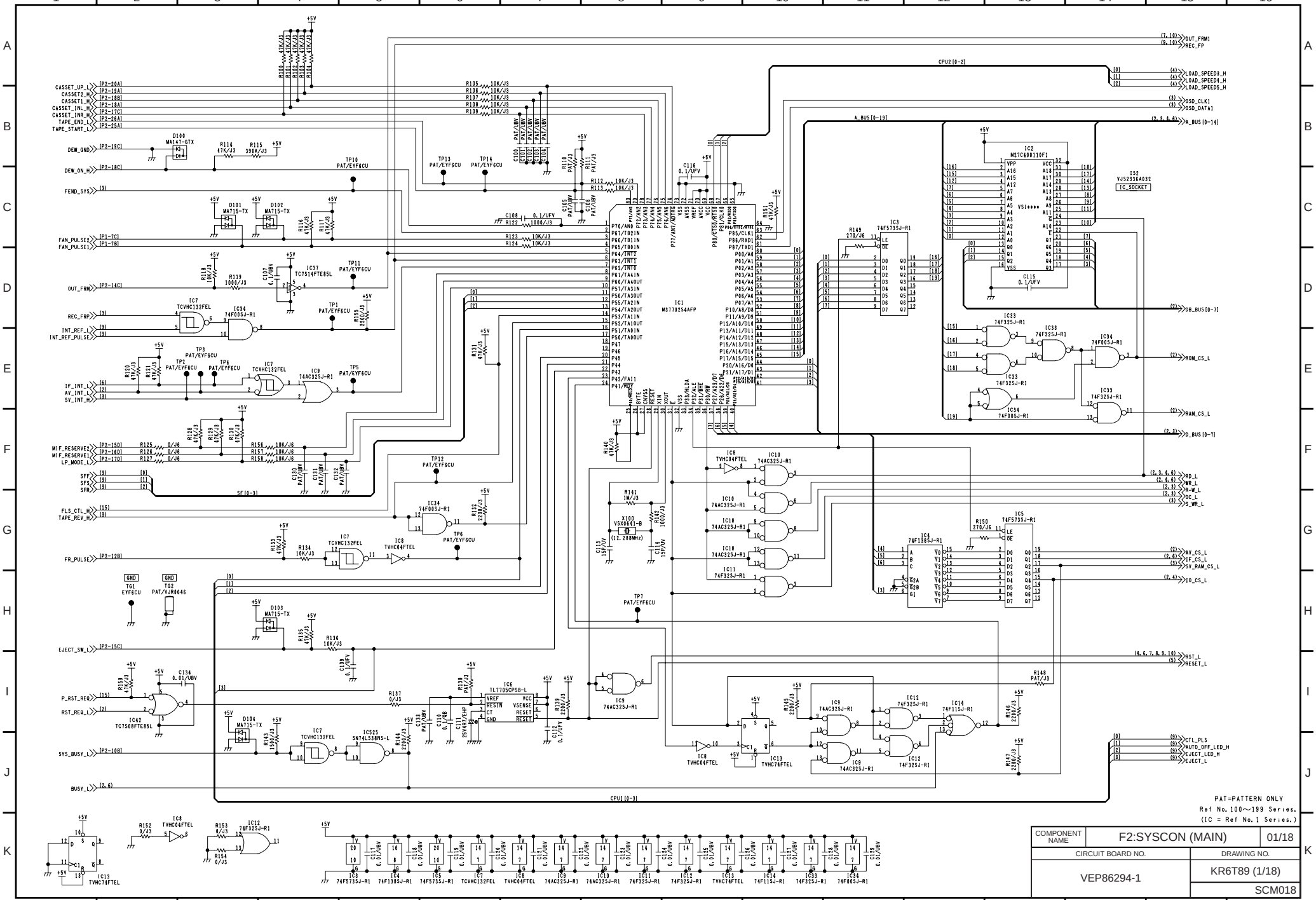

COMPONENT NAME	F2:SYSCON (MAIN)	01/18
CIRCUIT BOARD NO.		DRAWING NO.
VEP86294-1		KR6T89 (1/18)
		SCM018

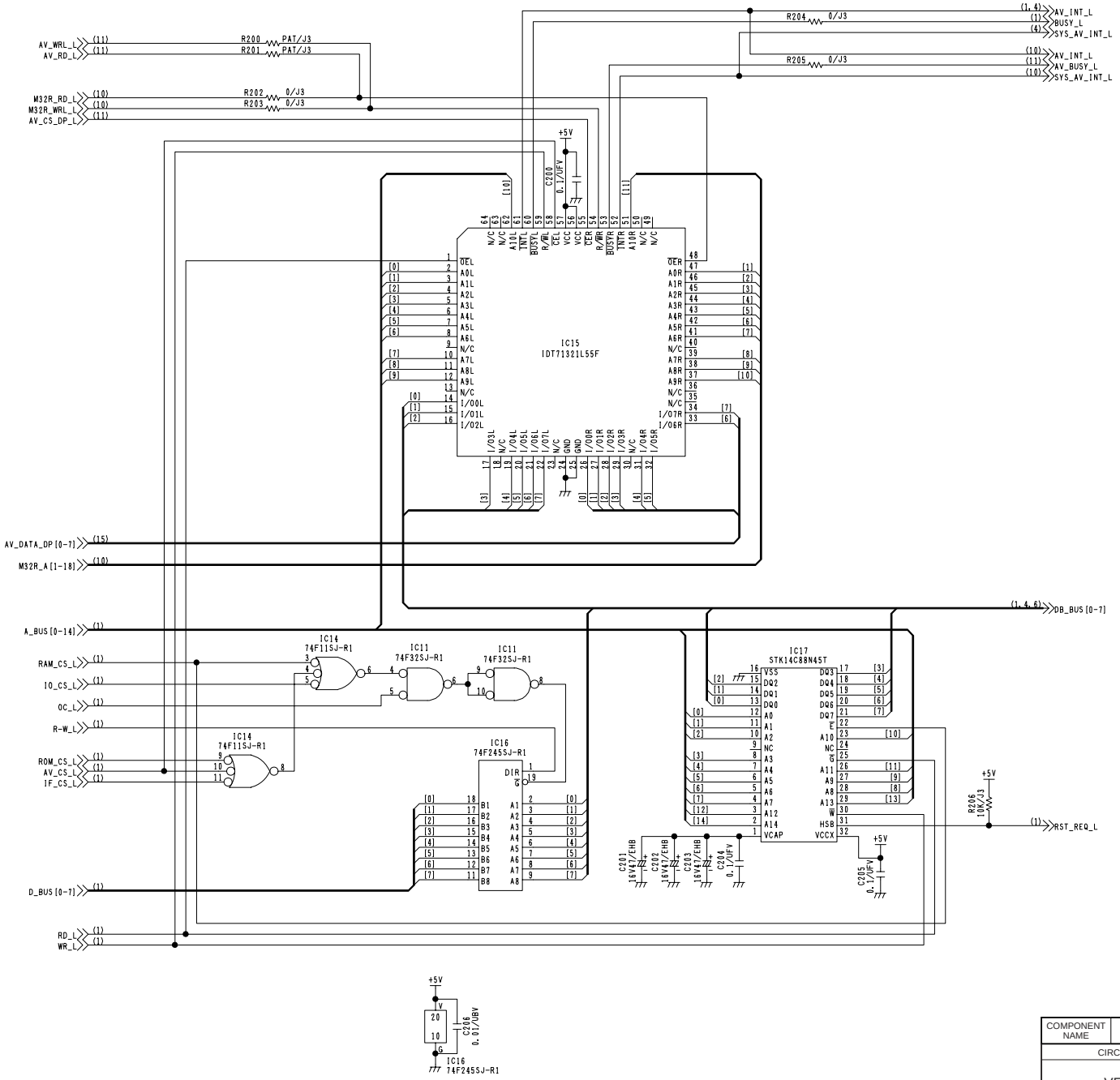

PAT=PATTERN ONLY
Ref No. 200～299 Series.
(IC = Ref No. 1 Series.)

COMPONENT NAME	F2:SYSCON (MAIN)	02/18
CIRCUIT BOARD NO.	DRAWING NO.	
VEP86294-1	KR6T89 (2/18)	
	SCM019	

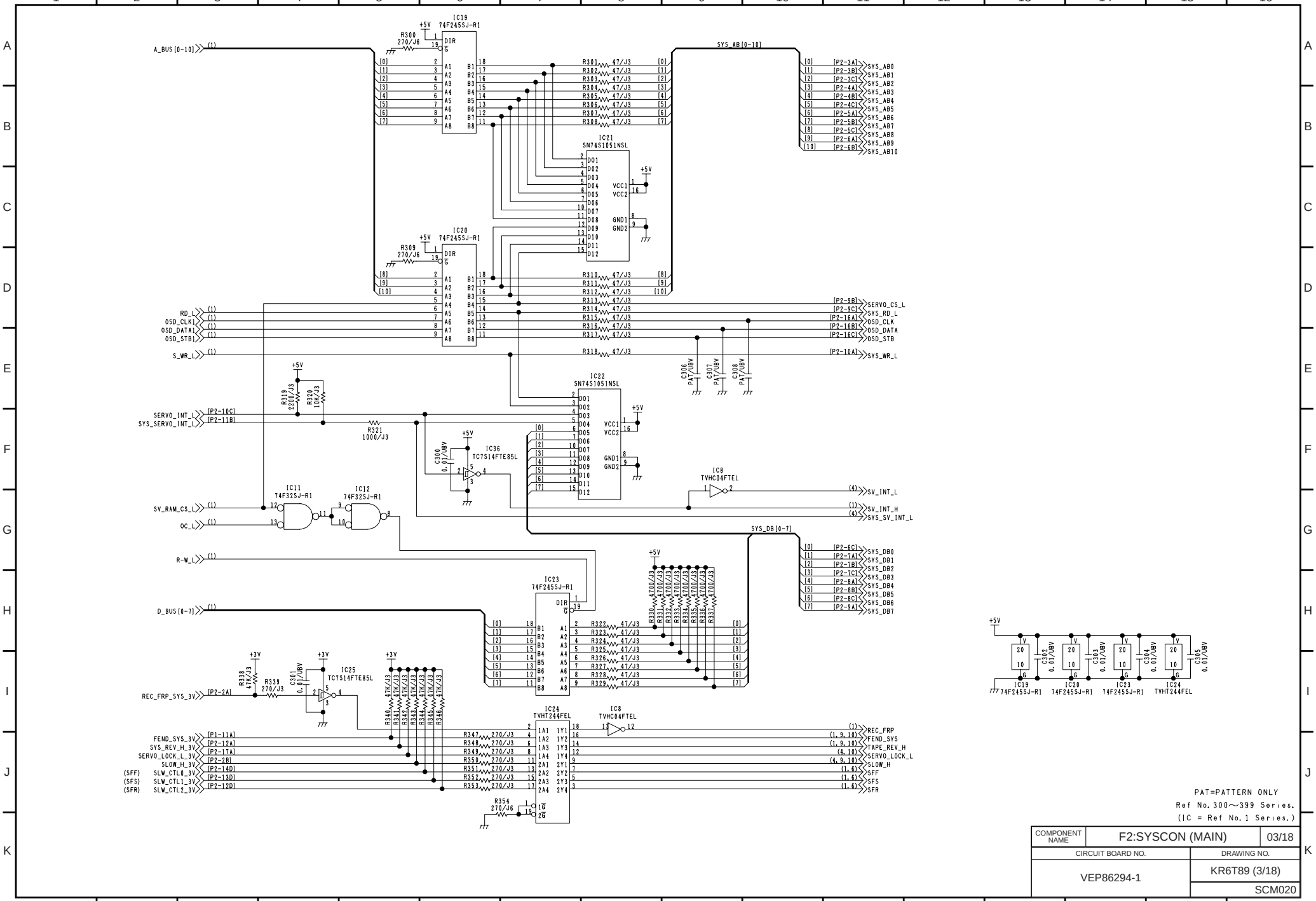
IC19 74F245SJ-R1
IC20 74F245SJ-R1
IC21 SN74S1051NSL
IC22 SN74S1051NSL
IC23 74F245SJ-R1
IC24 TVHT244FEL
IC11 74F32SJ-R1
IC12 74F32SJ-R1
IC36 TC7S14FTE85L
IC25 TC7S14FTE85L
IC8 TVHC04FTEL
A_BUS[0-10]
SYS_AB[0-10]
SYS_DB[0-7]
D_BUS[0-7]
RD_L
OSD_CLK1
OSD_DATA1
OSD_STB1
S_WR_L
SERVO_INT_L
SYS_SERVO_INT_L
SV_RAM_CS_L
OC_L
R-W_L
REC_FRP_SYS_3V
FEND_SYS_3V
SYS_REV_H_3V
SERVO_LOCK_L_3V
SLOW_H_3V
SLW_CTL0_3V
SLW_CTL1_3V
SLW_CTL2_3V
SERVO_CS_L
SYS_RD_L
OSD_CLK
OSD_DATA
OSD_STB
SYS_WR_L
SV_INT_L
SV_INT_H
SYS_SV_INT_L
REC_FRP
FEND_SYS
TAPE_REV_H
SERVO_LOCK_L
SLOW_H
SFF
SF5
SFR
PAT=PATTERN ONLY
Ref No. 300～399 Series.
(IC = Ref No. 1 Series.)
COMPONENT NAME
F2:SYSCON (MAIN)
03/18
CIRCUIT BOARD NO.
DRAWING NO.
VEP86294-1
KR6T89 (3/18)
SCM020

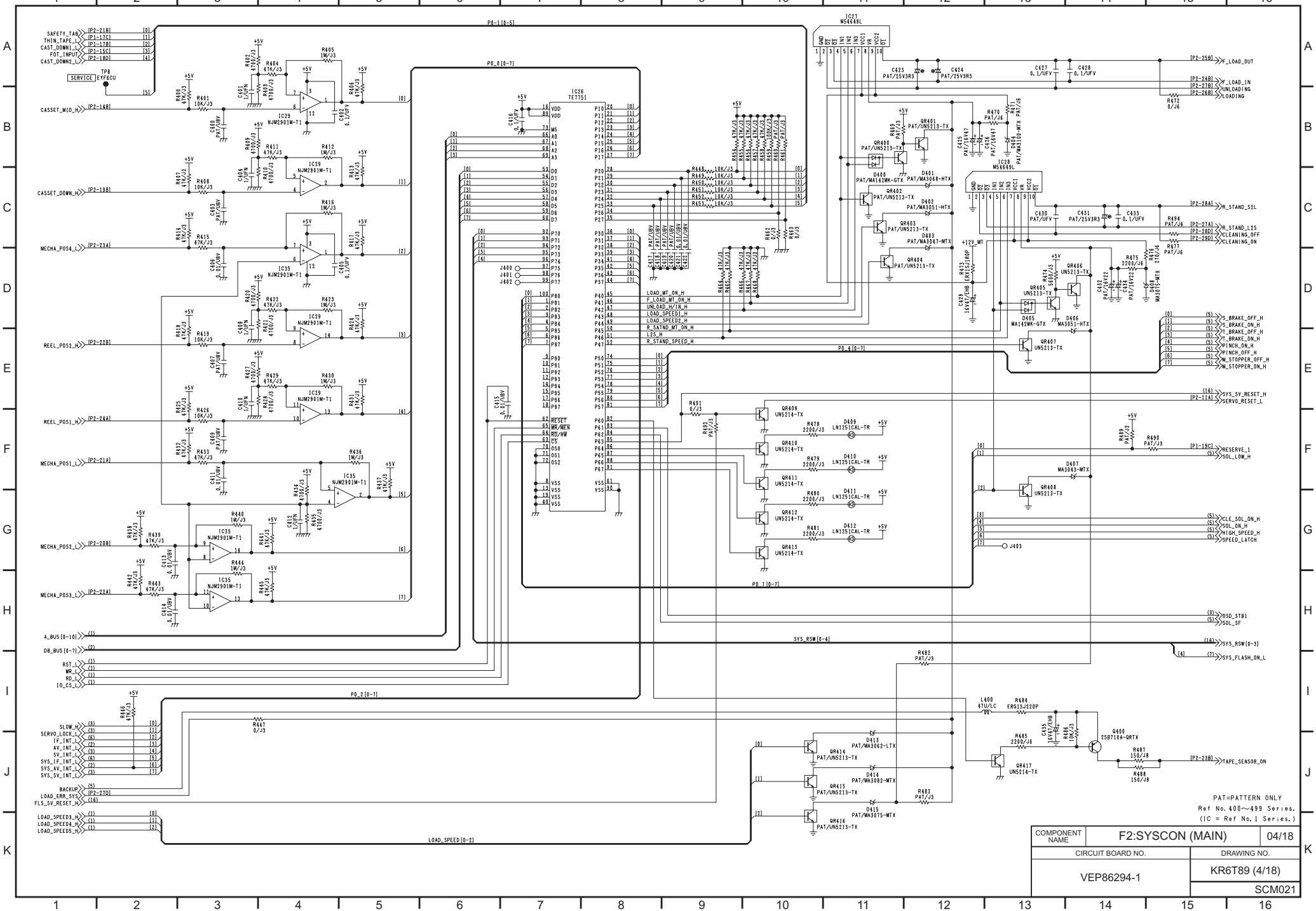
SAFETY_TAB
THIN_TAPE_H
CAST_DOWN1_L
FOT_INPUT
CAST_DOWN2_L
SERVICE
TP8
EYF6CU
CASSET_MID_H
CASSET_DOWN_H
MECHA_POS4_L
REEL_POS2_H
REEL_POS1_H
MECHA_POS1_L
MECHA_POS2_L
MECHA_POS3_L
A_BUS[0-10]
DB_BUS[0-7]
RST_L
WR_L
RD_L
IO_CS_L
SLOW_H
SERVO_LOCK_L
IF_INT_L
AV_INT_L
SV_INT_L
SYS_IF_INT_L
SYS_AV_INT_L
SYS_SV_INT_L
BACKUP
LOAD_ERR_SYS
FLS_SV_RESET_H
LOAD_SPEED3_H
LOAD_SPEED4_H
LOAD_SPEED5_H
P0_1[0-5]
P0_0[0-7]
P0_4[0-7]
P0_7[0-7]
P0_2[0-7]
LOAD_SPEED[0-2]
SYS_RSW[0-4]
IC26
TE7751
IC27
M54649L
IC28
M54649L
IC29
NJM2901M-T1
IC35
NJM2901M-T1
LOAD_MT_ON_H
F_LOAD_MT_ON_H
UNLOAD_H/IN_H
LOAD_SPEED1_H
LOAD_SPEED2_H
R_SATND_MT_ON_H
L25_H
R_STAND_SPEED_H
F_LOAD_OUT
F_LOAD_IN
UNLOADING
LOADING
R_STAND_S2L
R_STAND_L2S
CLEANING_OFF
CLEANING_ON
S_BRAKE_OFF_H
S_BRAKE_ON_H
T_BRAKE_OFF_H
T_BRAKE_ON_H
PINCH_ON_H
PINCH_OFF_H
M_STOPPER_OFF_H
M_STOPPER_ON_H
SYS_SV_RESET_H
SERVO_RESET_L
RESERVE_1
SOL_LOW_H
CLE_SOL_ON_H
SOL_ON_H
HIGH_SPEED_H
SPEED_LATCH
OSD_STB1
SOL_SF
SYS_RSW[0-3]
SYS_FLASH_ON_L
TAPE_SENSOR_ON
PAT=PATTERN ONLY
Ref No. 400～499 Series.
(IC = Ref No. 1 Series.)
COMPONENT NAME
F2:SYSCON (MAIN)
04/18
CIRCUIT BOARD NO.
DRAWING NO.
VEP86294-1
KR6T89 (4/18)
SCM021

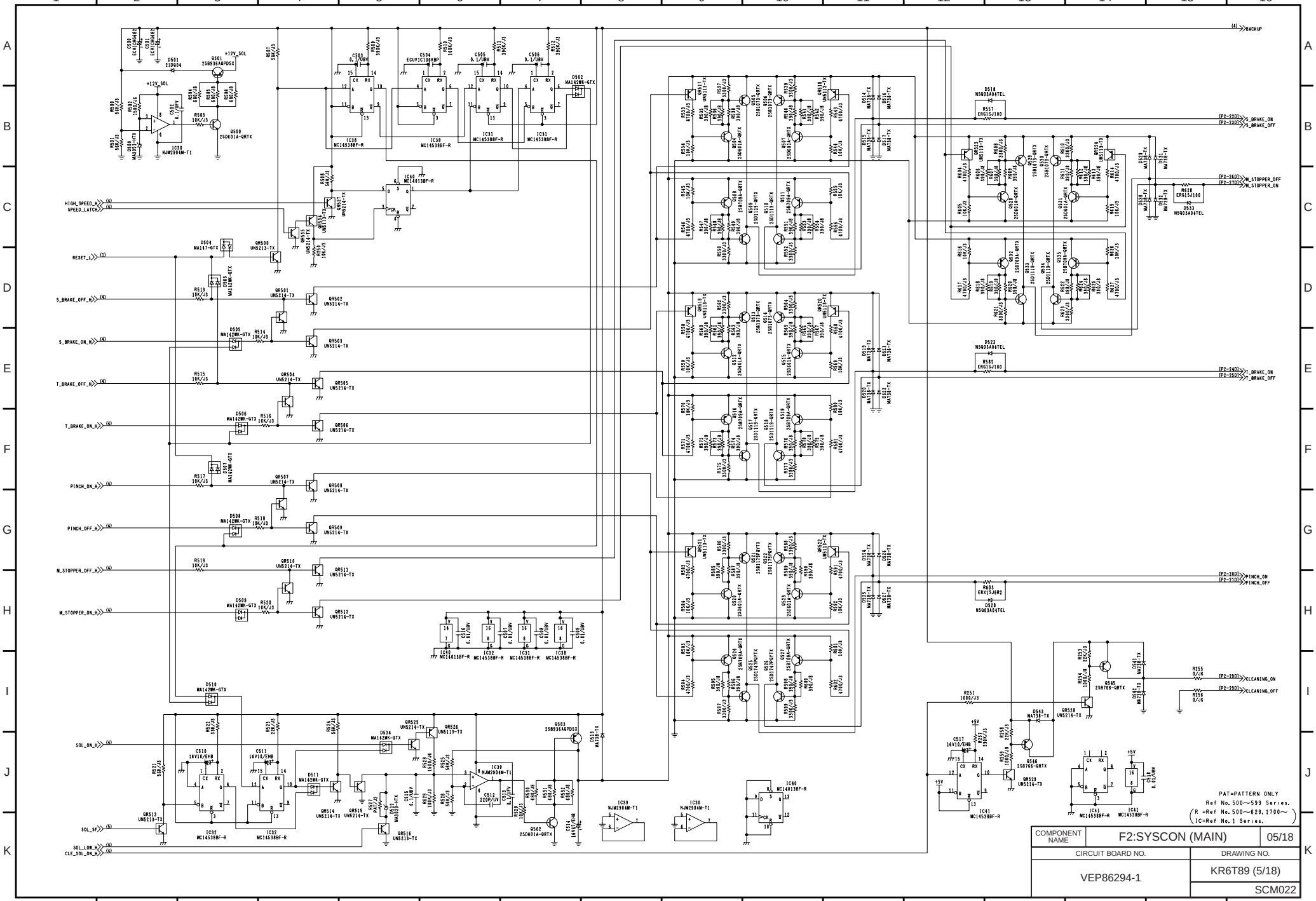
BACKUP
S_BRAKE_ON
S_BRAKE_OFF
M_STOPPER_OFF
M_STOPPER_ON
T_BRAKE_ON
T_BRAKE_OFF
PINCH_ON
PINCH_OFF
CLEANING_ON
CLEANING_OFF
HIGH_SPEED_H
SPEED_LATCH
RESET_L
S_BRAKE_OFF_H
S_BRAKE_ON_H
T_BRAKE_OFF_H
T_BRAKE_ON_H
PINCH_ON_H
PINCH_OFF_H
M_STOPPER_OFF_H
M_STOPPER_ON_H
SOL_ON_H
SOL_SF
SOL_LOW_H
CLE_SOL_ON_H
+12V_SOL
+5V
PAT=PATTERN ONLY
Ref No. 500～599 Series.
(R =Ref No. 500～629, 1700～
IC=Ref No. 1 Series.)
COMPONENT NAME
F2:SYSCON (MAIN)
05/18
CIRCUIT BOARD NO.
DRAWING NO.
VEP86294-1
KR6T89 (5/18)
SCM022

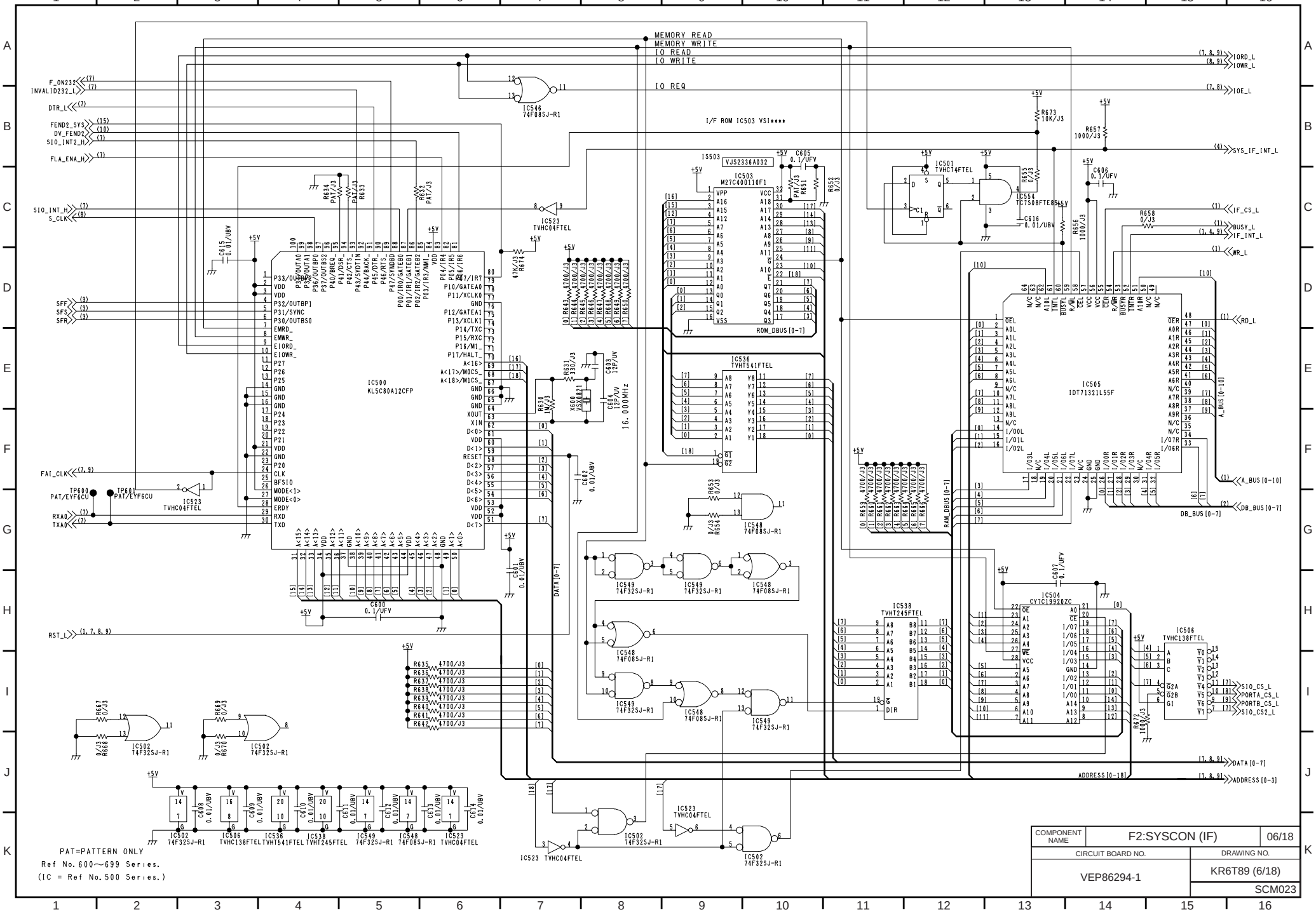

COMPONENT NAME	F2:SYSCON (IF)	06/18
CIRCUIT BOARD NO.		DRAWING NO.
VEP86294-1		KR6T89 (6/18)
		SCM023

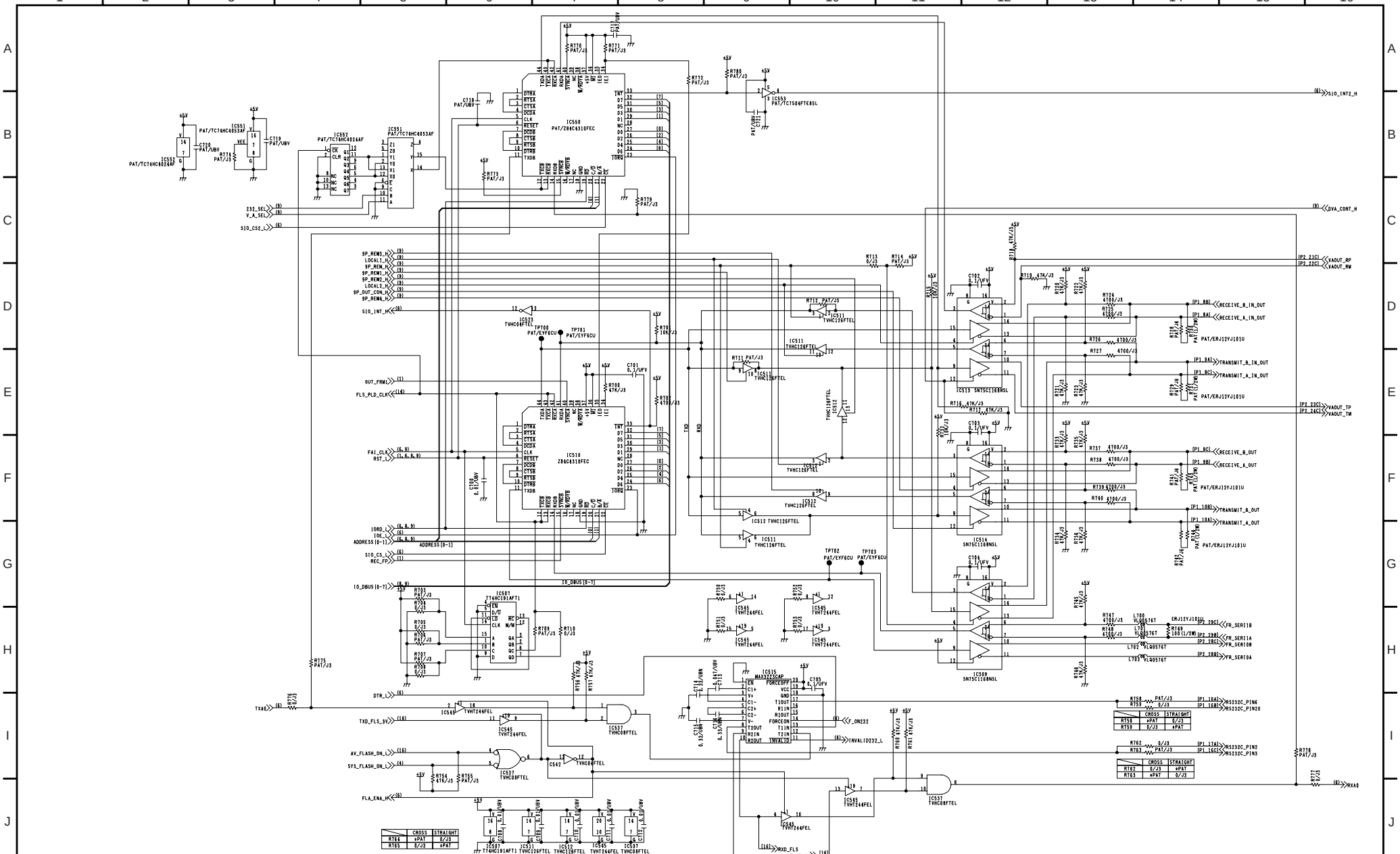

PAT=PATTERN ONLY

Ref No. 700~799 Series.
(IC = Ref No. 500 Series.)

COMPONENT NAME	F2:SYSCON (IF)	07/18
CIRCUIT BOARD NO.		DRAWING NO.
VEP86294-1		KR6T89 (7/18)
		SCM024

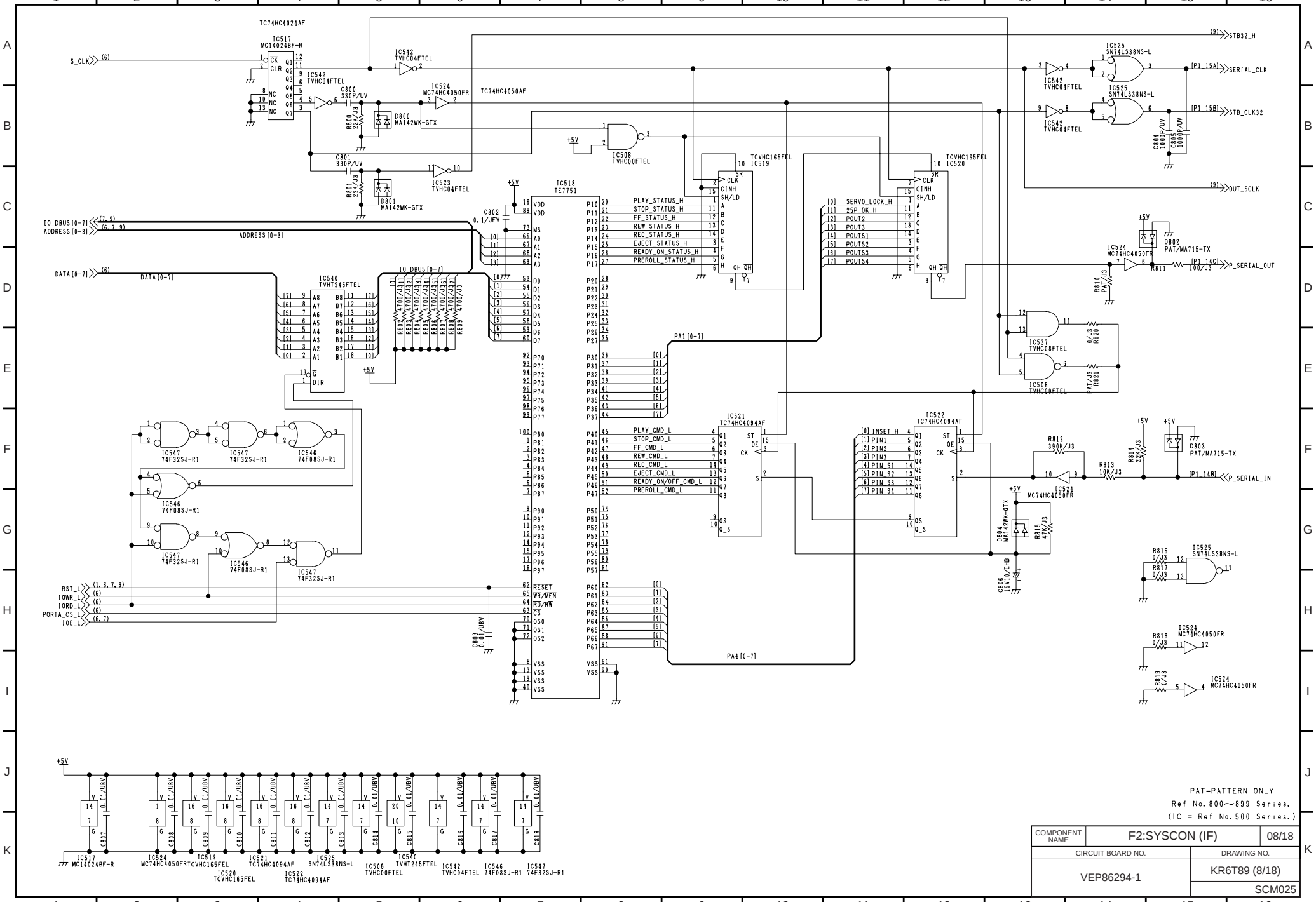
IC517 MC14024BF-R
TC74HC4024AF
IC542 TVHC04FTEL
IC524 MC74HC4050FR
TC74HC4050AF
IC508 TVHC00FTEL
IC523 TVHC04FTEL
IC525 SN74LS38NS-L
IC518 TE7751
IC519 TCVHC165FEL
IC520 TCVHC165FEL
IC540 TVHT245FTEL
IC521 TC74HC4094AF
IC522 TC74HC4094AF
IC531 TVHC08FTEL
IC547 74F325J-R1
IC546 74F085J-R1
S_CLK
STB32_H
SERIAL_CLK
STB_CLK32
OUT_SCLK
P_SERIAL_OUT
P_SERIAL_IN
IO_DBUS[0-7]
ADDRESS[0-3]
DATA[0-7]
PLAY_STATUS_H
STOP_STATUS_H
FF_STATUS_H
REW_STATUS_H
REC_STATUS_H
EJECT_STATUS_H
READY_ON_STATUS_H
PREROLL_STATUS_H
SERVO_LOCK_H
25P_OK_H
POUT2
POUT3
POUTS1
POUTS2
POUTS3
POUTS4
PLAY_CMD_L
STOP_CMD_L
FF_CMD_L
REW_CMD_L
REC_CMD_L
EJECT_CMD_L
READY_ON/OFF_CMD_L
PREROLL_CMD_L
INSET_H
PIN1
PIN2
PIN3
PIN_S1
PIN_S2
PIN_S3
PIN_S4
PA1[0-7]
PA4[0-7]
RESET
WR/MEN
RD/RW
CS
RST_L
IOWR_L
IORD_L
PORTA_CS_L
IOE_L
PAT=PATTERN ONLY
Ref No. 800～899 Series.
(IC = Ref No. 500 Series.)
COMPONENT NAME
F2:SYSCON (IF)
08/18
CIRCUIT BOARD NO.
VEP86294-1
DRAWING NO.
KR6T89 (8/18)
SCM025

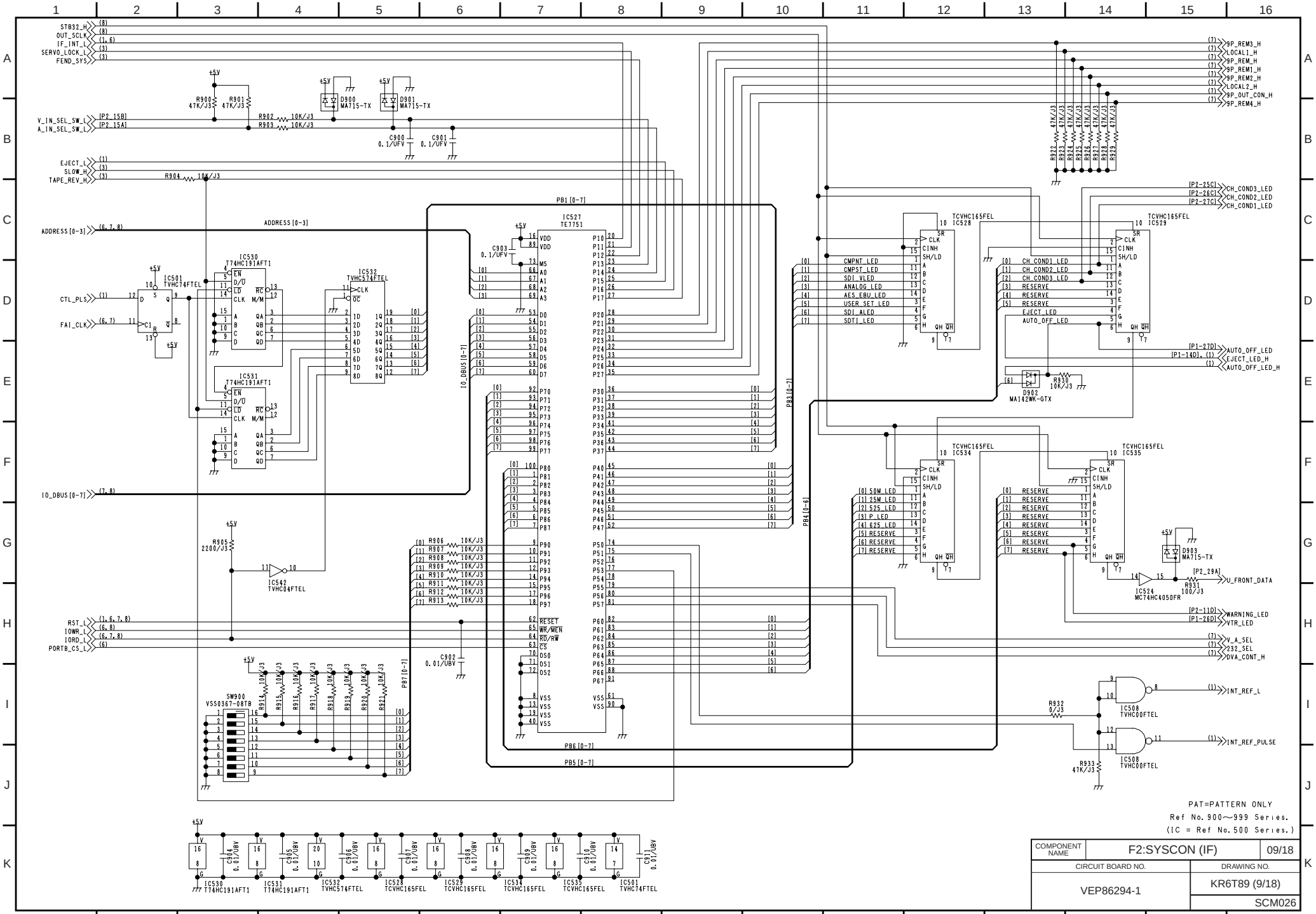
STB32_H
OUT_SCLK
IF_INT_L
SERVO_LOCK_L
FEND_SYS
V_IN_SEL_SW_L
A_IN_SEL_SW_L
EJECT_L
SLOW_H
TAPE_REV_H
ADDRESS[0-3]
CTL_PLS
FAI_CLK
IO_DBUS[0-7]
RST_L
IOWR_L
IORD_L
PORTB_CS_L
IC527 TE7751
IC530 T74HC191AFT1
IC531 T74HC191AFT1
IC532 TVHC574FTEL
IC501 TVHC74FTEL
IC542 TVHC04FTEL
SW900 VSS0367-08TB
D900 MA715-TX
D901 MA715-TX
D902 MA142WK-GTX
D903 MA715-TX
IC528 TCVHC165FEL
IC529 TCVHC165FEL
IC534 TCVHC165FEL
IC535 TCVHC165FEL
IC524 MC74HC4050FR
IC508 TVHC00FTEL
9P_REM3_H
LOCAL1_H
9P_REM_H
9P_REM1_H
9P_REM2_H
LOCAL2_H
9P_OUT_CON_H
9P_REM4_H
CH_COND3_LED
CH_COND2_LED
CH_COND1_LED
AUTO_OFF_LED
EJECT_LED_H
AUTO_OFF_LED_H
WARNING_LED
VTR_LED
V_A_SEL
232_SEL
DVA_CONT_H
V_FRONT_DATA
INT_REF_L
INT_REF_PULSE
CMPNT_LED
CMPST_LED
SDI_VLED
ANALOG_LED
AES_EBU_LED
USER_SET_LED
SDI_ALED
SDTI_LED
CH_COND1_LED
CH_COND2_LED
CH_COND3_LED
RESERVE
EJECT_LED
AUTO_OFF_LED
50M_LED
25M_LED
525_LED
P_LED
625_LED
RESERVE
PB1[0-7]
PB3[0-7]
PB4[0-5]
PB6[0-7]
PB5[0-7]
PB7[0-7]
PAT=PATTERN ONLY
Ref No.900～999 Series.
(IC = Ref No.500 Series.)
COMPONENT NAME
F2:SYSCON (IF)
09/18
CIRCUIT BOARD NO.
DRAWING NO.
VEP86294-1
KR6T89 (9/18)
SCM026

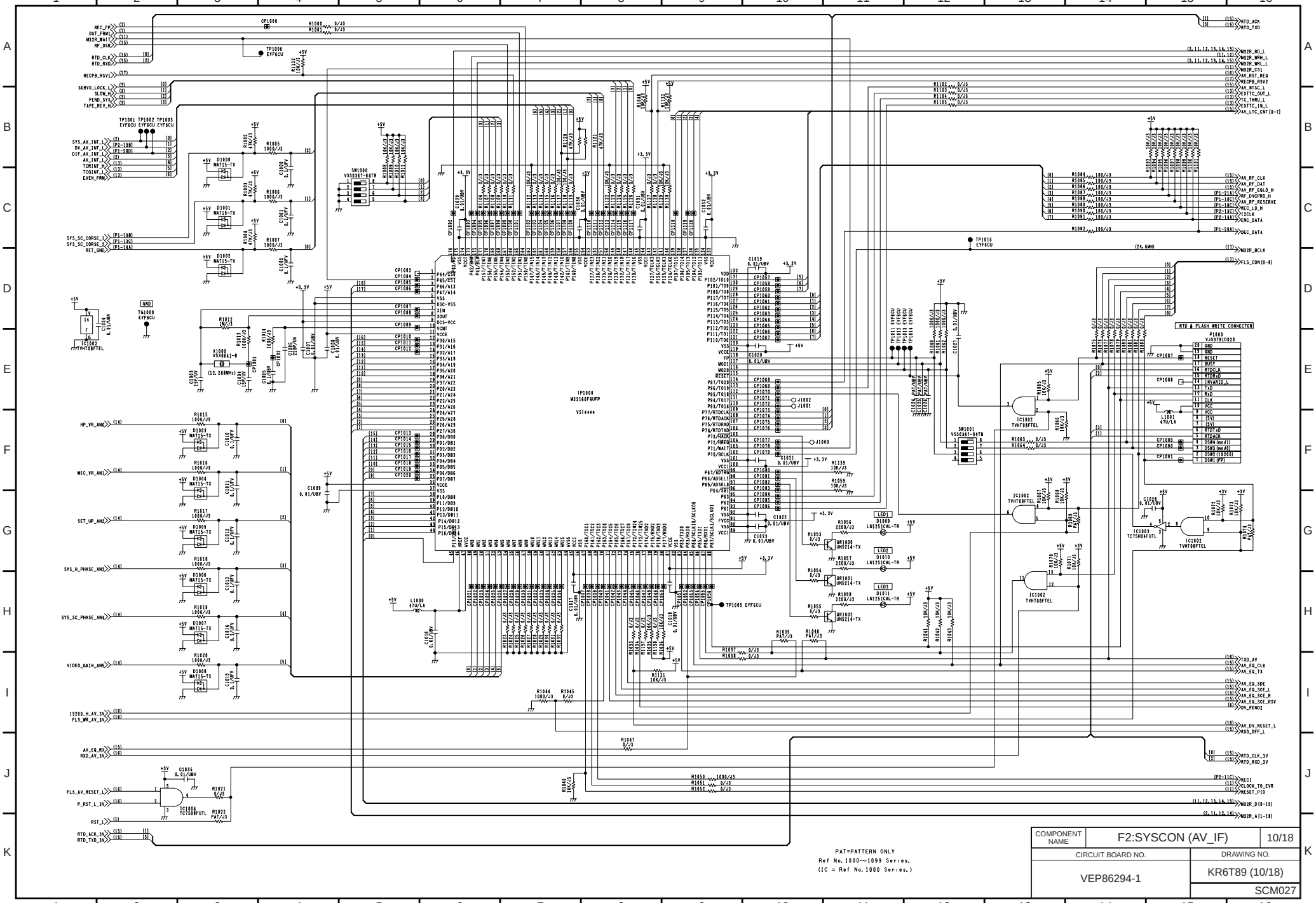

COMPONENT NAME	F2:SYSCON (AV_IF)	10/18
CIRCUIT BOARD NO.		DRAWING NO.
VEP86294-1		KR6T89 (10/18)
		SCM027

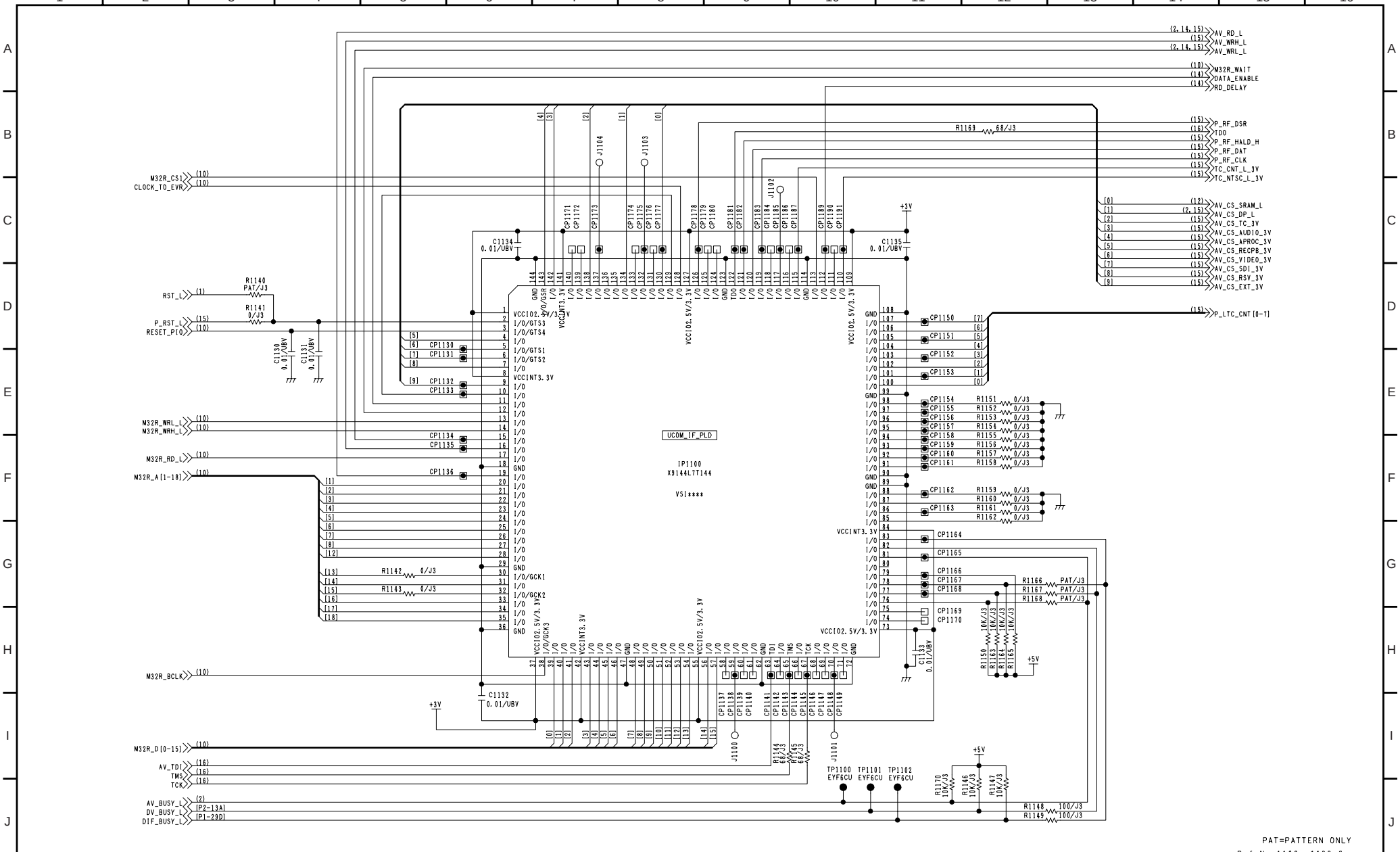

PAT=PATTERN ONLY
Ref No.1100～1199 Series.
(IC = Ref No.1000 Series.)

COMPONENT NAME	F2:SYSCON (AV_IF)	11/18
CIRCUIT BOARD NO.	DRAWING NO.	
VEP86294-1	KR6T89 (11/18)	
	SCM028	

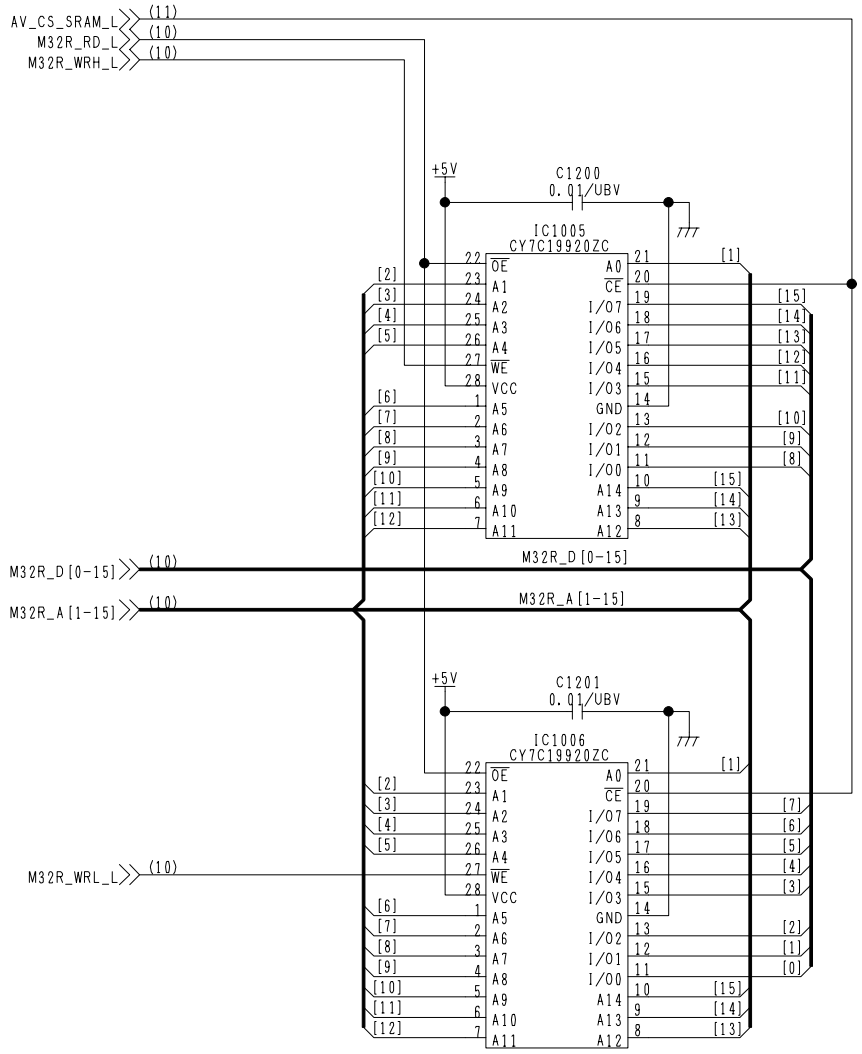

PAT=PATTERN ONLY
Ref No.1200～1299 Series.
(IC = Ref No.1000 Series.)

COMPONENT NAME	F2:SYSCON (AV_IF)	12/18
CIRCUIT BOARD NO.	DRAWING NO.	
VEP86294-1	KR6T89 (12/18)	
	SCM029	

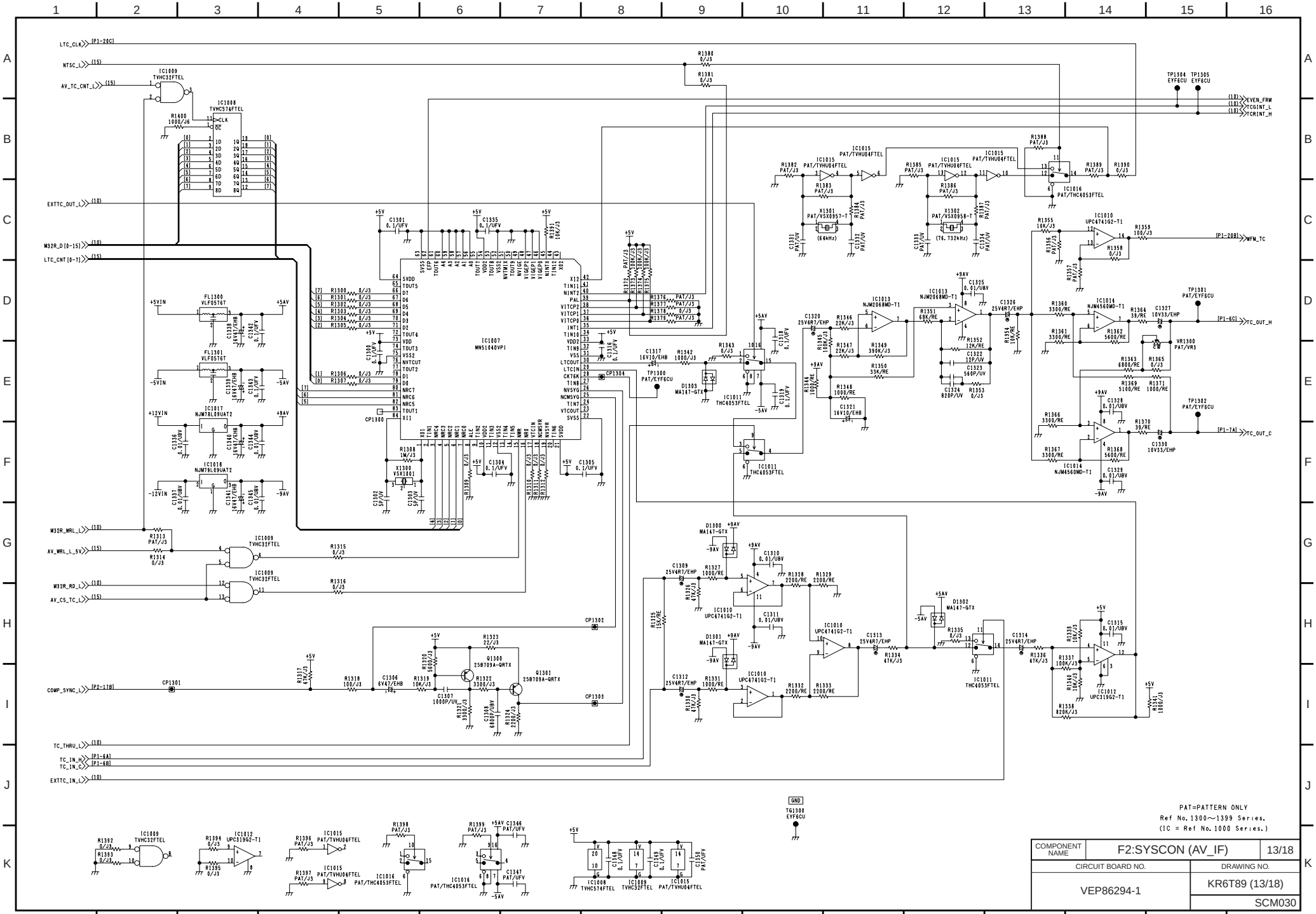

COMPONENT NAME	F2:SYSCON (AV_IF)	13/18
CIRCUIT BOARD NO.	DRAWING NO.	
VEP86294-1	KR6T89 (13/18)	
	SCM030	

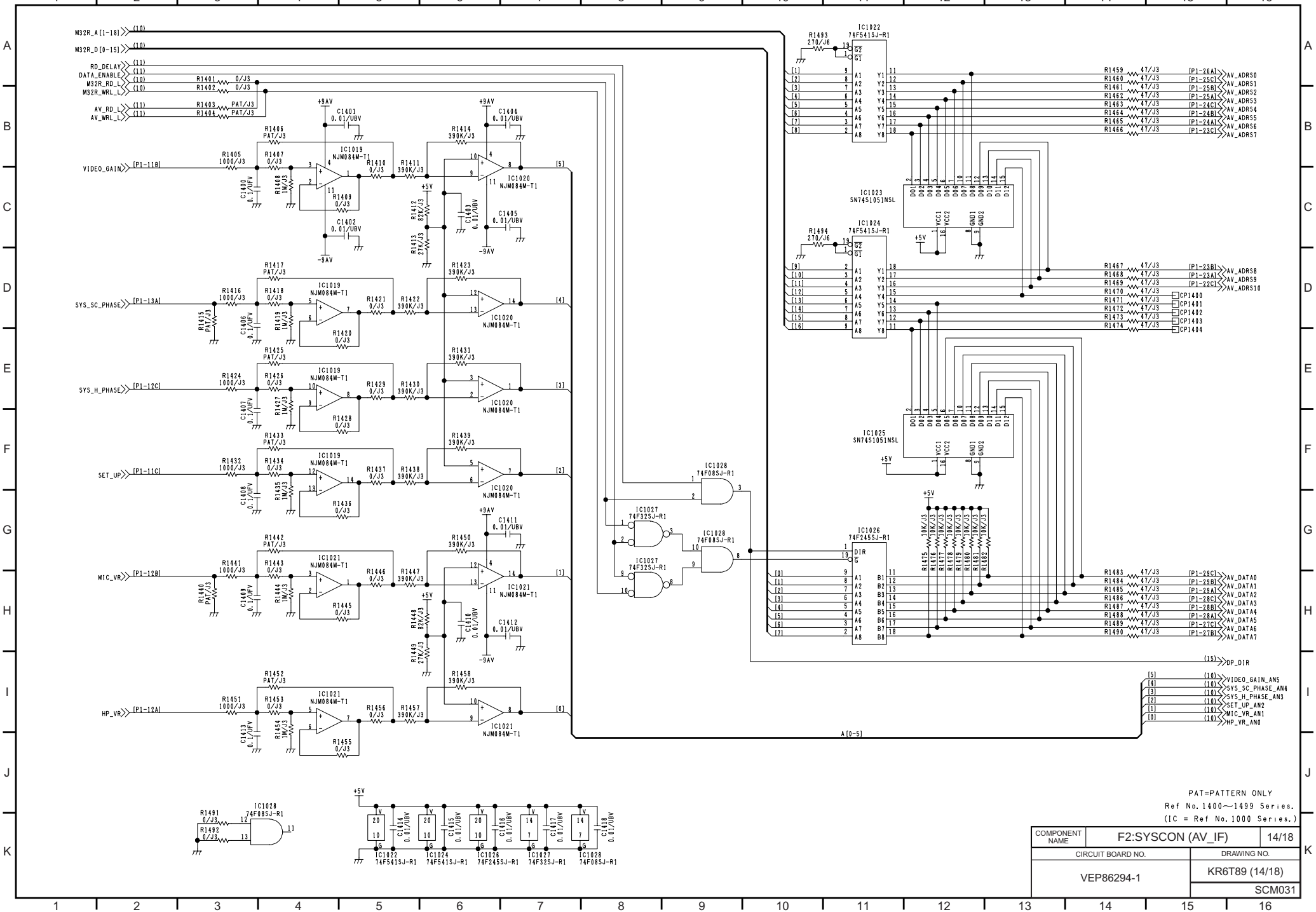
M32R_A[1-18]
M32R_D[0-15]
RD_DELAY
DATA_ENABLE
M32R_RD_L
M32R_WRL_L
AV_RD_L
AV_WRL_L
VIDEO_GAIN
SYS_SC_PHASE
SYS_H_PHASE
SET_UP
MIC_VR
HP_VR
IC1019 NJM084M-T1
IC1020 NJM084M-T1
IC1021 NJM084M-T1
IC1022 74F541SJ-R1
IC1023 SN74S1051NSL
IC1024 74F541SJ-R1
IC1025 SN74S1051NSL
IC1026 74F245SJ-R1
IC1027 74F325J-R1
IC1028 74F08SJ-R1
AV_ADRS0
AV_ADRS1
AV_ADRS2
AV_ADRS3
AV_ADRS4
AV_ADRS5
AV_ADRS6
AV_ADRS7
AV_ADRS8
AV_ADRS9
AV_ADRS10
CP1400
CP1401
CP1402
CP1403
CP1404
AV_DATA0
AV_DATA1
AV_DATA2
AV_DATA3
AV_DATA4
AV_DATA5
AV_DATA6
AV_DATA7
DP_DIR
VIDEO_GAIN_AN5
SYS_SC_PHASE_AN4
SYS_H_PHASE_AN3
SET_UP_AN2
MIC_VR_AN1
HP_VR_AN0
A[0-5]
+9AV
-9AV
+5V
PAT=PATTERN ONLY
Ref No.1400～1499 Series.
(IC = Ref No.1000 Series.)
COMPONENT NAME
F2:SYSCON (AV_IF)
14/18
CIRCUIT BOARD NO.
VEP86294-1
DRAWING NO.
KR6T89 (14/18)
SCM031

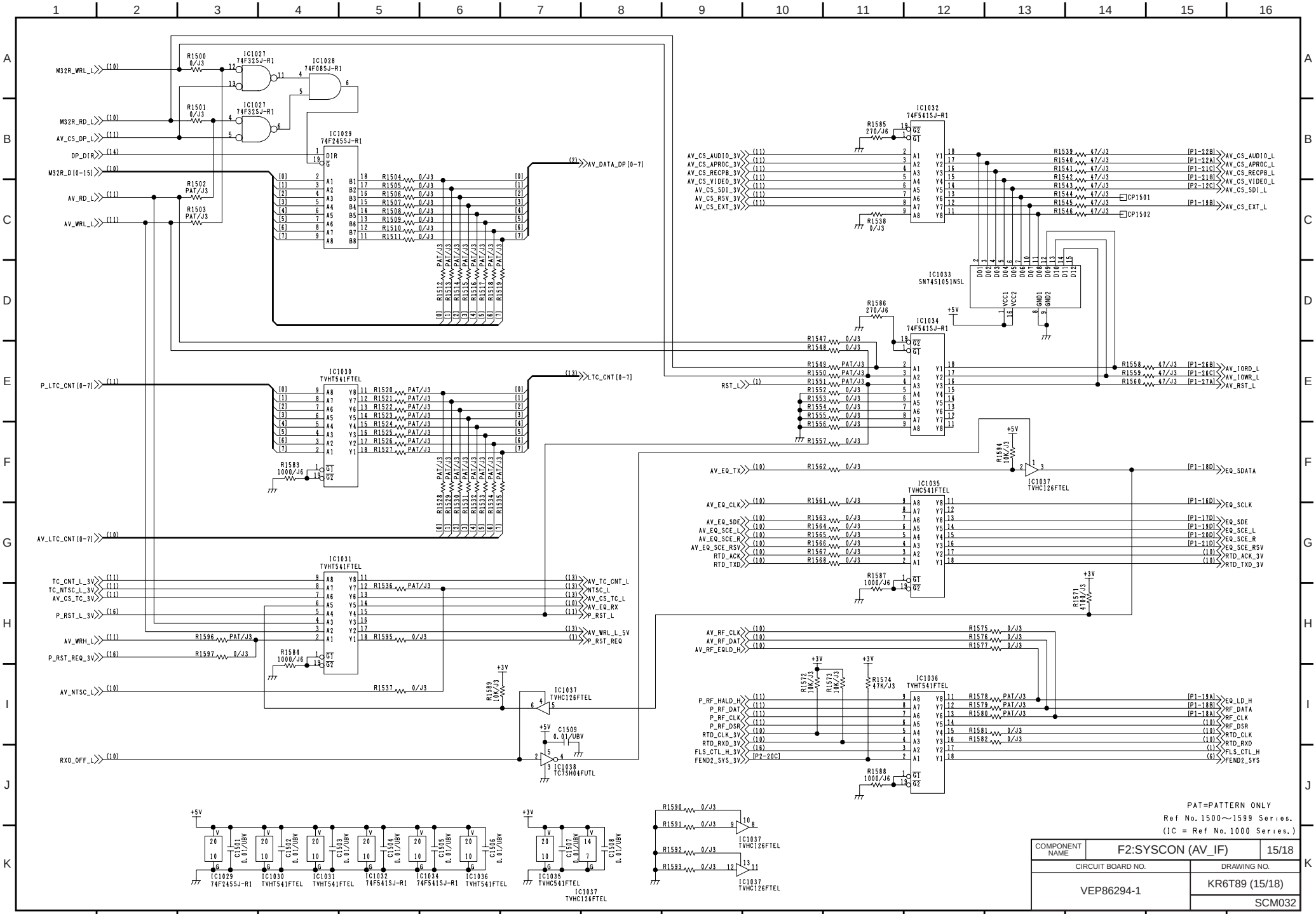
M32R_WRL_L
M32R_RD_L
AV_CS_DP_L
DP_DIR
M32R_D[0-15]
AV_RD_L
AV_WRL_L
R1500 0/J3
R1501 0/J3
R1502 PAT/J3
R1503 PAT/J3
IC1027 74F32SJ-R1
IC1028 74F085J-R1
IC1029 74F245SJ-R1
AV_DATA_DP[0-7]
P_LTC_CNT[0-7]
IC1030 TVHT541FTEL
LTC_CNT[0-7]
R1583 1000/J6
AV_LTC_CNT[0-7]
IC1031 TVHT541FTEL
TC_CNT_L_3V
TC_NTSC_L_3V
AV_CS_TC_3V
P_RST_L_3V
AV_WRH_L
P_RST_REQ_3V
AV_NTSC_L
AV_TC_CNT_L
NTSC_L
AV_CS_TC_L
AV_EQ_RX
P_RST_L
AV_WRL_L_5V
P_RST_REQ
R1584 1000/J6
R1589 10K/J3
IC1037 TVHC126FTEL
C1509 0.01/UBV
IC1038 TC7SH04FUTL
RXO_OFF_L
IC1032 74F541SJ-R1
R1585 270/J6
R1538 0/J3
AV_CS_AUDIO_3V
AV_CS_APROC_3V
AV_CS_RECPB_3V
AV_CS_VIDEO_3V
AV_CS_SDI_3V
AV_CS_RSV_3V
AV_CS_EXT_3V
AV_CS_AUDIO_L
AV_CS_APROC_L
AV_CS_RECPB_L
AV_CS_VIDEO_L
AV_CS_SDI_L
AV_CS_EXT_L
CP1501
CP1502
IC1033 SN74S1051NSL
IC1034 74F541SJ-R1
R1586 270/J6
RST_L
AV_IORD_L
AV_IOWR_L
AV_RST_L
AV_EQ_TX
EQ_SDATA
IC1037 TVHC126FTEL
R1594 10K/J3
IC1035 TVHC541FTEL
AV_EQ_CLK
AV_EQ_SDE
AV_EQ_SCE_L
AV_EQ_SCE_R
AV_EQ_SCE_RSV
RTD_ACK
RTD_TXD
EQ_SCLK
EQ_SDE
EQ_SCE_L
EQ_SCE_R
EQ_SCE_RSV
RTD_ACK_3V
RTD_TXD_3V
R1587 1000/J6
R1571 470/J3
AV_RF_CLK
AV_RF_DAT
AV_RF_EQLD_H
P_RF_HALD_H
P_RF_DAT
P_RF_CLK
P_RF_DSR
RTD_CLK_3V
RTD_RXD_3V
FLS_CTL_H_3V
FEND2_SYS_3V
R1572 10K/J3
R1573 10K/J3
R1574 47K/J3
IC1036 TVHT541FTEL
EQ_LD_H
RF_DATA
RF_CLK
RF_DSR
RTD_CLK
RTD_RXD
FLS_CTL_H
FEND2_SYS
R1588 1000/J6
C1501 0.01/UBV
C1502 0.01/UBV
C1503 0.01/UBV
C1504 0.01/UBV
C1505 0.01/UBV
C1506 0.01/UBV
C1507 0.01/UBV
C1508 0.01/UBV
IC1029 74F245SJ-R1
IC1030 TVHT541FTEL
IC1031 TVHT541FTEL
IC1032 74F541SJ-R1
IC1034 74F541SJ-R1
IC1036 TVHT541FTEL
IC1035 TVHC541FTEL
IC1037 TVHC126FTEL
R1590 0/J3
R1591 0/J3
R1592 0/J3
R1593 0/J3
PAT=PATTERN ONLY
Ref No. 1500～1599 Series.
(IC = Ref No. 1000 Series.)
COMPONENT NAME
F2:SYSCON (AV_IF)
15/18
CIRCUIT BOARD NO.
DRAWING NO.
VEP86294-1
KR6T89 (15/18)
SCM032

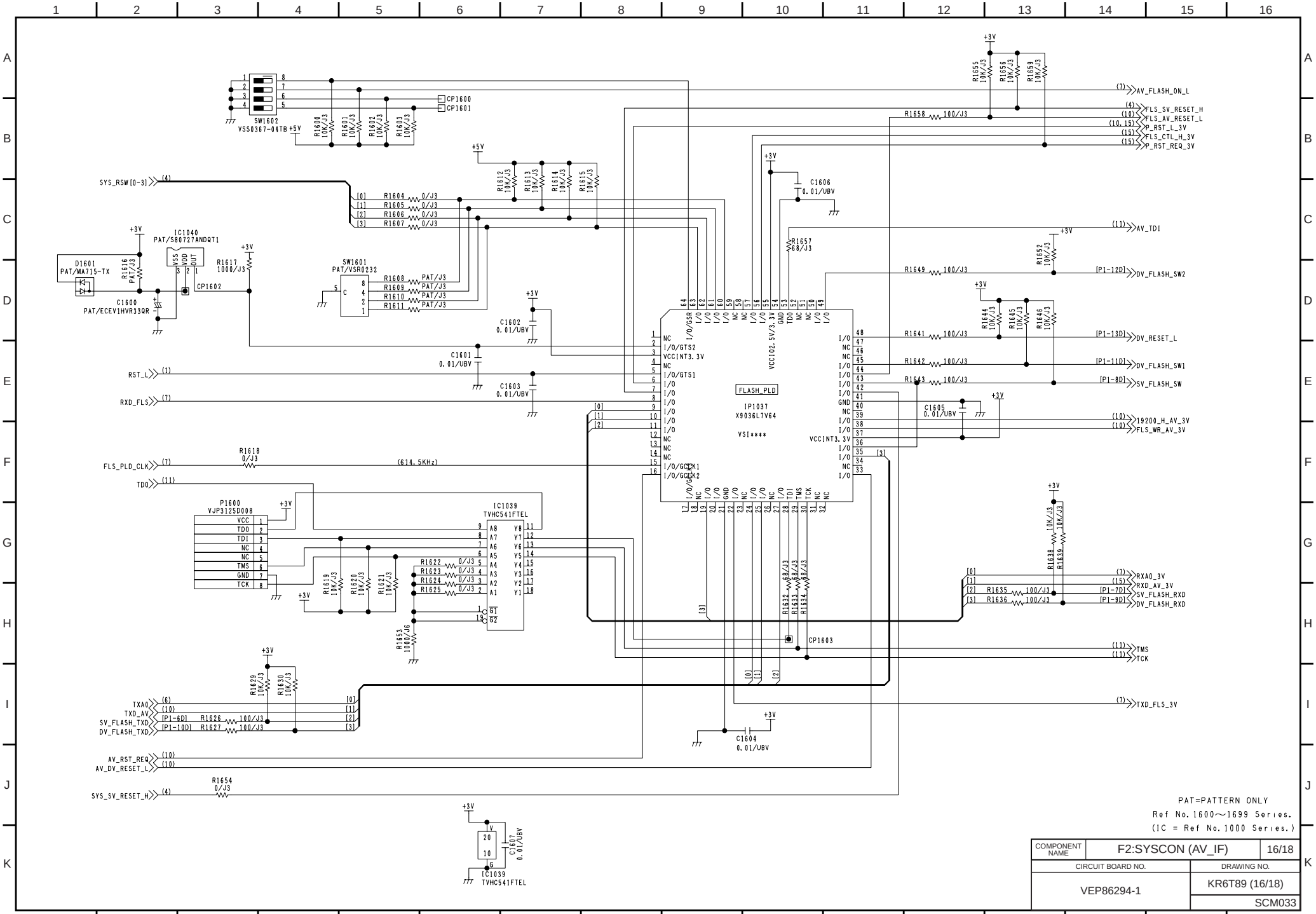

COMPONENT NAME	F2:SYSCON (AV_IF)	16/18
CIRCUIT BOARD NO.		DRAWING NO.
VEP86294-1		KR6T89 (16/18)
		SCM033

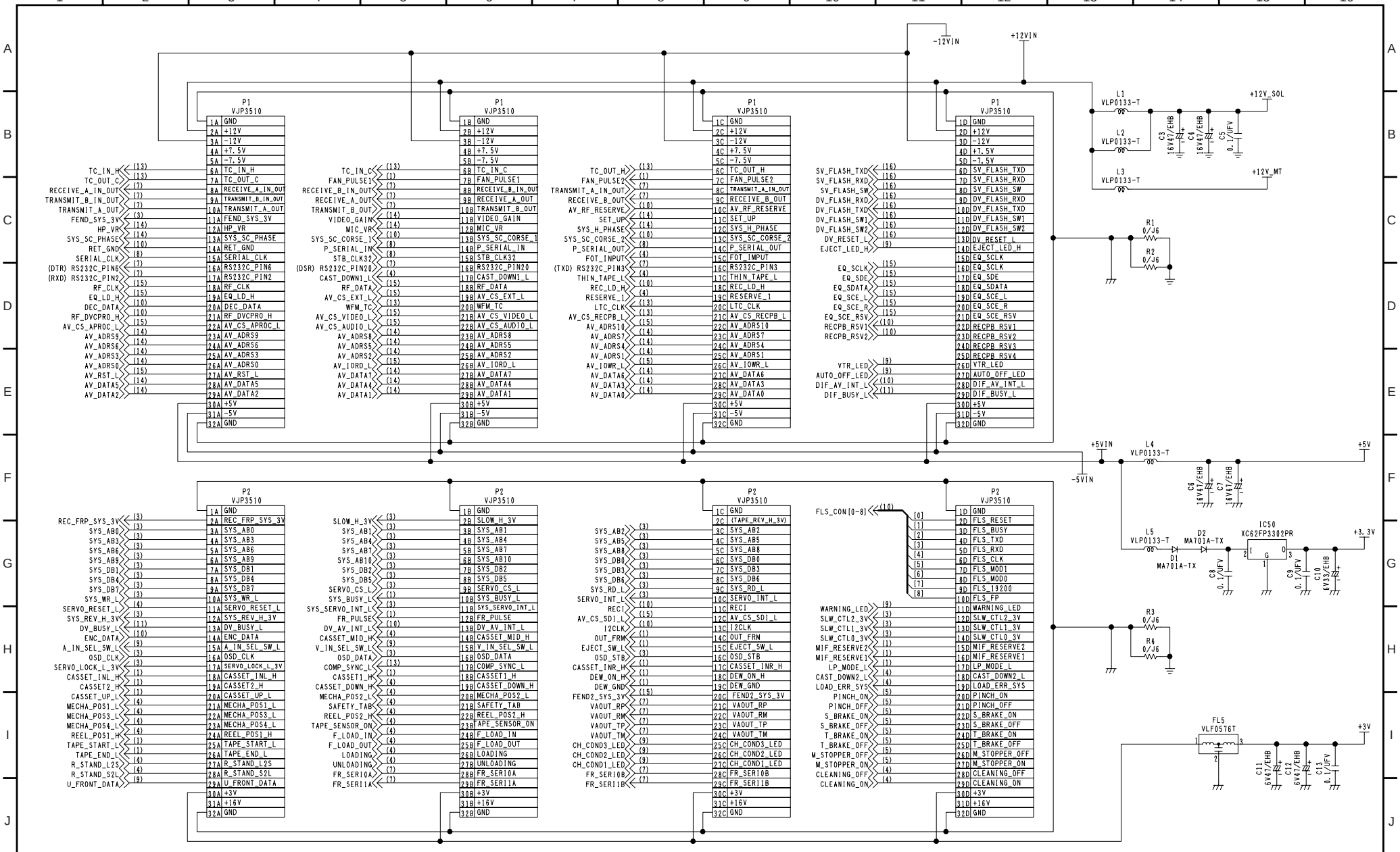

Ref No. 1～99 Series.

COMPONENT NAME	F2:SYSCON (MAIN)	17/18
CIRCUIT BOARD NO.	DRAWING NO.	
VEP86294-1	KR6T89 (17/18)	
	SCM034	

K52-T, P, E						
IC2 (M27C400110F1)	VSI3513					
IC503 (M27C400110F1)	VSI3514					
IP1000 (M32160F4UFP)	VSI3515					
IP1100 (X9144L7T144) IP1037 (X9036L7V64)	VSI3294					

COMPONENT NAME	F2:SYSCON (VSI****)	18/18
CIRCUIT BOARD NO.		DRAWING NO.
VEP86294-1		KR6T89 (18/18)
		SCM035

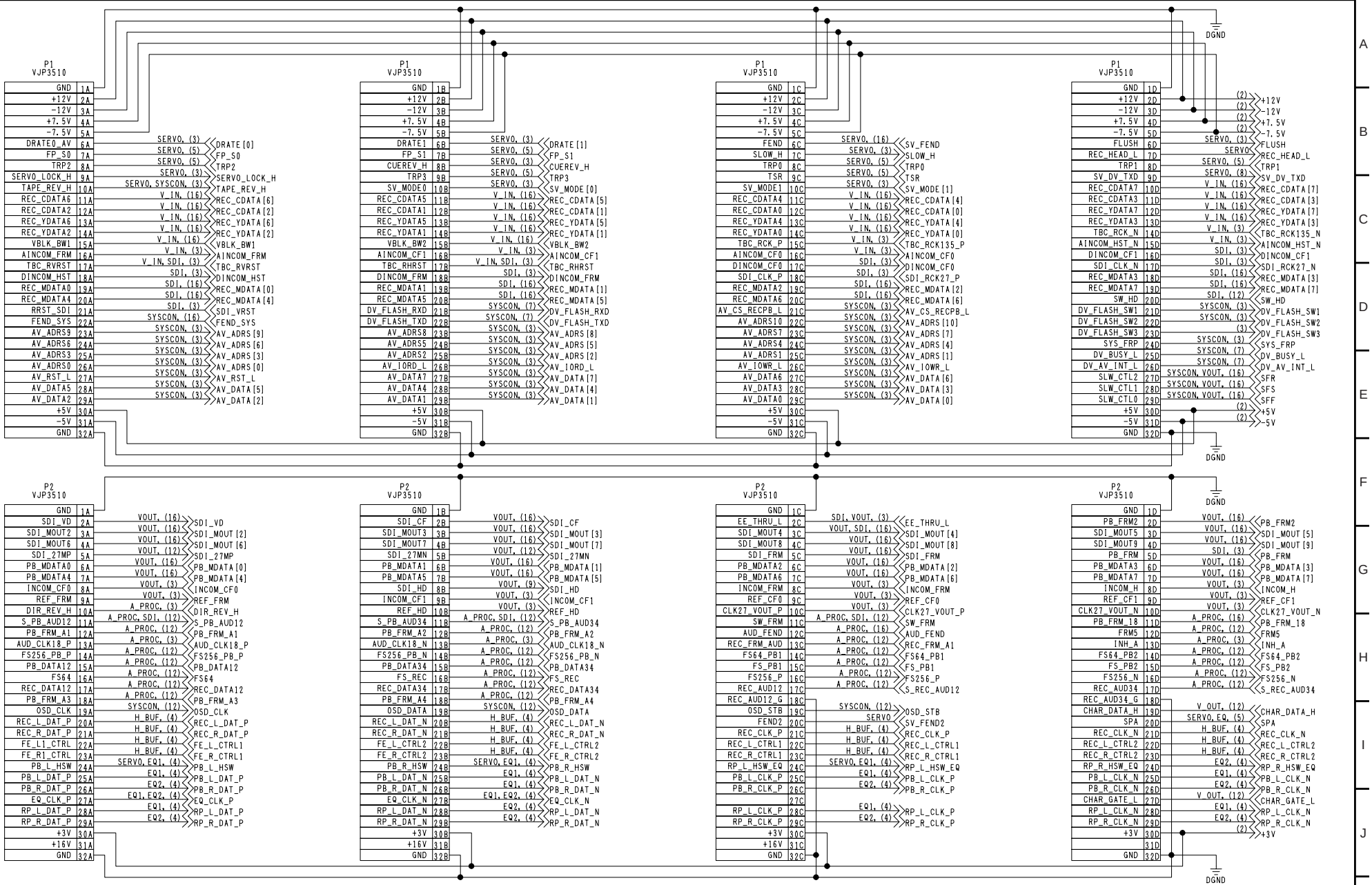

COMPONENT NAME	F4:REC_PB (MOTHER)	01/17
CIRCUIT BOARD NO.	DRAWING NO.	
VEP83534	KR30009 (1/17)	
	SCM036	

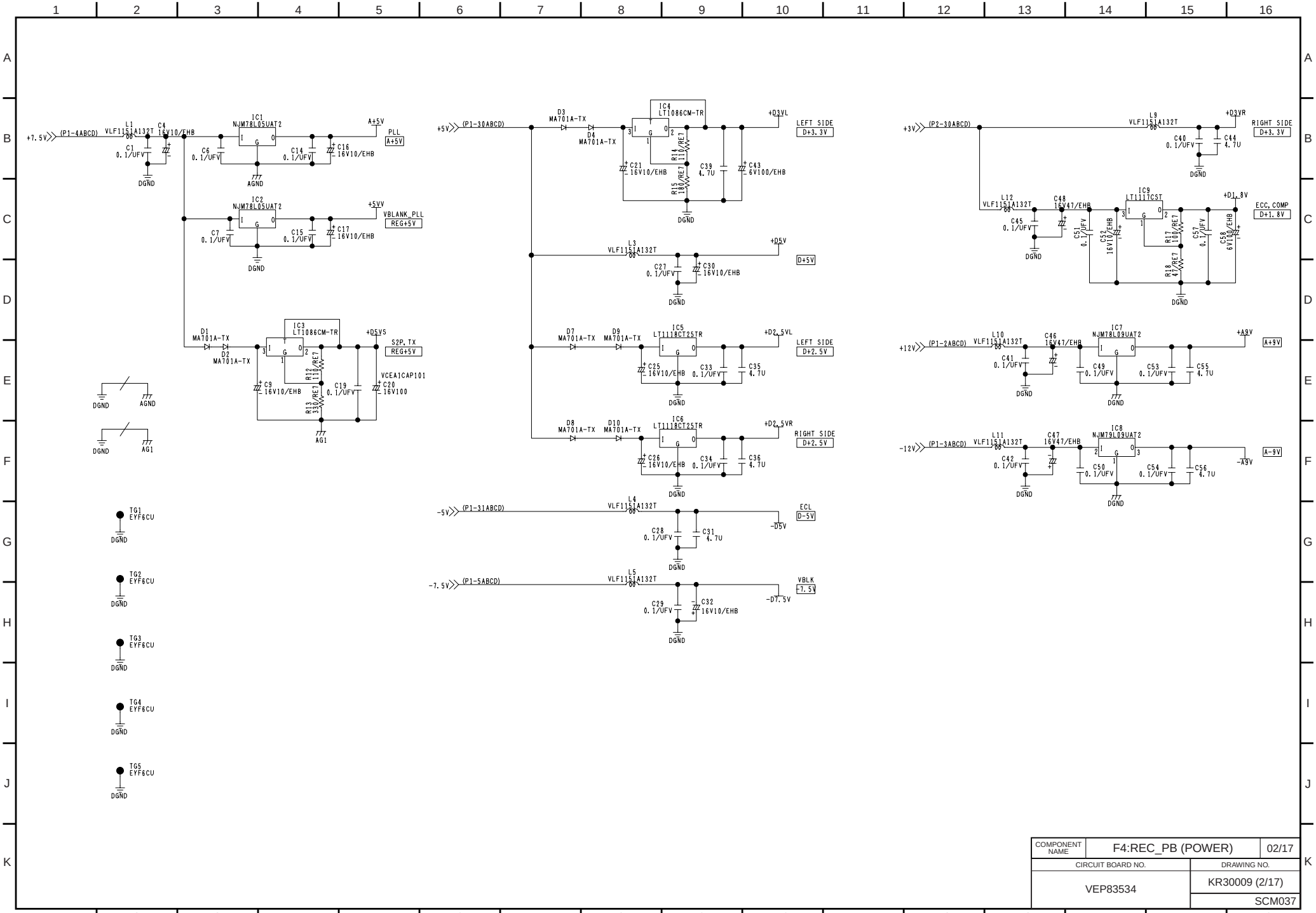

COMPONENT NAME	F4:REC_PB (POWER)	02/17
CIRCUIT BOARD NO.		DRAWING NO.
VEP83534		KR30009 (2/17)
		SCM037

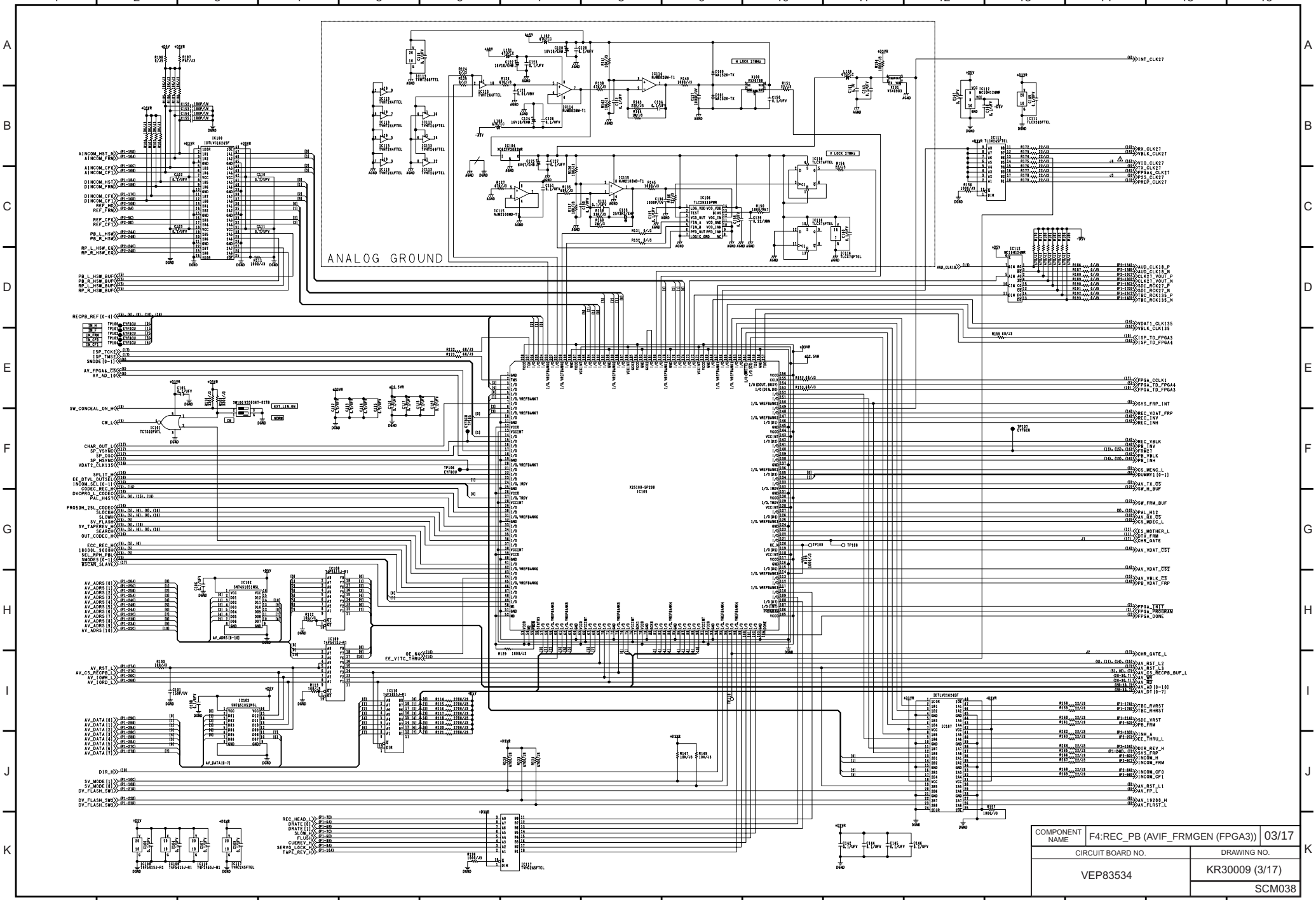
ANALOG GROUND
H LOCK 27MHz
V LOCK 27MHz
AINCOM_HST
AINCOM_FRM
AINCOM_CFO
AINCOM_CFI
DINCOM_HST
DINCOM_FRM
DINCOM_CFO
DINCOM_CFI
REF_HSO
REF_FRM
REF_CFO
REF_CFI
PB_L_HSW
PB_R_HSW
RP_L_HSW_EO
RP_R_HSW_EO
PB_L_HSW_BUF
PB_R_HSW_BUF
RP_L_HSW_BUF
RP_R_HSW_BUF
RECPB_REF[0-4]
ISP_TCK2
ISP_TMS2
SMODE[0-1]
AV_FPGA4_CCK
AV_AD_IRQ
SW_CONCEAL_ON_H
CW_L
CHAR_OUT_L
SP_VSYNC
SP_OSC
SP_HSYNC
VDAT2_CLK135
SPLIT_H
EE_DTVL_OUTSEL
INCOM_SEL[0-1]
CODEC_REC_H
DVCPRO_L_CODEC
PAL_H457
PROSUH_2SL_CODEC
SLCOMM
SLOWM
SV_FLASH
SV_TAPEREV_H
SEARCH
OUT_CODEC_H
ECC_REC_H
1800L_900PAL
SEL_RPH_PBC
SMODE[0-1]
BSCAN_SLAVE
AV_ADRS[0-10]
AV_RST
AV_CS_RECPB_L
AV_IOWR_L
AV_IORD_L
AV_DATA[0-7]
DIR_
SV_MODE[1]
SV_MODE[0]
DV_FLASH_SW1
DV_FLASH_SW2
REC_HEAD
DRATE[0]
DRATE[1]
SLOW_H
FLUSH
CUEREV_H
SERVO_LOCK_H
TAPE_REV_
OE_N4
EE_VITC_THRU
INT_CLK27
RX_CLK27
VBLK_CLK27
VIO_CLK27
VT2_CLK27
FPGA4_CLK27
PB2_CLK27
PREF_CLK27
AUD_CLK18
AUD_CLK18_P
AUD_CLK18_N
CLK27_VOUT_P
CLK27_VOUT_N
SDI_RCK27_P
SDI_RCK27_N
TBC_RCK135_P
TBC_RCK135_N
VDAT1_CLK135
VBLK_CLK135
ISP_TD_FPGA3
ISP_TD_FPGA4
FPGA_CCLK1
FPGA_TD_FPGA4
FPGA_TD_FPGA3
SYS_FRP_INT
REC_VDAT_FRP
REC_INV
REC_INH
REC_VBLK
PB_INV
PB_FRM27
PB_VBLK
PB_INH
CS_MENC_L
DUMMY1[0-1]
AV_TX_CS
SW_H_BUF
SW_FRM_BUF
PAL_H12
AV_RX_CS
CS_MDEC_L
CS_MOTHER_L
DTV_FRM
CHR_GATE
AV_VDAT_CS1
AV_VDAT_CS2
AV_VBLK_CS
PB_VDAT_FRP
FPGA_INIT
FPGA_PROGRAM
FPGA_DONE
CHR_GATE_L
AV_RST_L2
AV_RST_L3
AV_CS_RECPB_BUF_L
AV_WR
AV_RD
AV_AD[0-10]
AV_DT[0-7]
TBC_RVRST
TBC_RHRST
SDI_VRST
PB_FRM
INM_A
EE_THRU_L
DIR_REV_H
SYS_FRP
INCOM_H
INCOM_FRM
INCOM_CFO
INCOM_CFI
AV_RST_L1
AV_FP_L
AV_18200_H
AV_FLRST_L
COMPONENT NAME
F4:REC_PB (AVIF_FRMGEN (FPGA3))
03/17
CIRCUIT BOARD NO.
VEP83534
DRAWING NO.
KR30009 (3/17)
SCM038

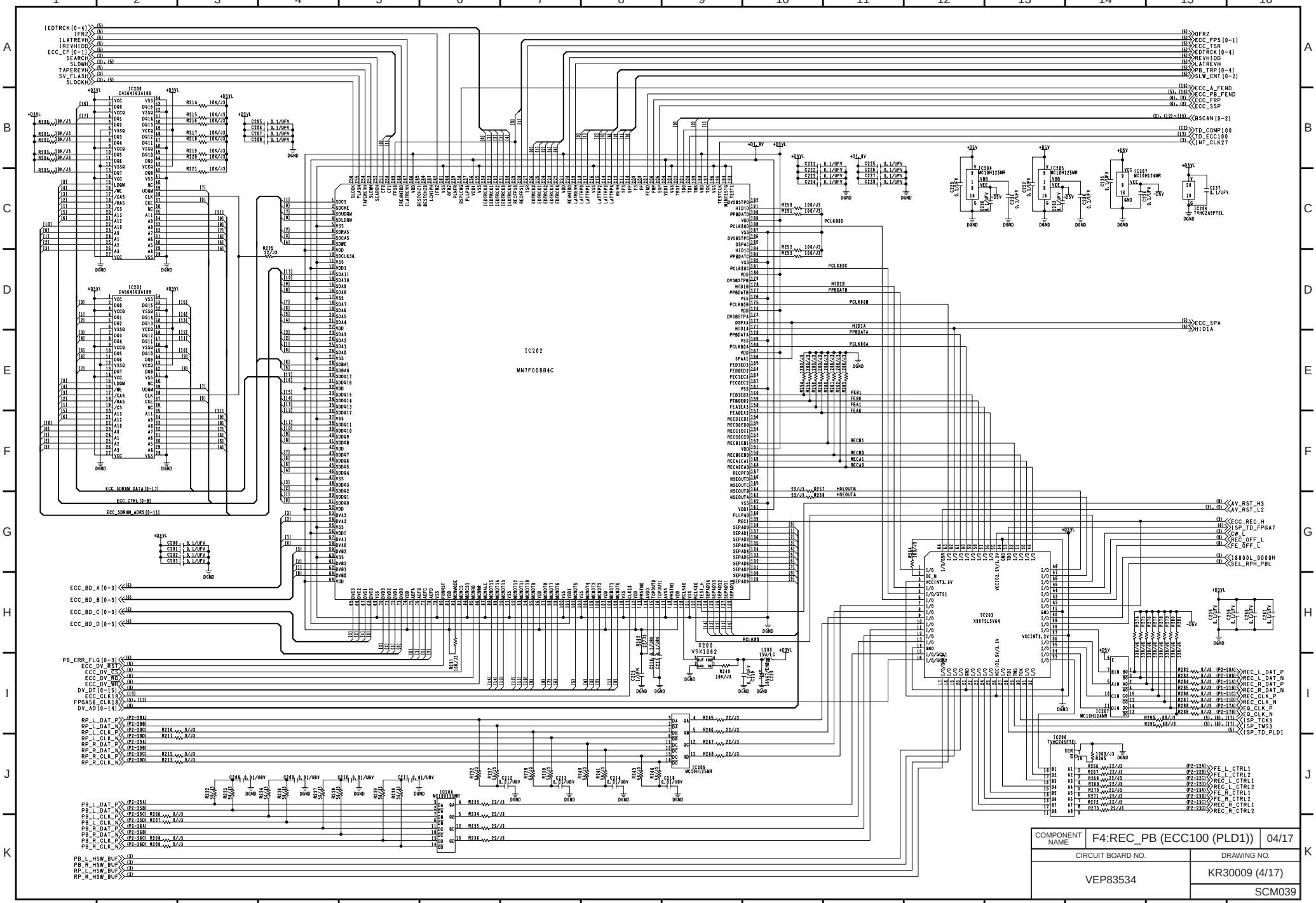

COMPONENT NAME	F4:REC_PB (ECC100 (PLD1))	04/17
CIRCUIT BOARD NO.		DRAWING NO.
VEP83534		KR30009 (4/17)
		SCM039

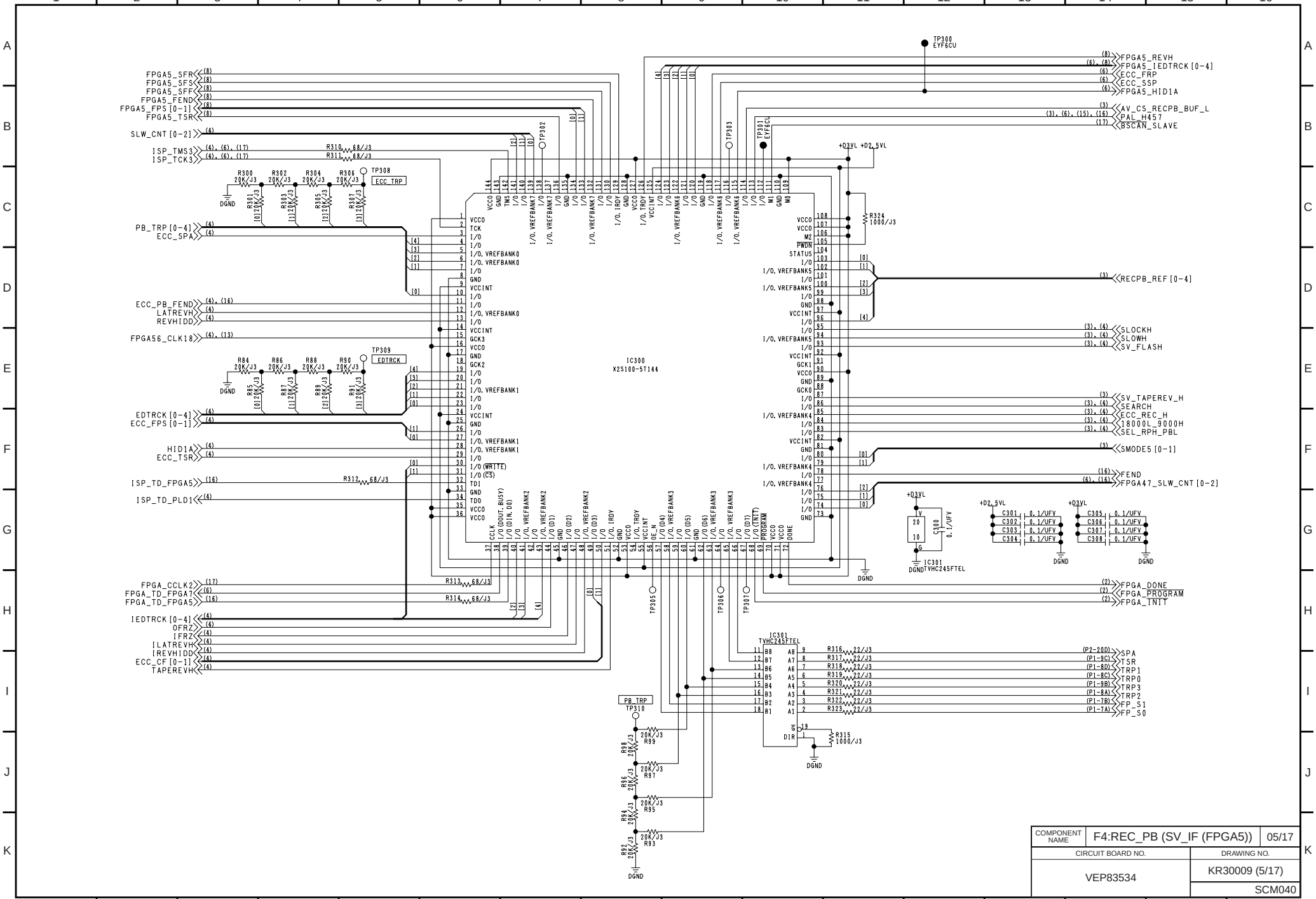

COMPONENT NAME	F4:REC_PB (SV_IF (FPGA5))	05/17
CIRCUIT BOARD NO.		DRAWING NO.
VEP83534		KR30009 (5/17)
		SCM040

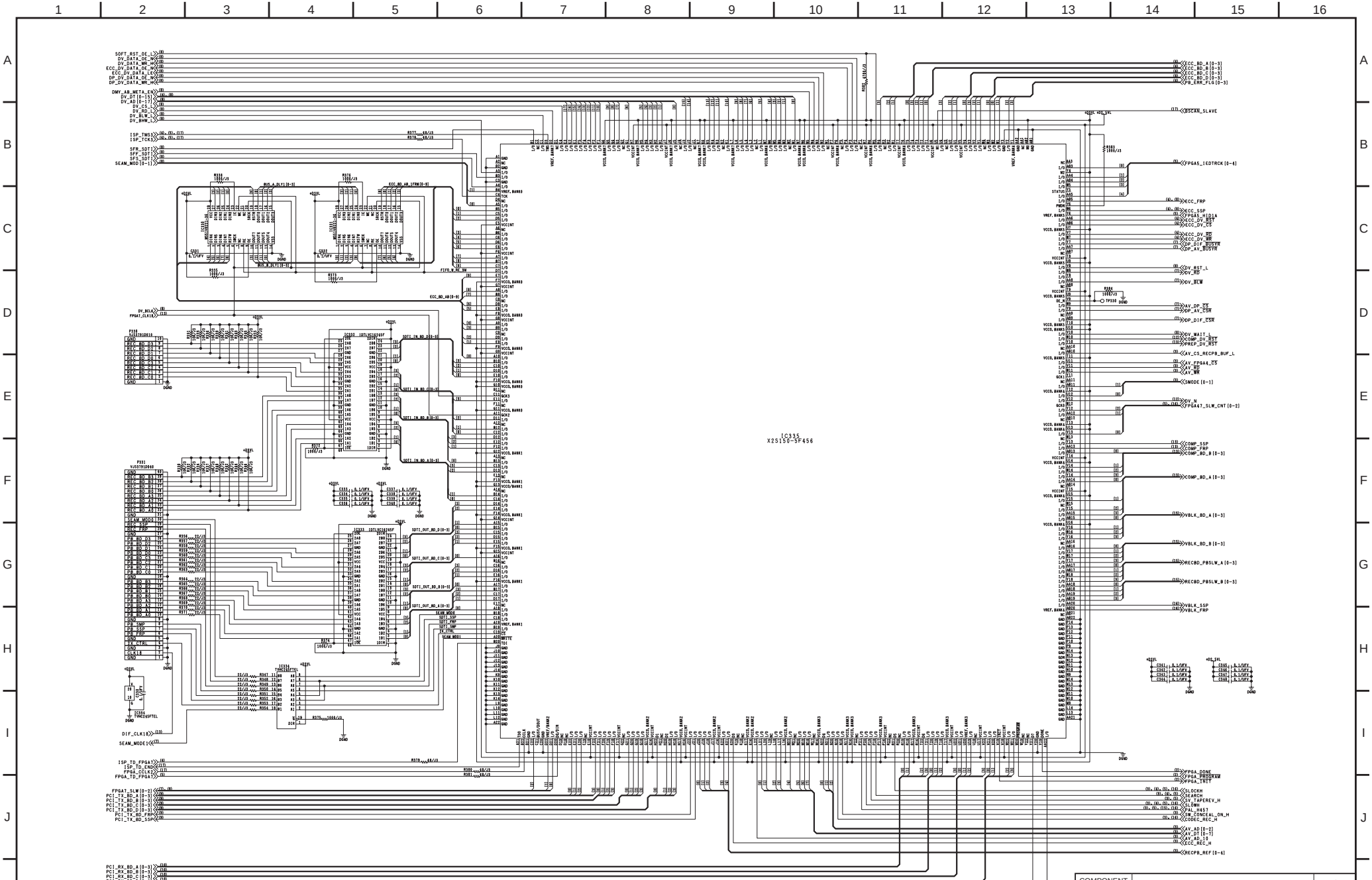

COMPONENT NAME	F4:REC_PB (2ND_BUS_SEL(FPGA7))	06/17
CIRCUIT BOARD NO.	DRAWING NO.	
VEP83534	KR30009 (6/17)	
	SCM041	

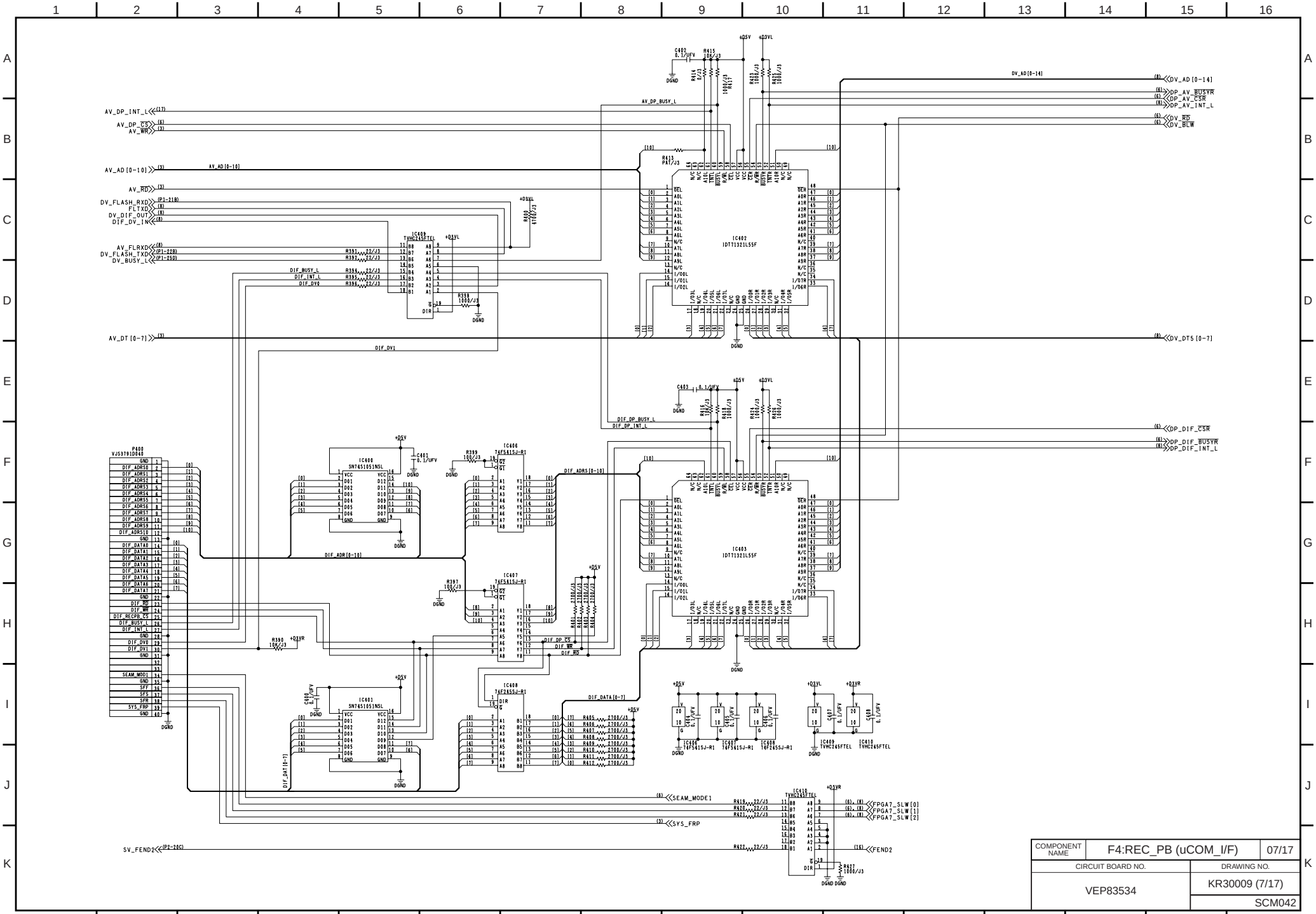

COMPONENT NAME	F4:REC_PB (uCOM_I/F)	07/17
CIRCUIT BOARD NO.		DRAWING NO.
VEP83534		KR30009 (7/17)
		SCM042

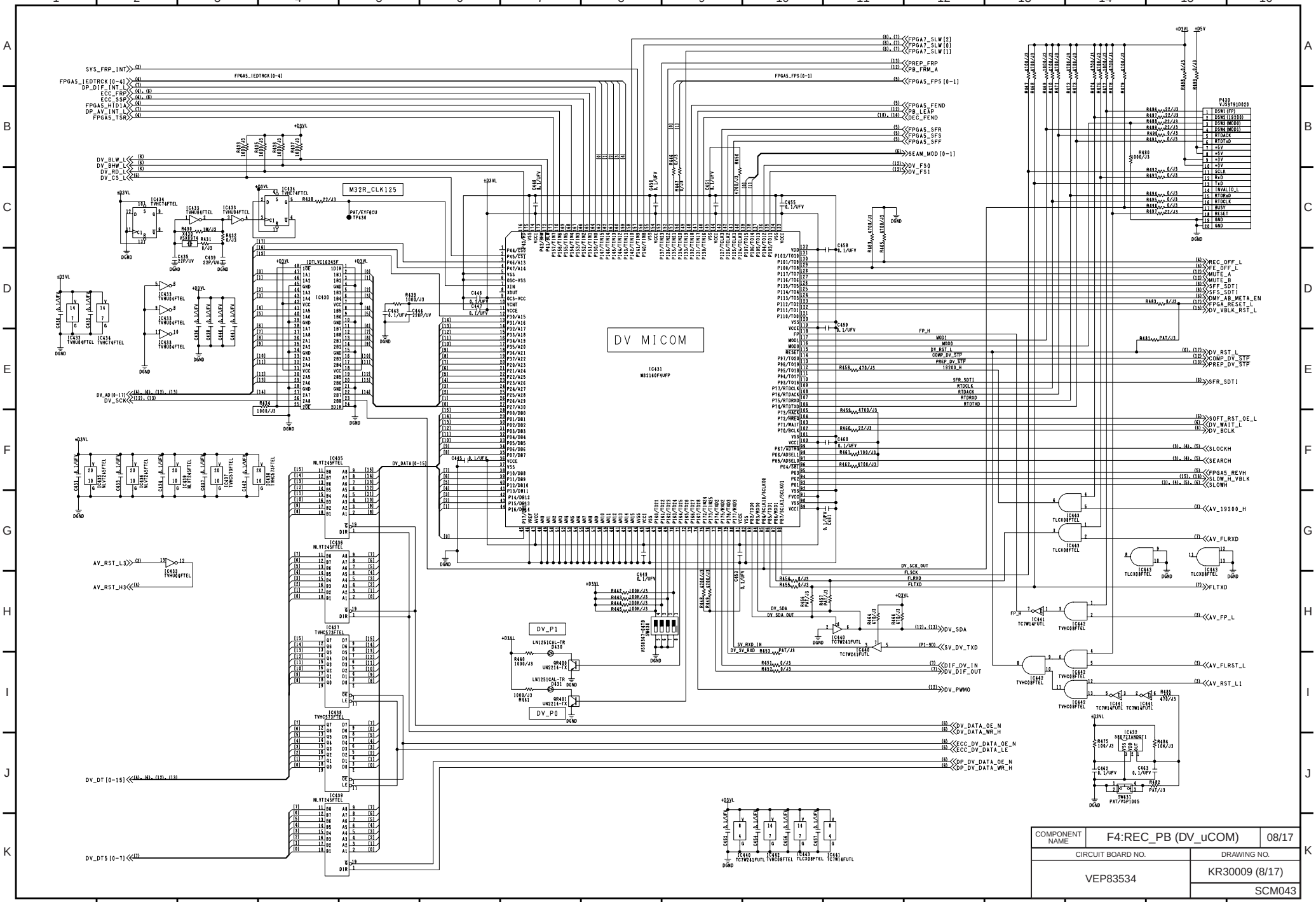

COMPONENT NAME	F4:REC_PB (DV_uCOM)	08/17
CIRCUIT BOARD NO.		DRAWING NO.
VEP83534		KR30009 (8/17)
		SCM043

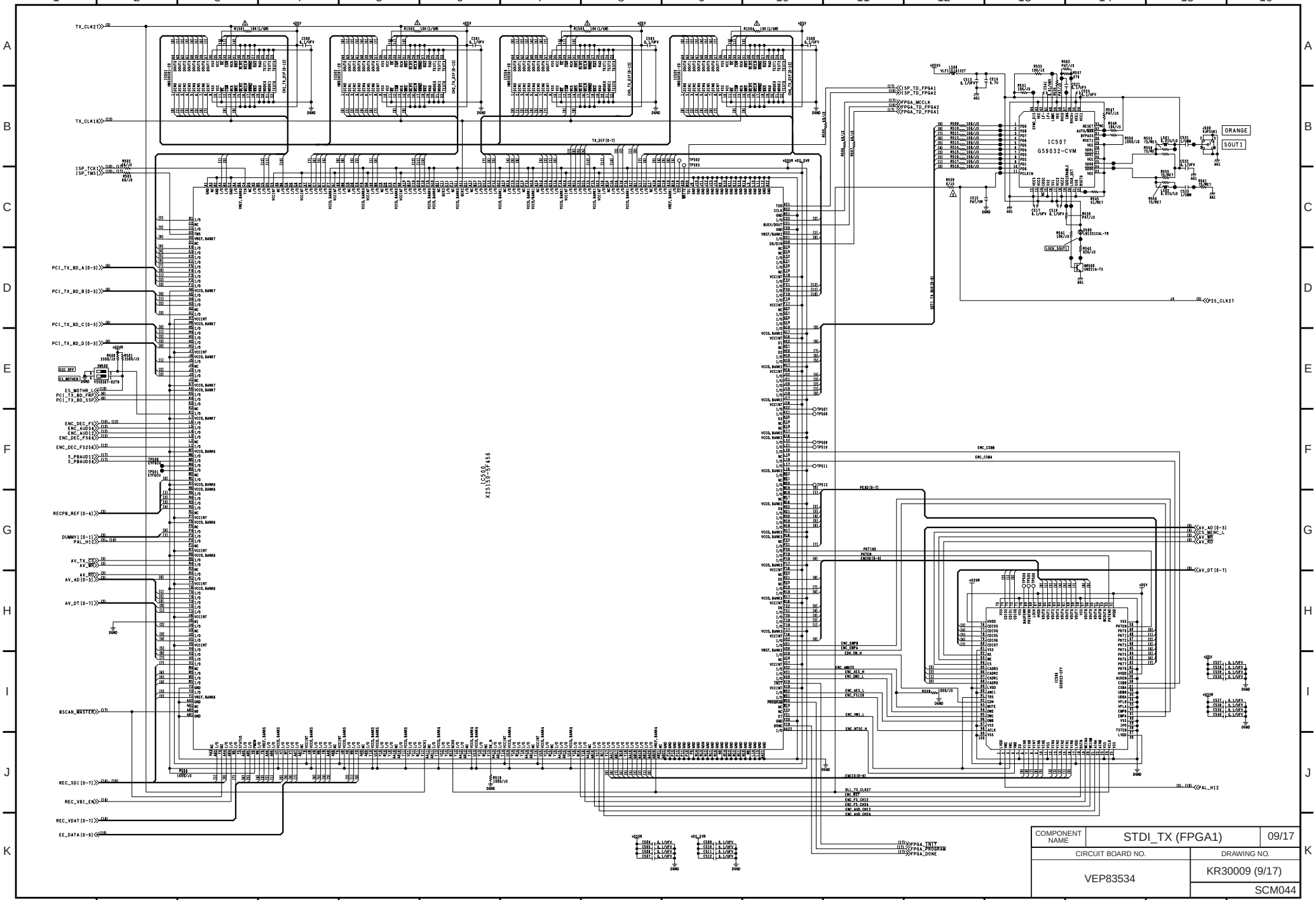

COMPONENT NAME	STDI_TX (FPGA1)	09/17
CIRCUIT BOARD NO.		DRAWING NO.
VEP83534		KR30009 (9/17)
		SCM044

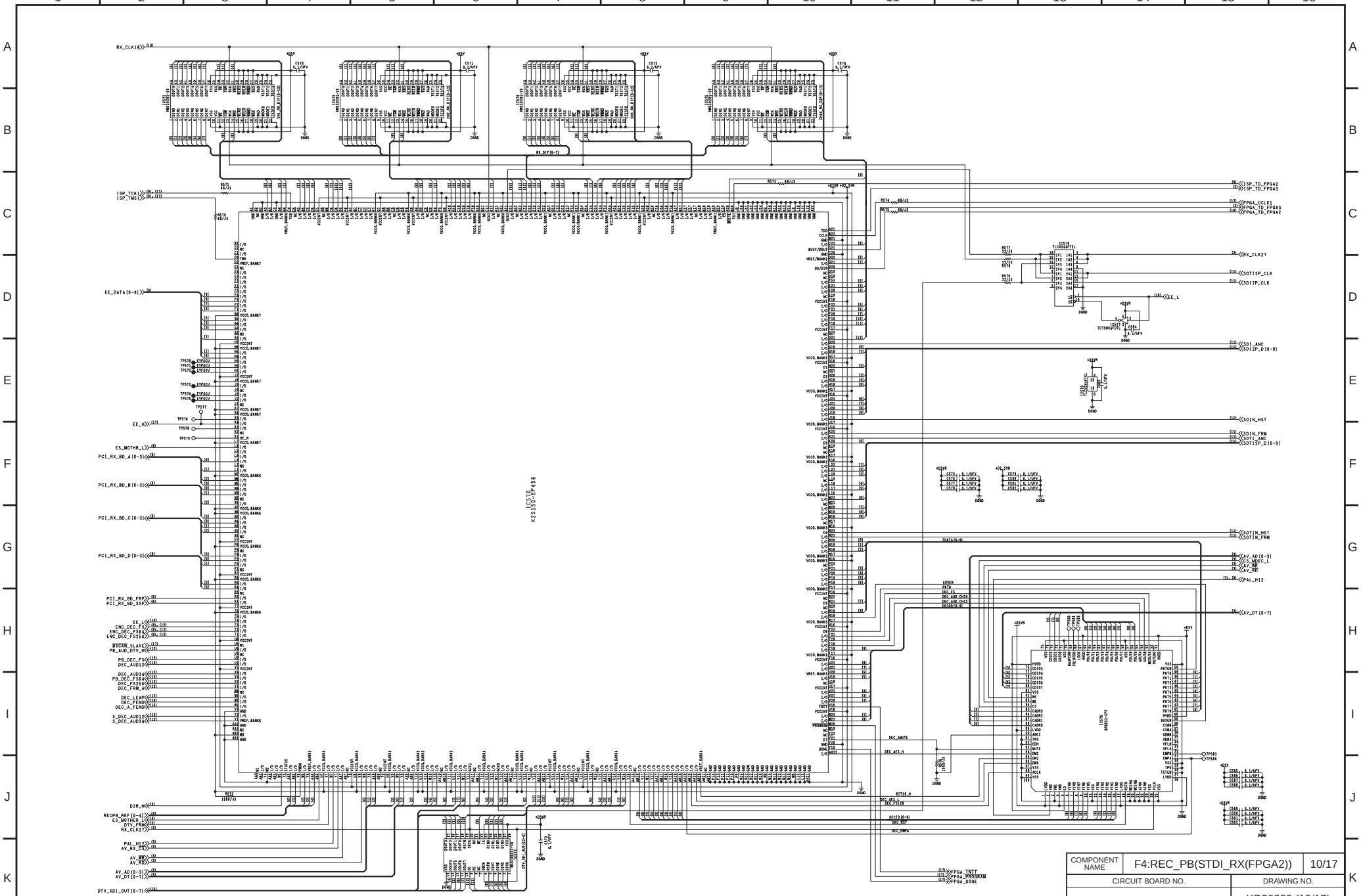

COMPONENT NAME	F4:REC_PB(STDI_RX(FPGA2))	10/17
CIRCUIT BOARD NO.		DRAWING NO.
VEP83534		KR30009 (10/17)
		SCM045

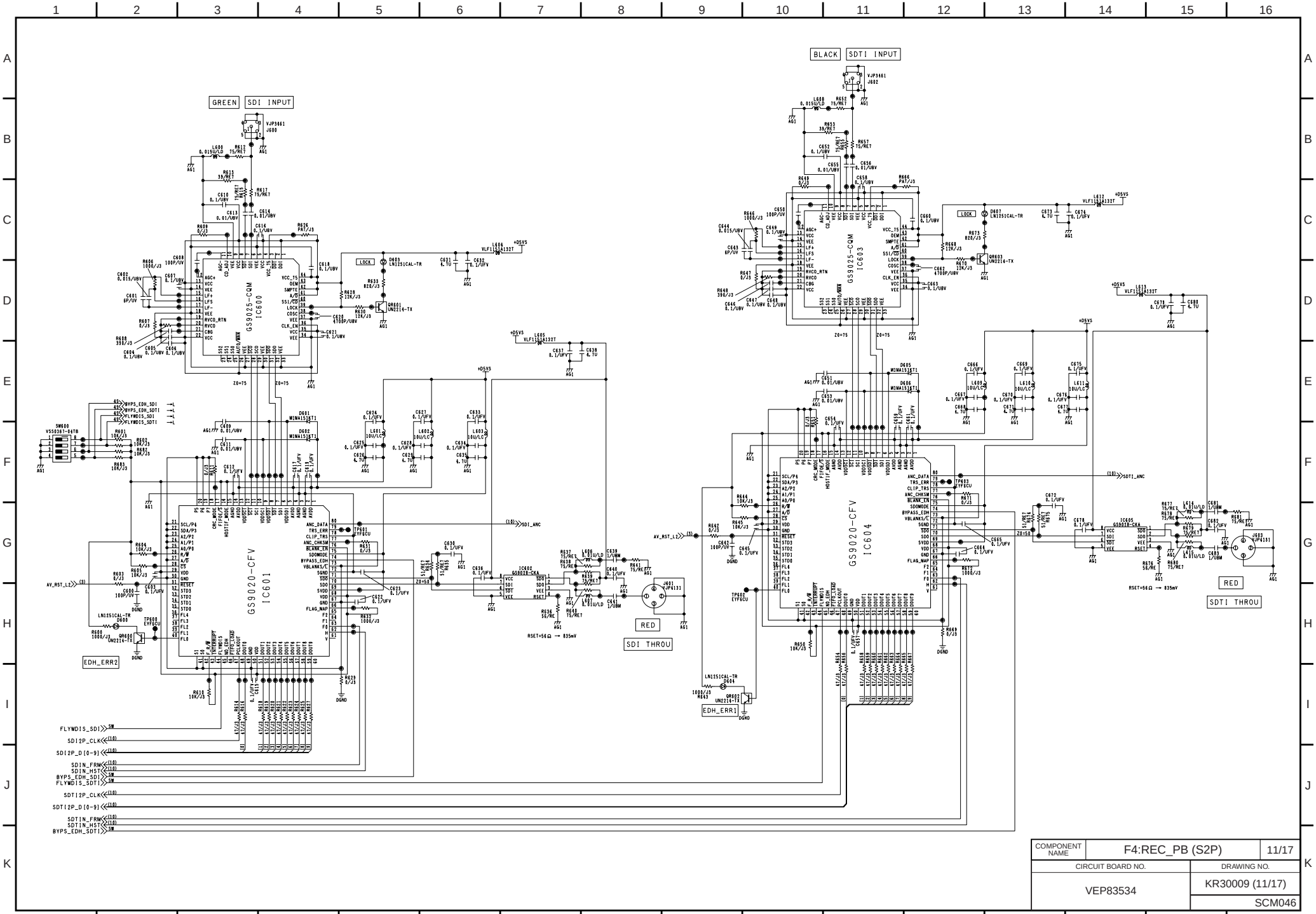

COMPONENT NAME	F4:REC_PB (S2P)	11/17
CIRCUIT BOARD NO.	DRAWING NO.	
VEP83534	KR30009 (11/17)	
	SCM046	

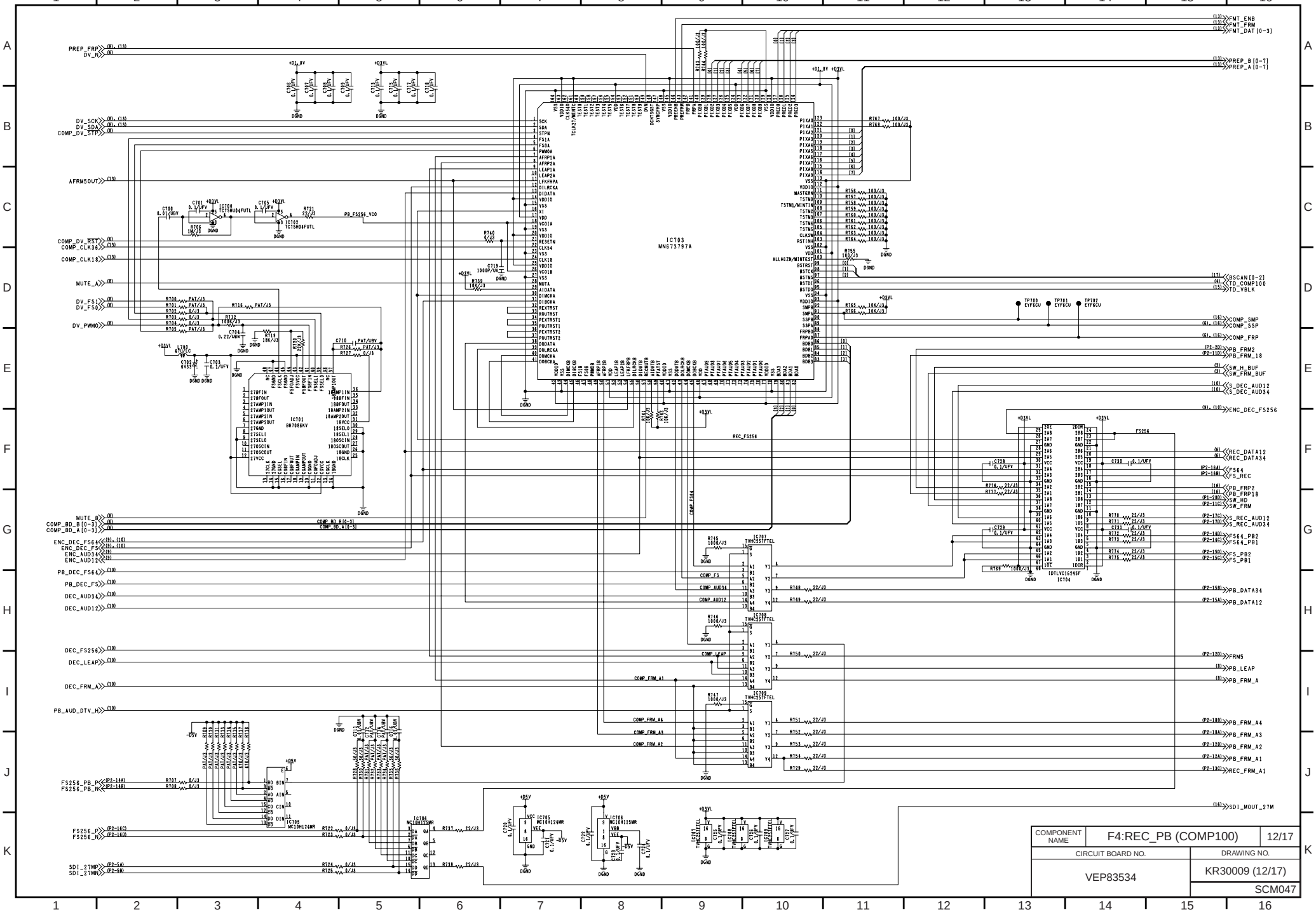
IC703
MN673797A
IC701
BH7886KV
IC704
IDTLVC16245F
IC705
MC10H124MR
IC706
MC10H125MR
IC707
TVHC257FTEL
IC708
TVHC257FTEL
IC709
TVHC257FTEL
IC710
TVHC257FTEL
IC711
TVHC257FTEL
IC712
TVHC257FTEL
IC713
TVHC257FTEL
IC714
TVHC257FTEL
IC715
TVHC257FTEL
IC716
TVHC257FTEL
IC717
TVHC257FTEL
IC718
TVHC257FTEL
IC719
TVHC257FTEL
IC720
TVHC257FTEL
IC721
TVHC257FTEL
IC722
TVHC257FTEL
IC723
TVHC257FTEL
IC724
TVHC257FTEL
IC725
TVHC257FTEL
IC726
TVHC257FTEL
IC727
TVHC257FTEL
IC728
TVHC257FTEL
IC729
TVHC257FTEL
IC730
TVHC257FTEL
IC731
TVHC257FTEL
IC732
TVHC257FTEL
IC733
TVHC257FTEL
IC734
TVHC257FTEL
IC735
TVHC257FTEL
IC736
TVHC257FTEL
IC737
TVHC257FTEL
IC738
TVHC257FTEL
IC739
TVHC257FTEL
IC740
TVHC257FTEL
IC741
TVHC257FTEL
IC742
TVHC257FTEL
IC743
TVHC257FTEL
IC744
TVHC257FTEL
IC745
TVHC257FTEL
IC746
TVHC257FTEL
IC747
TVHC257FTEL
IC748
TVHC257FTEL
IC749
TVHC257FTEL
IC750
TVHC257FTEL
IC751
TVHC257FTEL
IC752
TVHC257FTEL
IC753
TVHC257FTEL
IC754
TVHC257FTEL
IC755
TVHC257FTEL
IC756
TVHC257FTEL
IC757
TVHC257FTEL
IC758
TVHC257FTEL
IC759
TVHC257FTEL
IC760
TC15N004FUTL
IC761
TC15N004FUTL
IC762
TC15N004FUTL
IC763
TC15N004FUTL
IC764
TC15N004FUTL
IC765
TC15N004FUTL
IC766
TC15N004FUTL
IC767
TC15N004FUTL
IC768
TC15N004FUTL
IC769
TC15N004FUTL
IC770
TC15N004FUTL
IC771
TC15N004FUTL
IC772
TC15N004FUTL
IC773
TC15N004FUTL
IC774
TC15N004FUTL
IC775
TC15N004FUTL
IC776
TC15N004FUTL
IC777
TC15N004FUTL
IC778
TC15N004FUTL
IC779
TC15N004FUTL

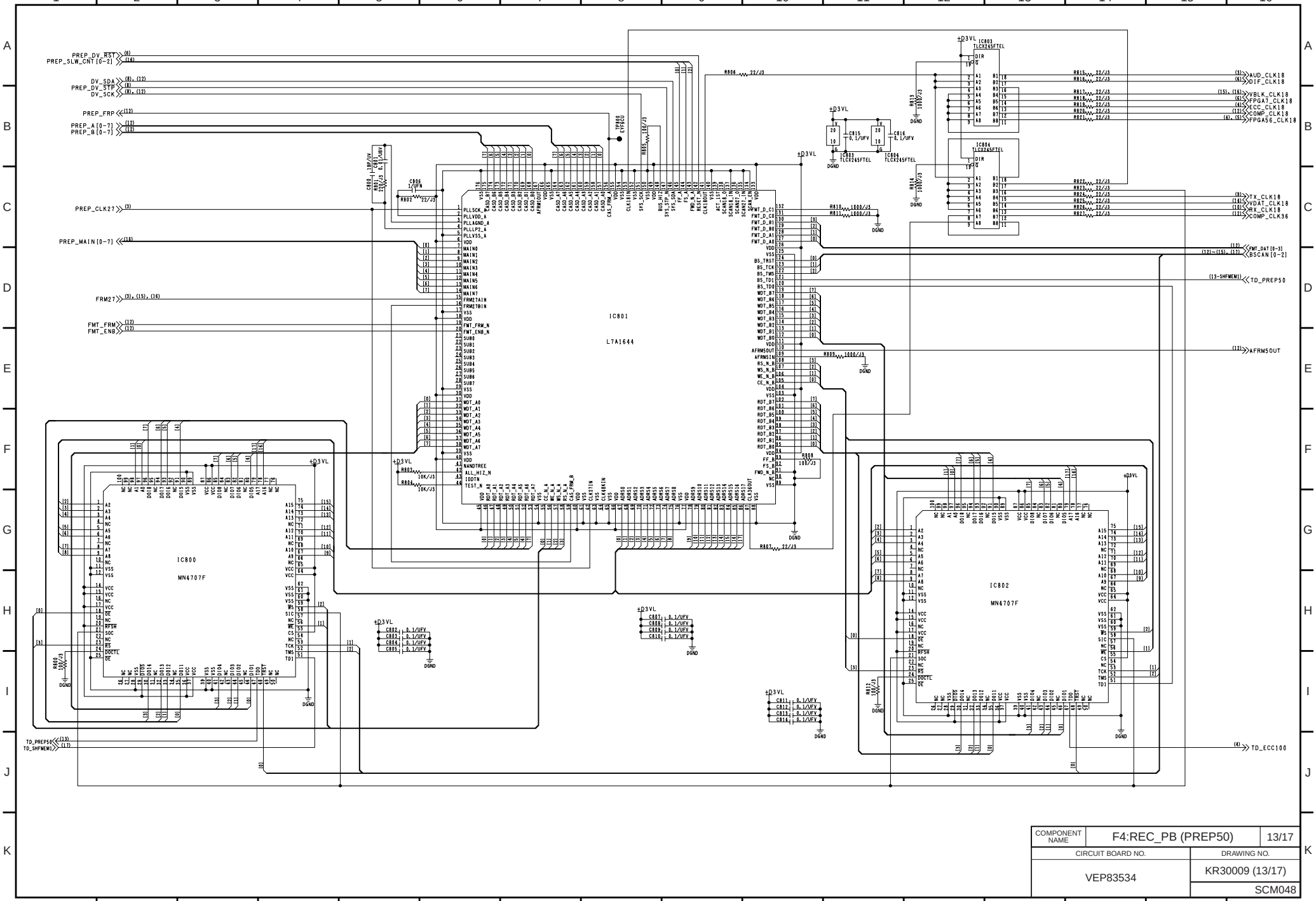

COMPONENT NAME	F4:REC_PB (PREP50)	13/17
CIRCUIT BOARD NO.	DRAWING NO.	
VEP83534	KR30009 (13/17)	
	SCM048	

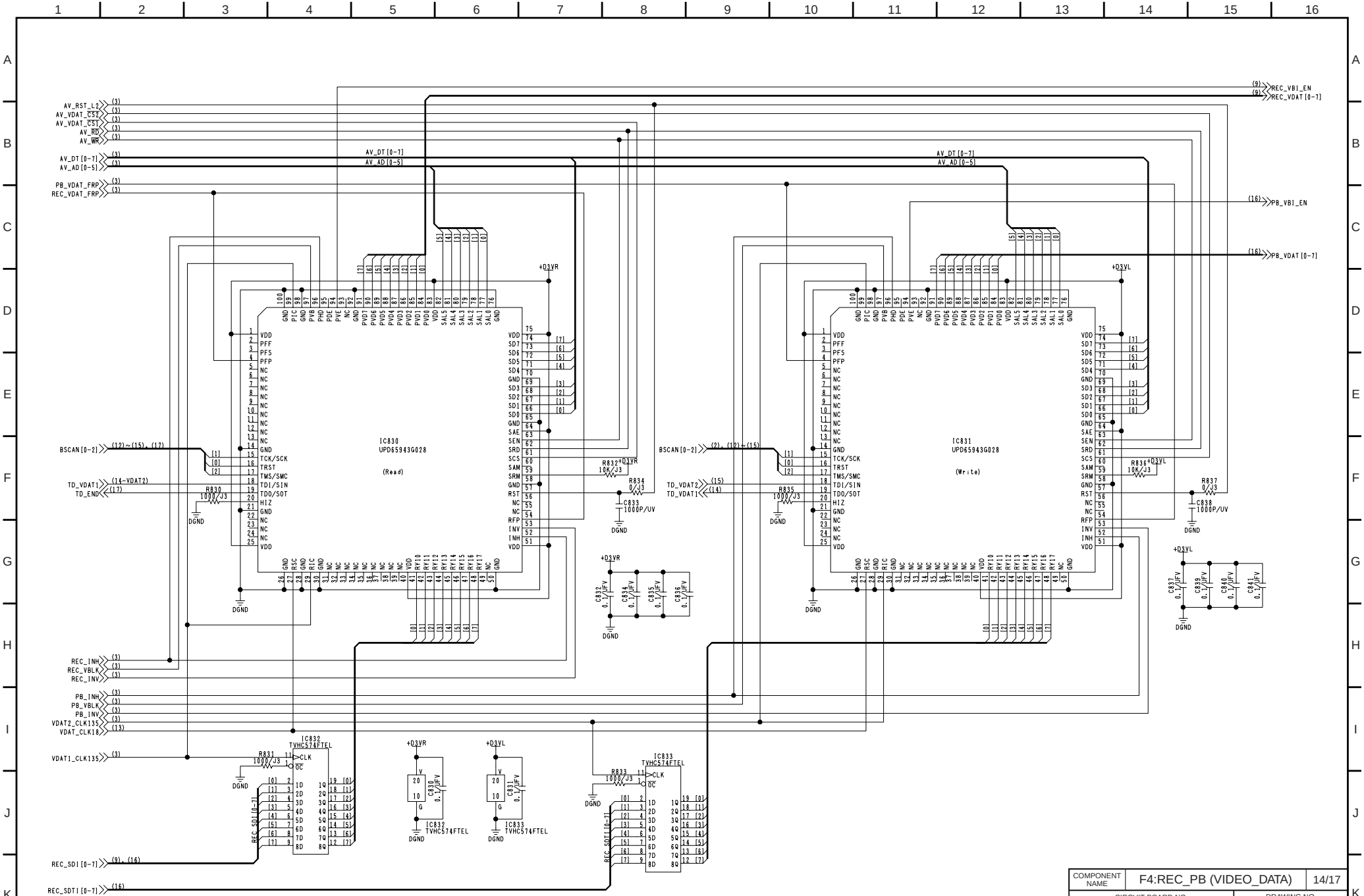

COMPONENT NAME	F4:REC_PB (VIDEO_DATA)	14/17
CIRCUIT BOARD NO.		DRAWING NO.
VEP83534		KR30009 (14/17)
		SCM049

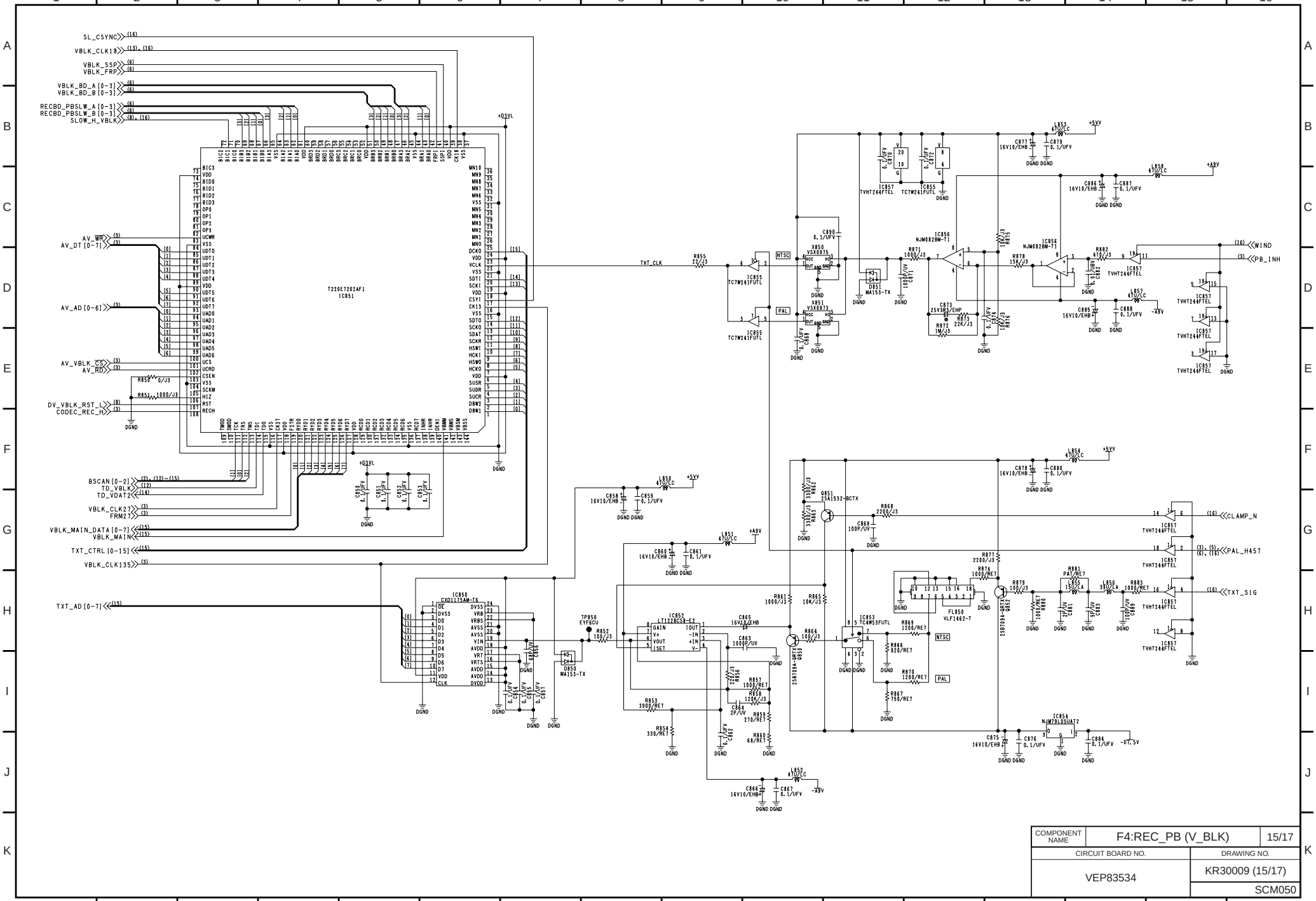

COMPONENT NAME	F4:REC_PB (V_BLK)	15/17
CIRCUIT BOARD NO.		DRAWING NO.
VEP83534		KR30009 (15/17)
		SCM050

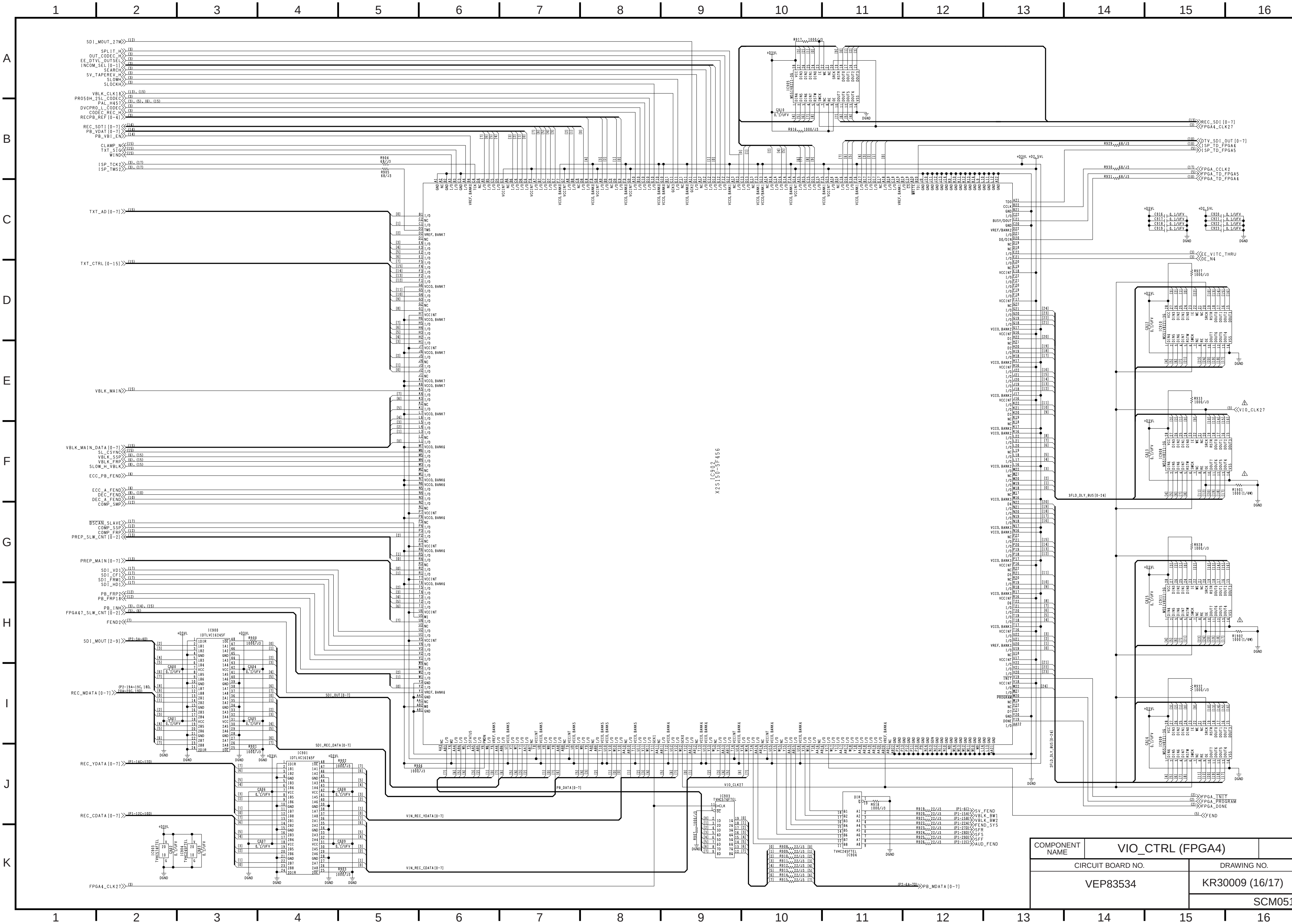

COMPONENT NAME	VIO_CTRL (FPGA4)
CIRCUIT BOARD NO.	DRAWING NO.
VEP83534	KR30009 (16/17)
	SCM051

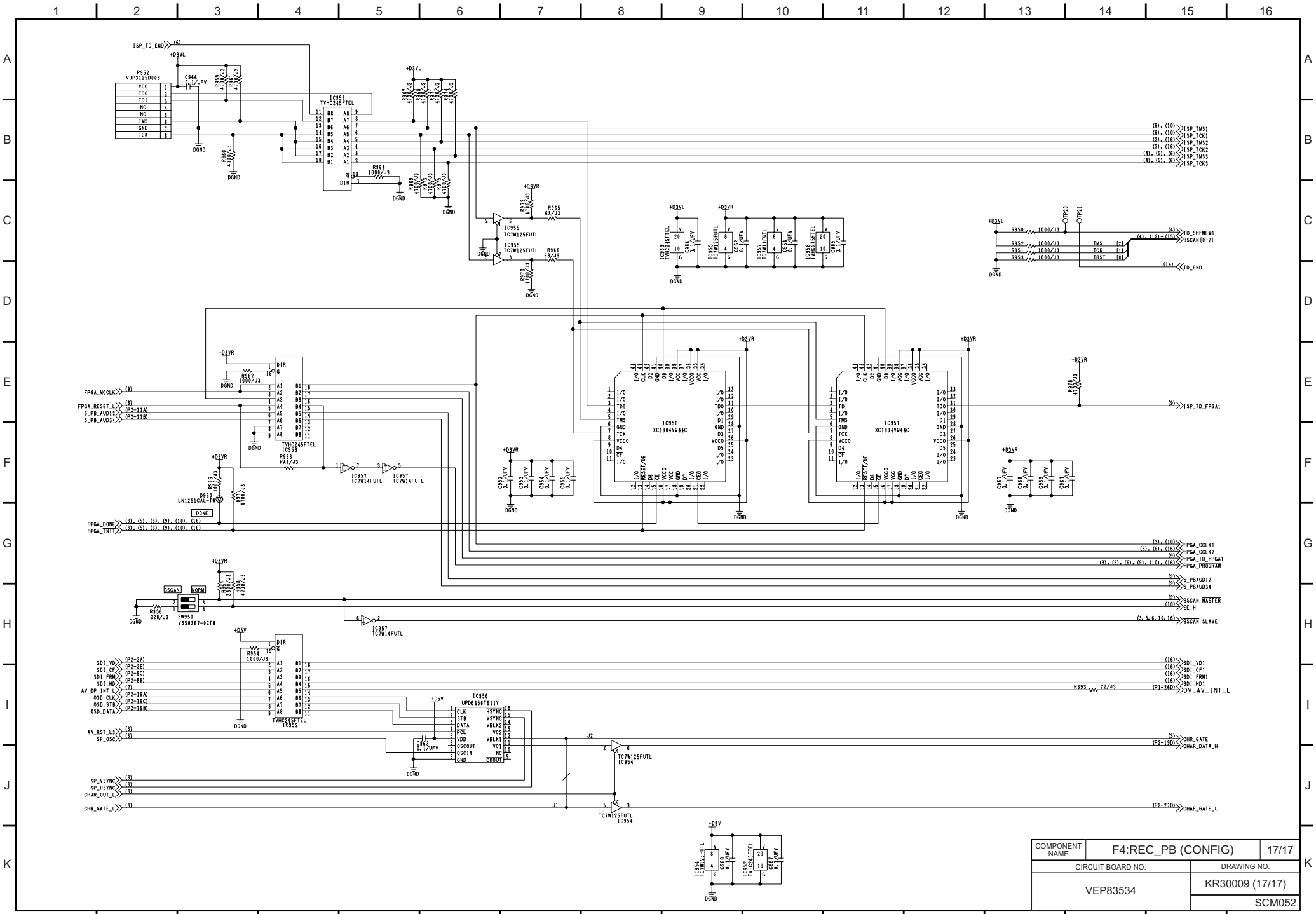

COMPONENT NAME	F4:REC_PB (CONFIG)	17/17
CIRCUIT BOARD NO.		DRAWING NO.
VEP83534		KR30009 (17/17)
		SCM052

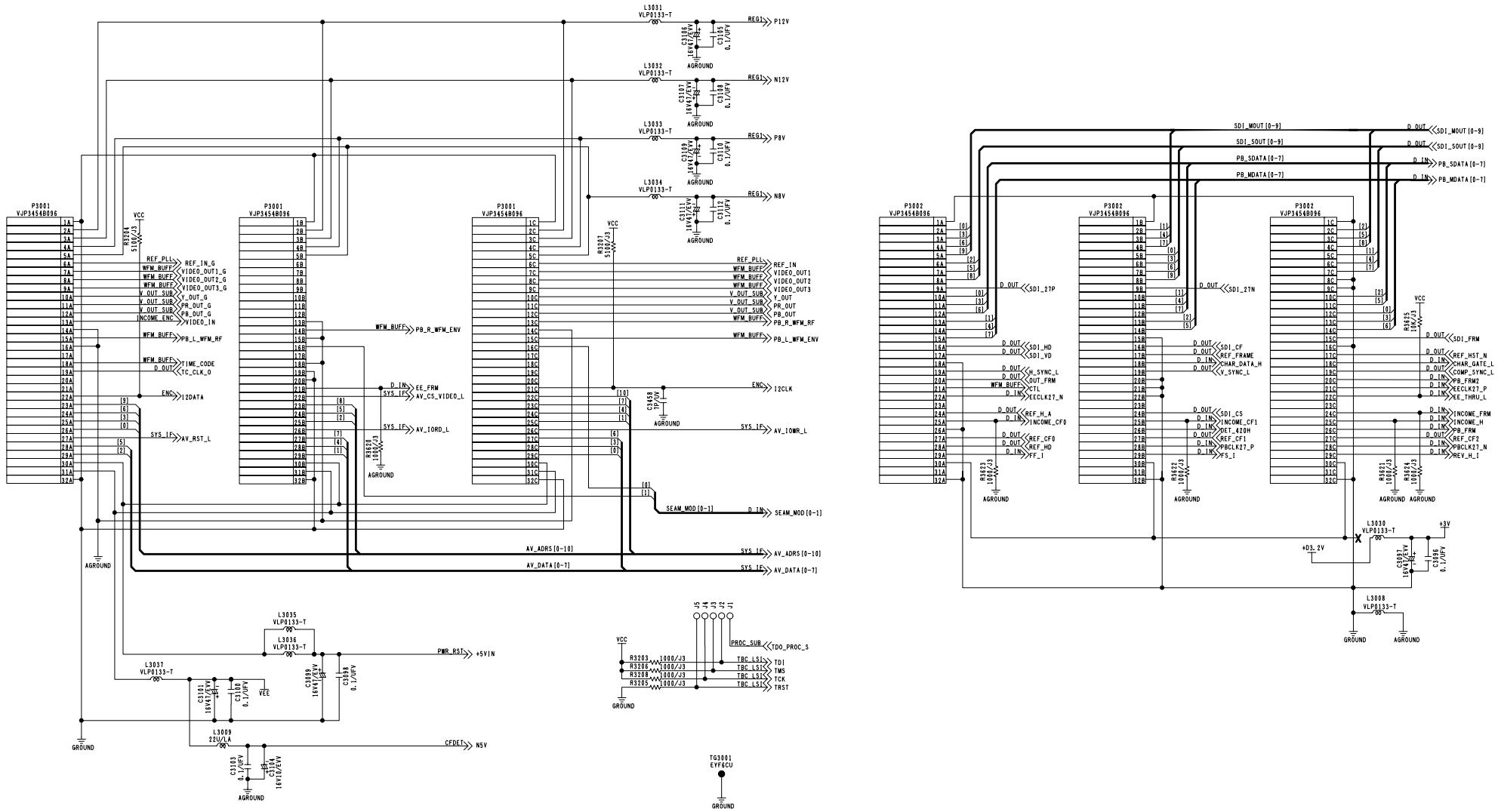

COMPONENT NAME	F5:V OUT (CONNECTOR)	01/40
CIRCUIT BOARD NO.		DRAWING NO.
VEP83494A-1		KR3X95 (1/40)
		SCM053

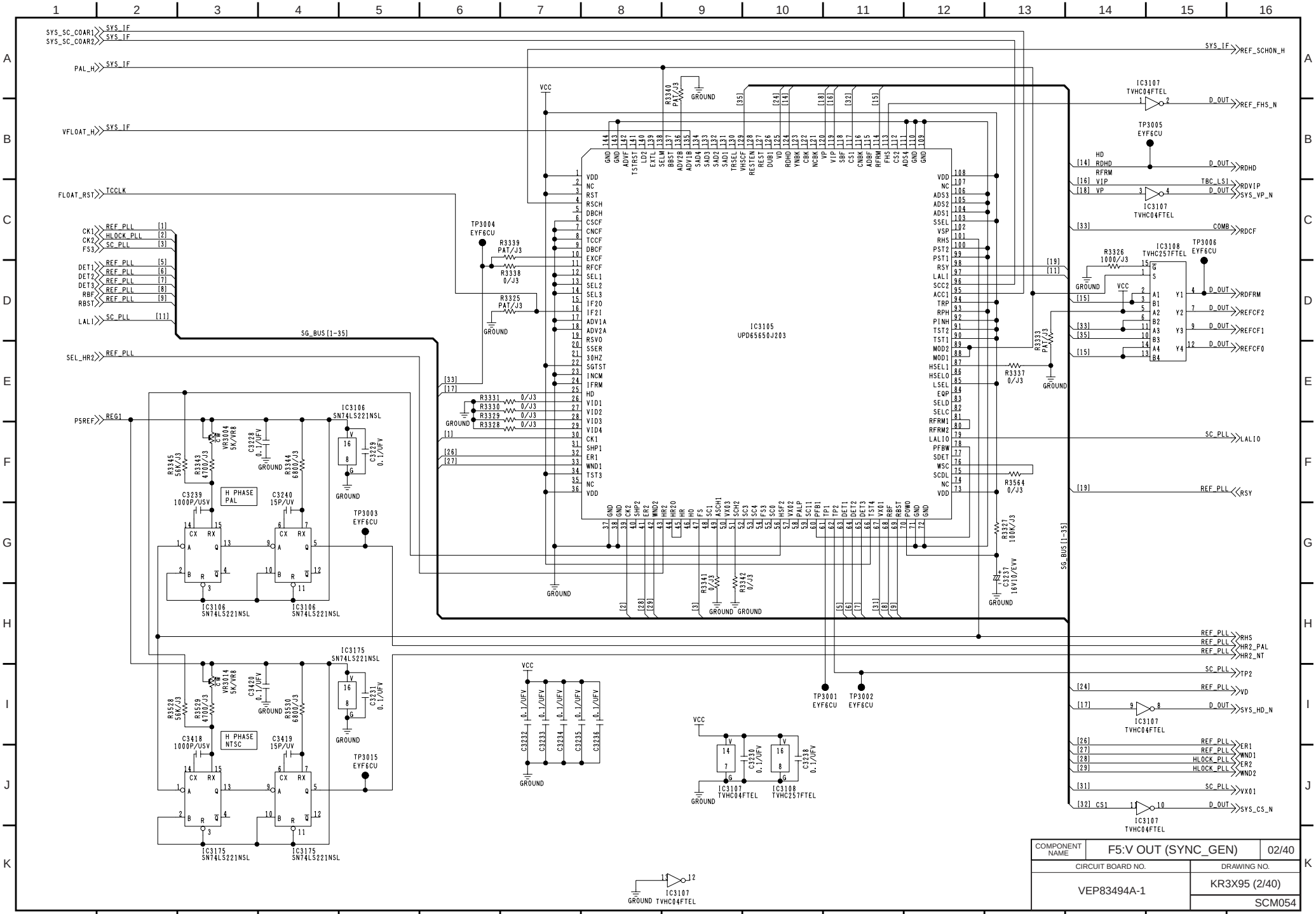

COMPONENT NAME	F5:V OUT (SYNC_GEN)	02/40
CIRCUIT BOARD NO.	DRAWING NO.	
VEP83494A-1	KR3X95 (2/40)	
	SCM054	

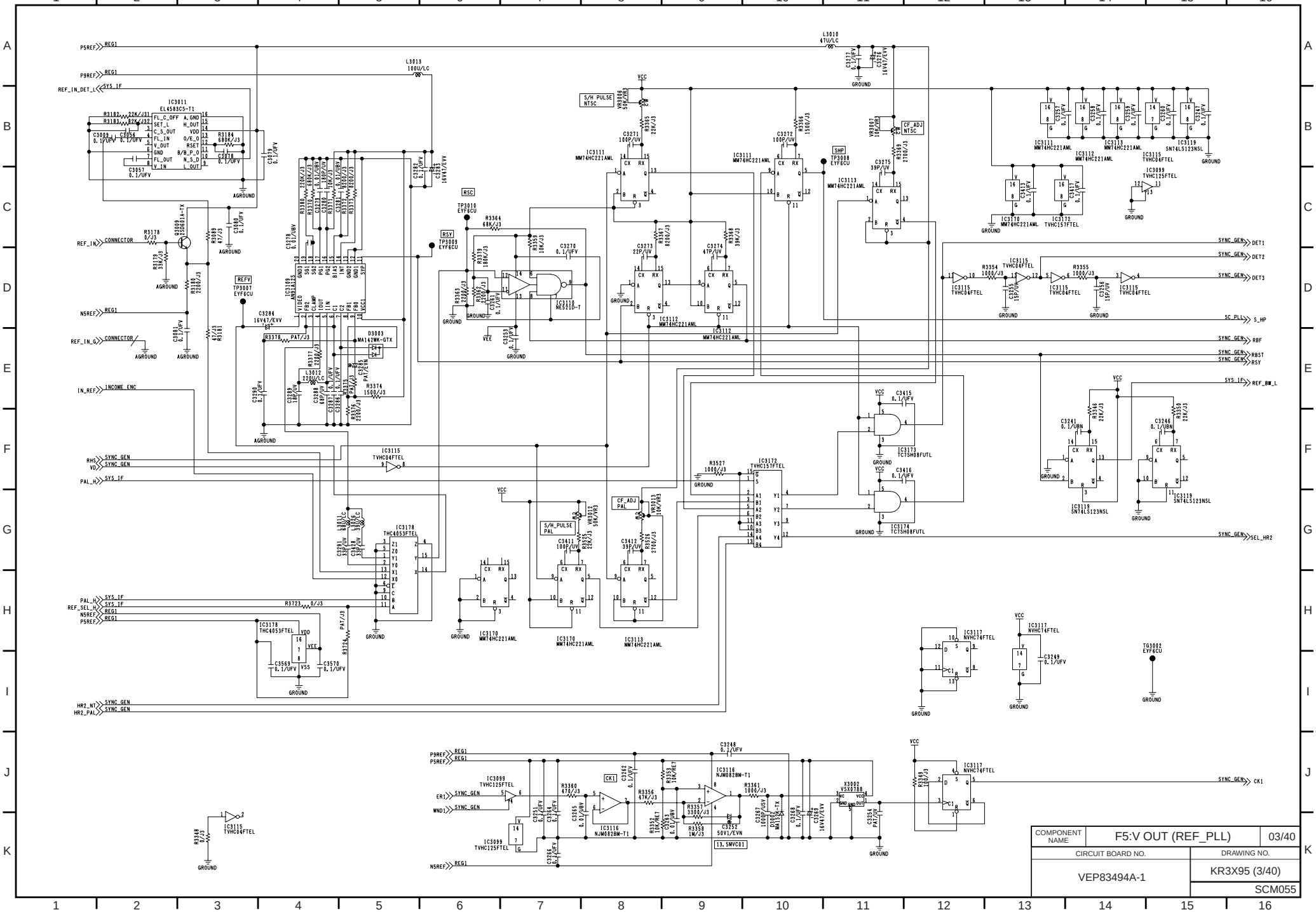

COMPONENT NAME	F5:V OUT (REF_PLL)	03/40
CIRCUIT BOARD NO.	DRAWING NO.	
VEP83494A-1	KR3X95 (3/40)	
	SCM055	

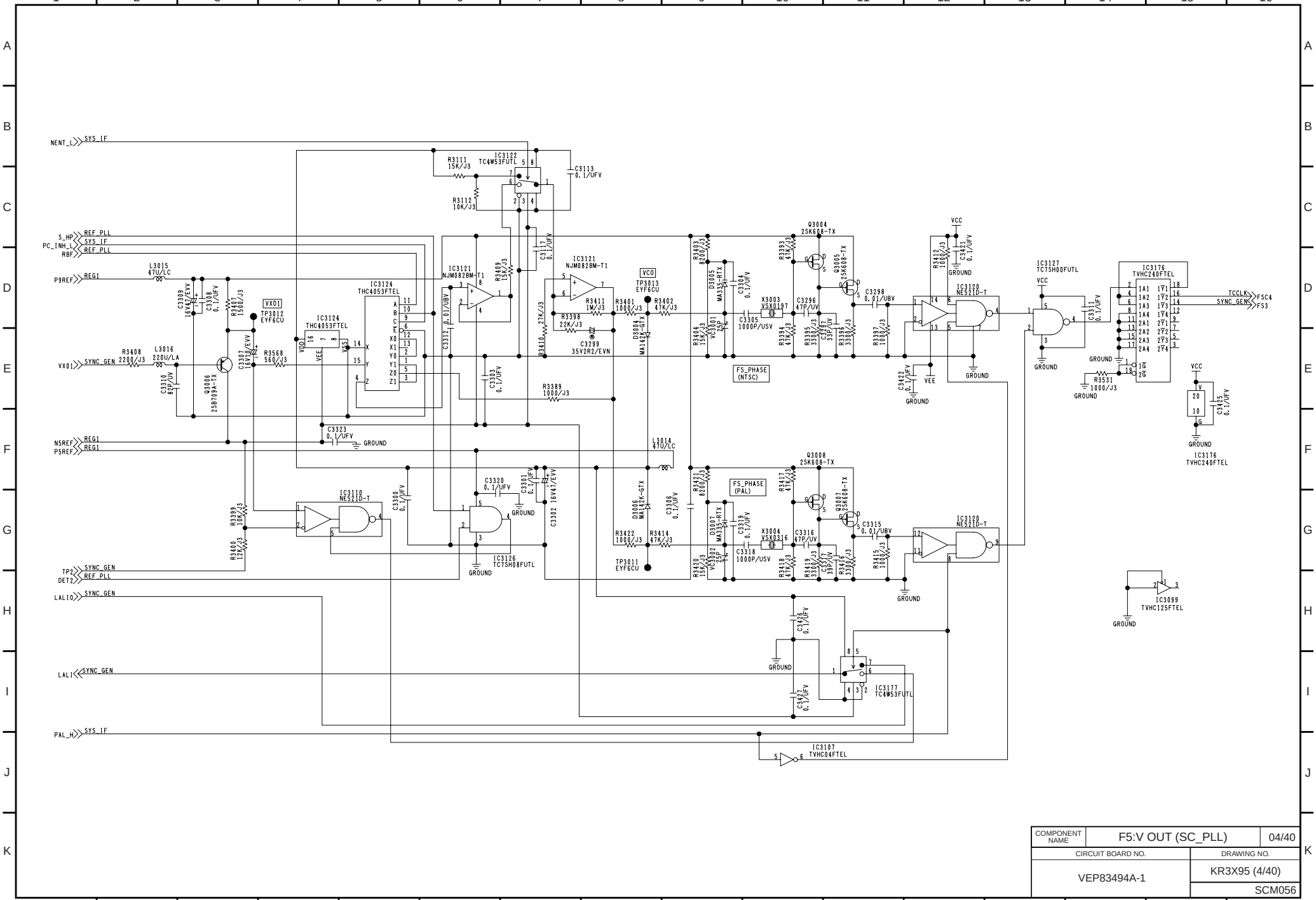

COMPONENT NAME	F5:V OUT (SC_PLL)	04/40
CIRCUIT BOARD NO.	DRAWING NO.	
VEP83494A-1	KR3X95 (4/40)	
	SCM056	

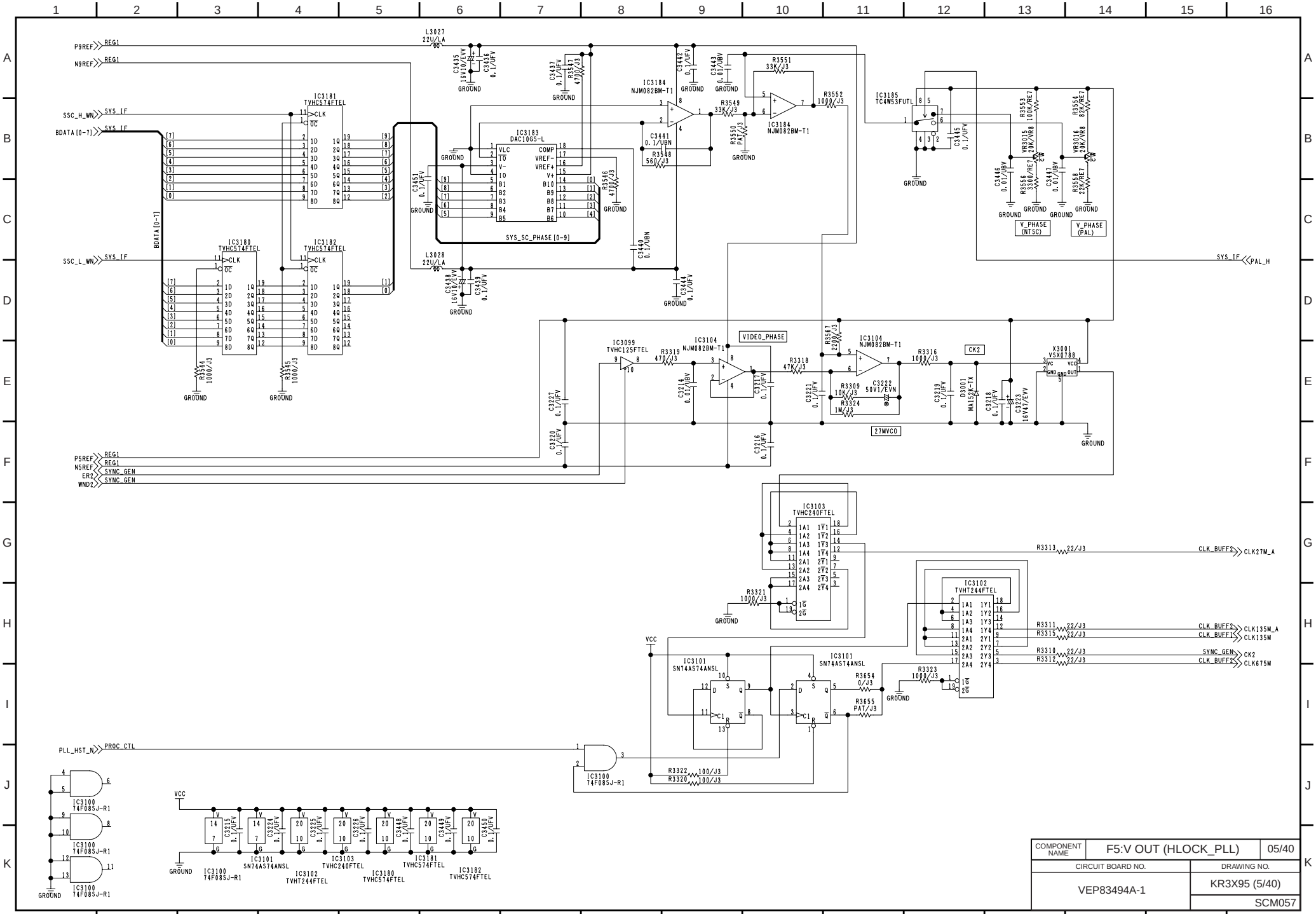

COMPONENT NAME	F5:V OUT (HLOCK_PLL)	05/40
CIRCUIT BOARD NO.		DRAWING NO.
VEP83494A-1		KR3X95 (5/40)
		SCM057

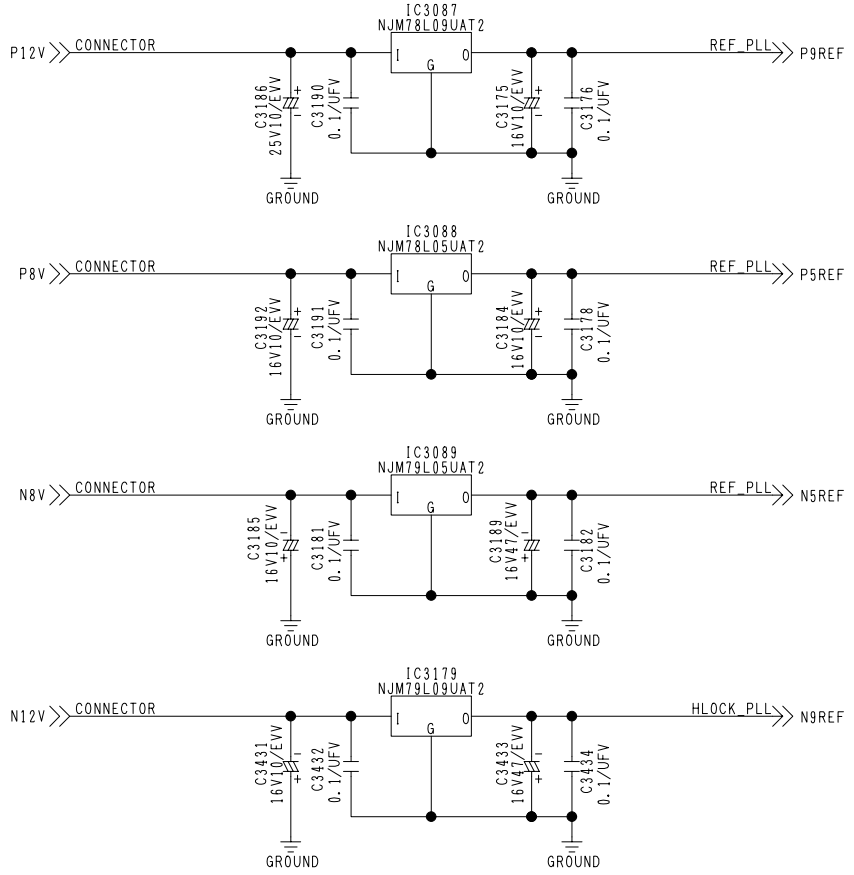

COMPONENT NAME	F5:V OUT (REG1)	06/40
CIRCUIT BOARD NO.		DRAWING NO.
VEP83494A-1		KR3X95 (6/40)
		SCM058

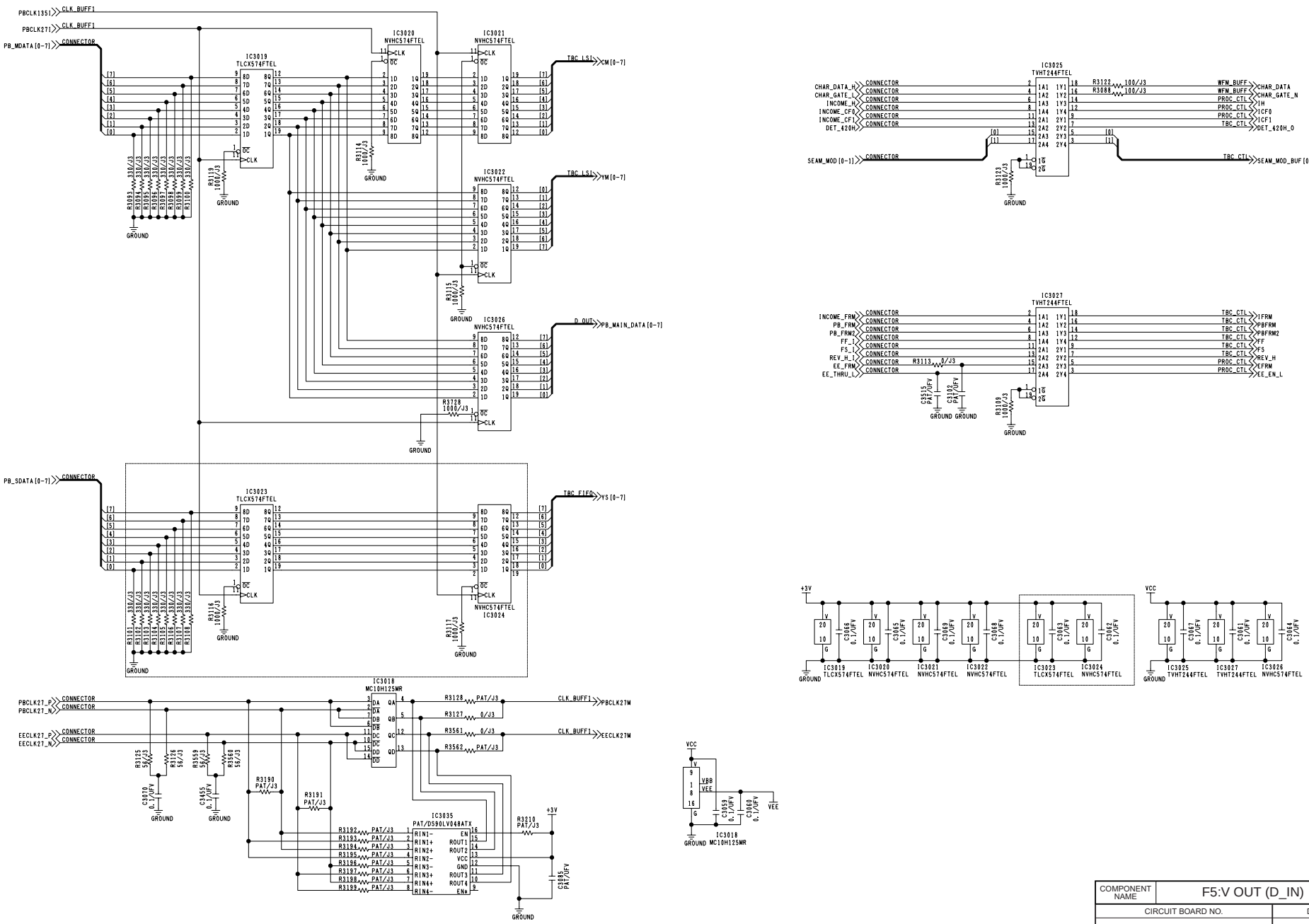

COMPONENT NAME	F5:V OUT (D_IN)	07/40
CIRCUIT BOARD NO.		DRAWING NO.
VEP83494A-1		KR3X95 (7/40)
		SCM059

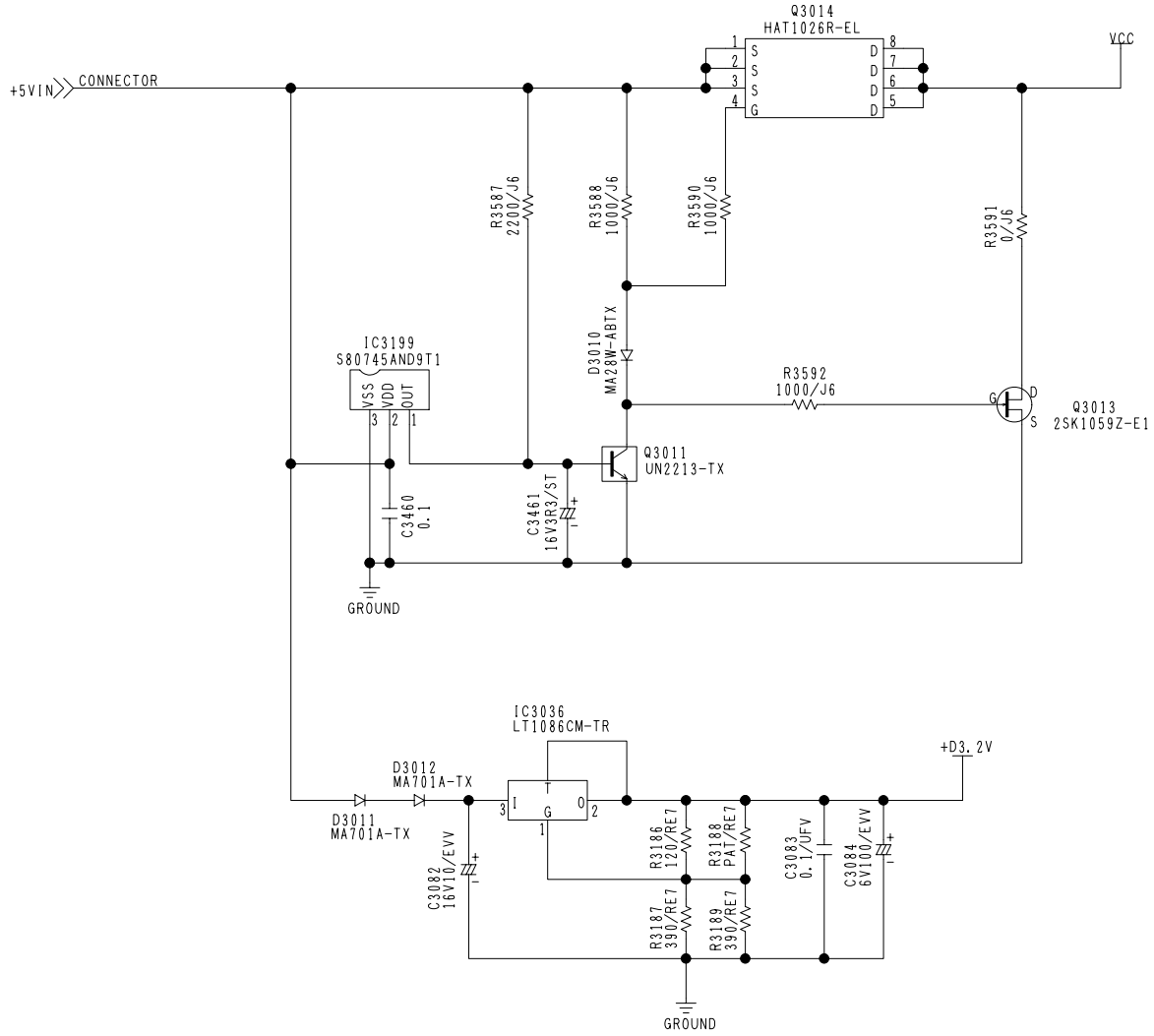

COMPONENT NAME	F5:V OUT (PWR_RST)	08/40
CIRCUIT BOARD NO.		DRAWING NO.
VEP83494A-1		KR3X95 (8/40)
		SCM060

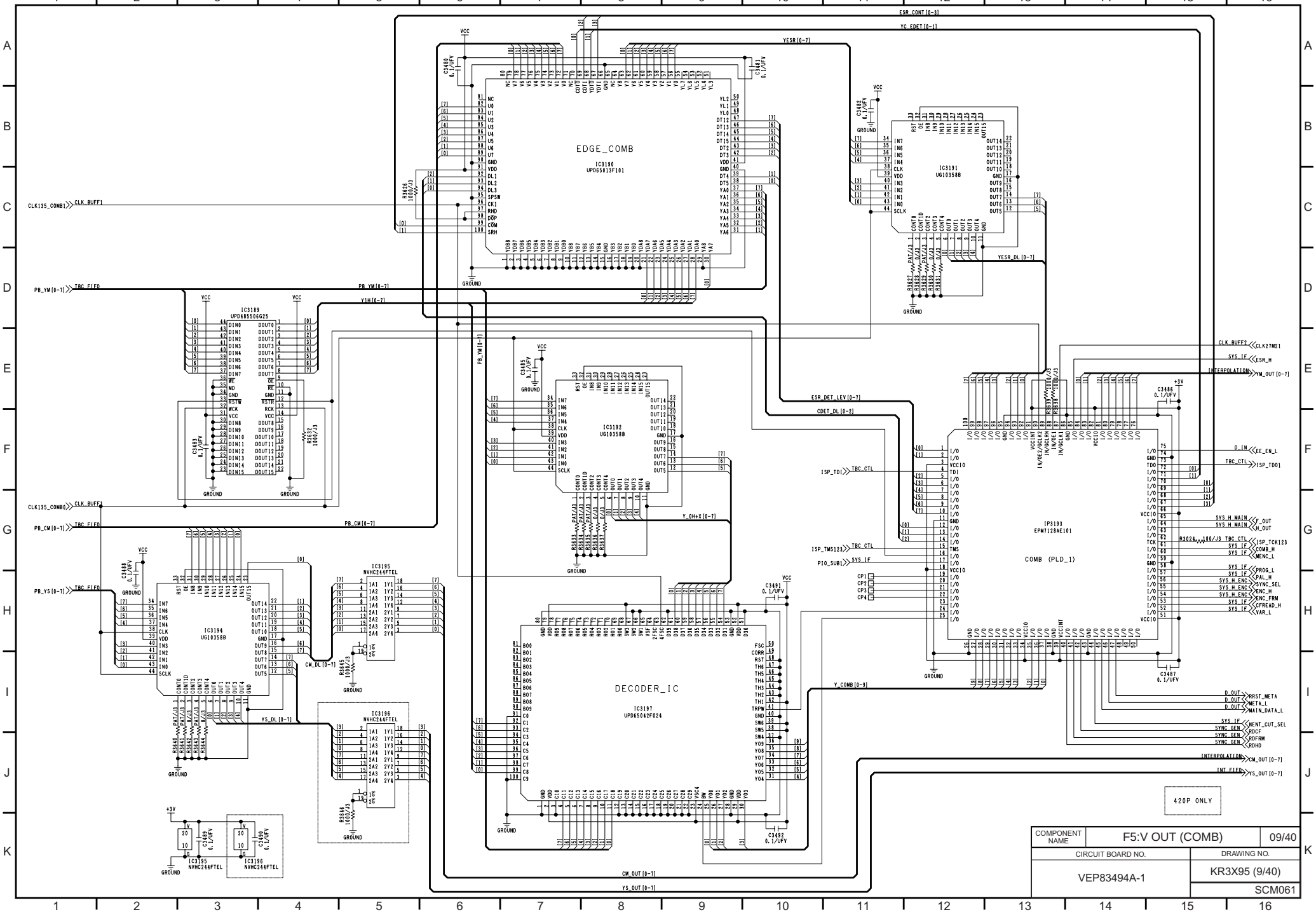
EDGE_COMB
IC3190
UPD65013F101
IC3191
UG10358B
IC3192
UG10358B
IC3193
EPM7128AE101
COMB (PLD_1)
IC3194
UG10358B
IC3195
NVHC244FTEL
IC3196
NVHC244FTEL
IC3197
UPD65042F024
DECODER_IC
420P ONLY
COMPONENT NAME
F5:V OUT (COMB)
09/40
CIRCUIT BOARD NO.
VEP83494A-1
DRAWING NO.
KR3X95 (9/40)
SCM061

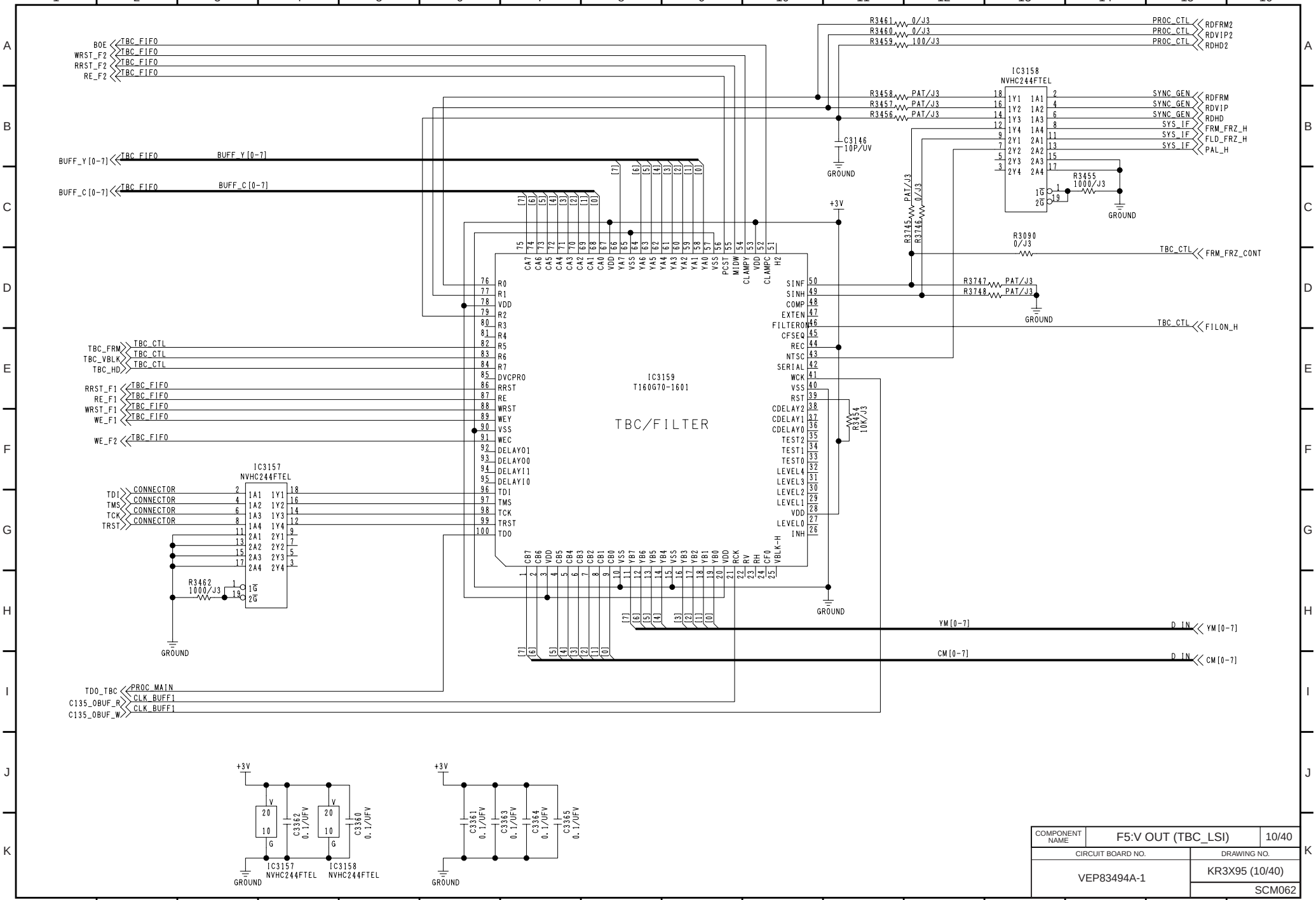

COMPONENT NAME	F5:V OUT (TBC_LSI)	10/40
CIRCUIT BOARD NO.	DRAWING NO.	
VEP83494A-1	KR3X95 (10/40)	
	SCM062	

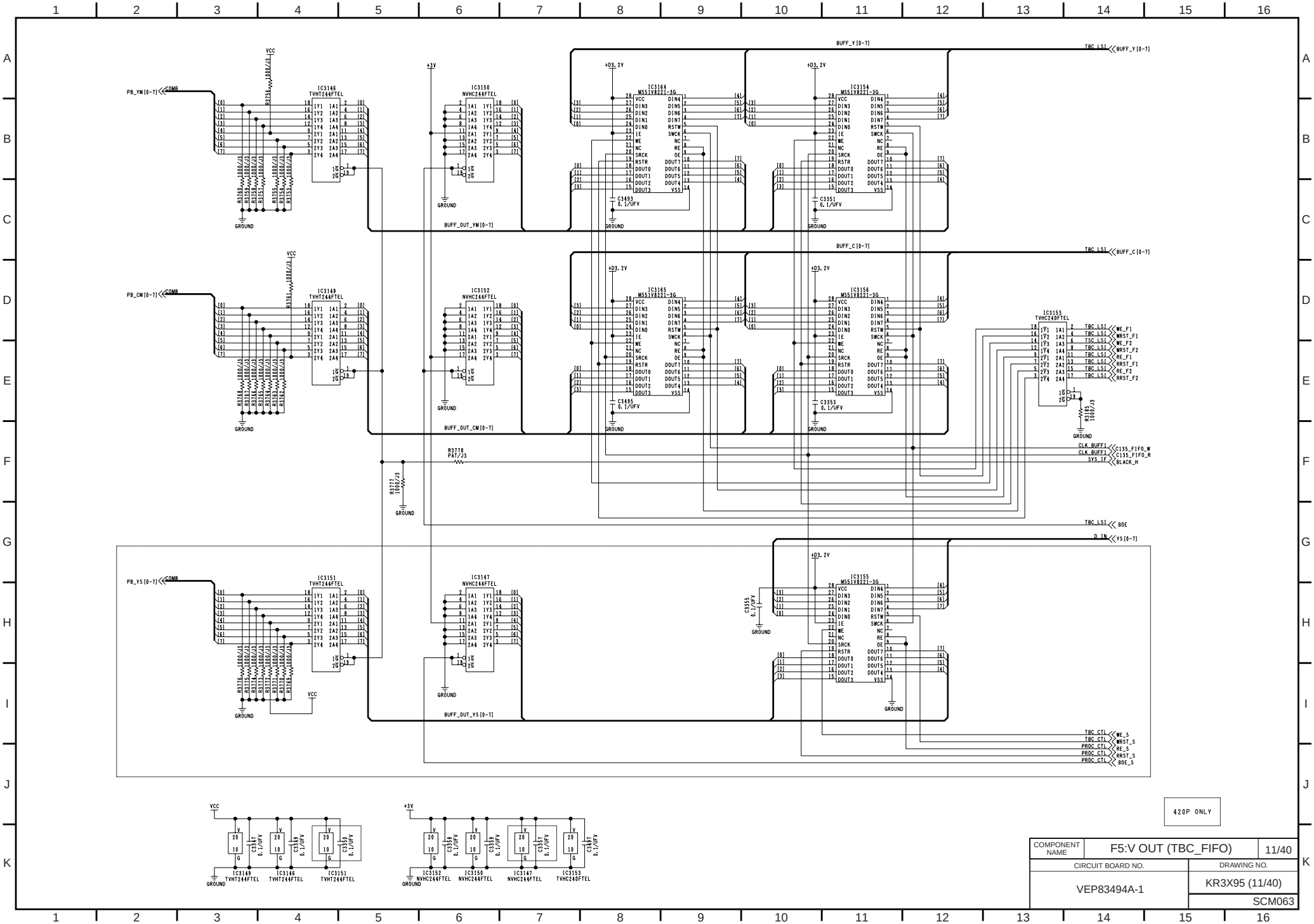

COMPONENT NAME	F5:V OUT (TBC_FIFO)	11/40
CIRCUIT BOARD NO.		DRAWING NO.
VEP83494A-1		KR3X95 (11/40)
		SCM063

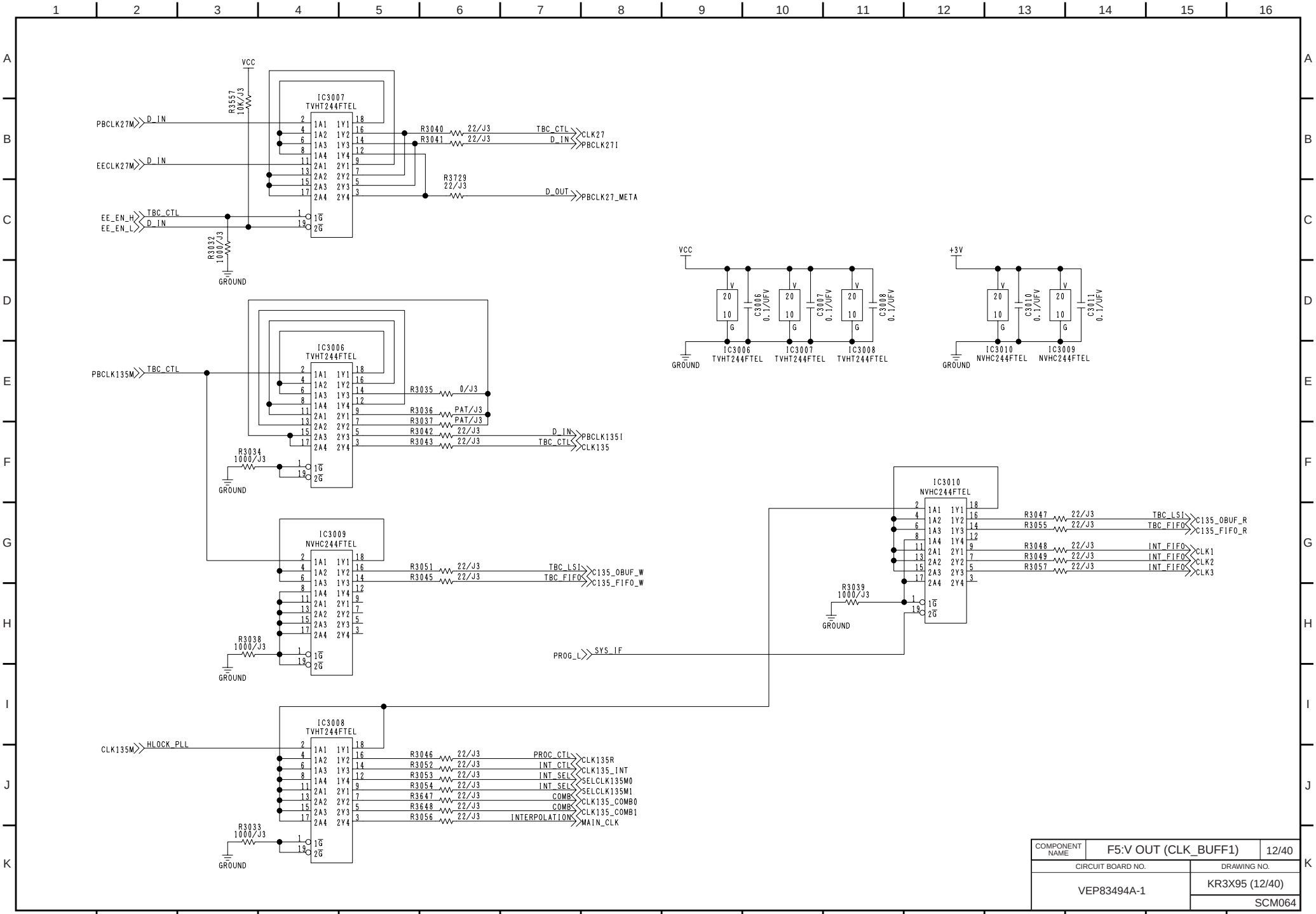

COMPONENT NAME	F5:V OUT (CLK_BUFF1)	12/40
CIRCUIT BOARD NO.	DRAWING NO.	
VEP83494A-1	KR3X95 (12/40)	
	SCM064	

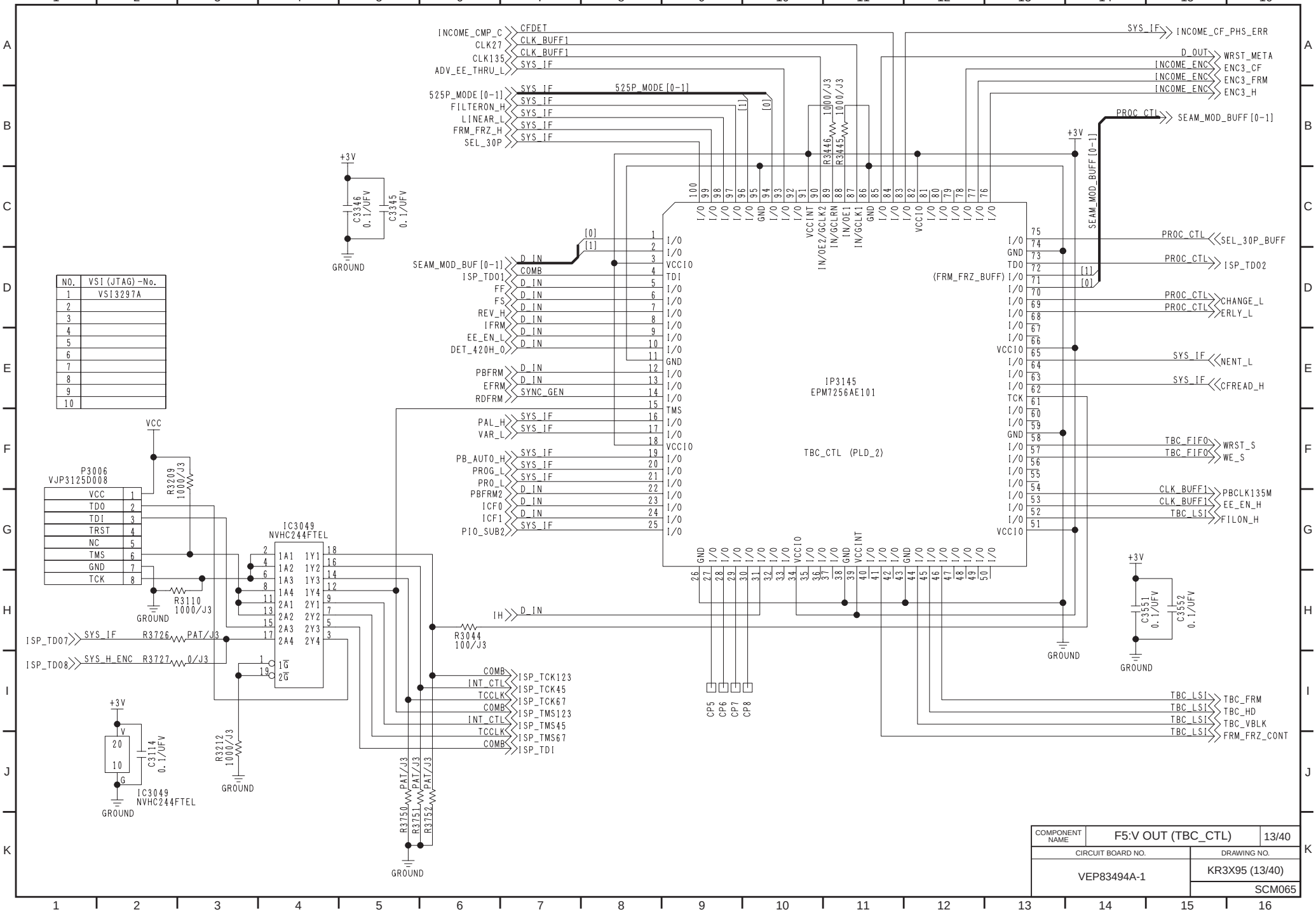

NO.	VSI (JTAG)-No.
1	VSI3297A
2	
3	
4	
5	
6	
7	
8	
9	
10	

COMPONENT NAME	F5:V OUT (TBC_CTL)	13/40
CIRCUIT BOARD NO.		DRAWING NO.
VEP83494A-1		KR3X95 (13/40)
		SCM065

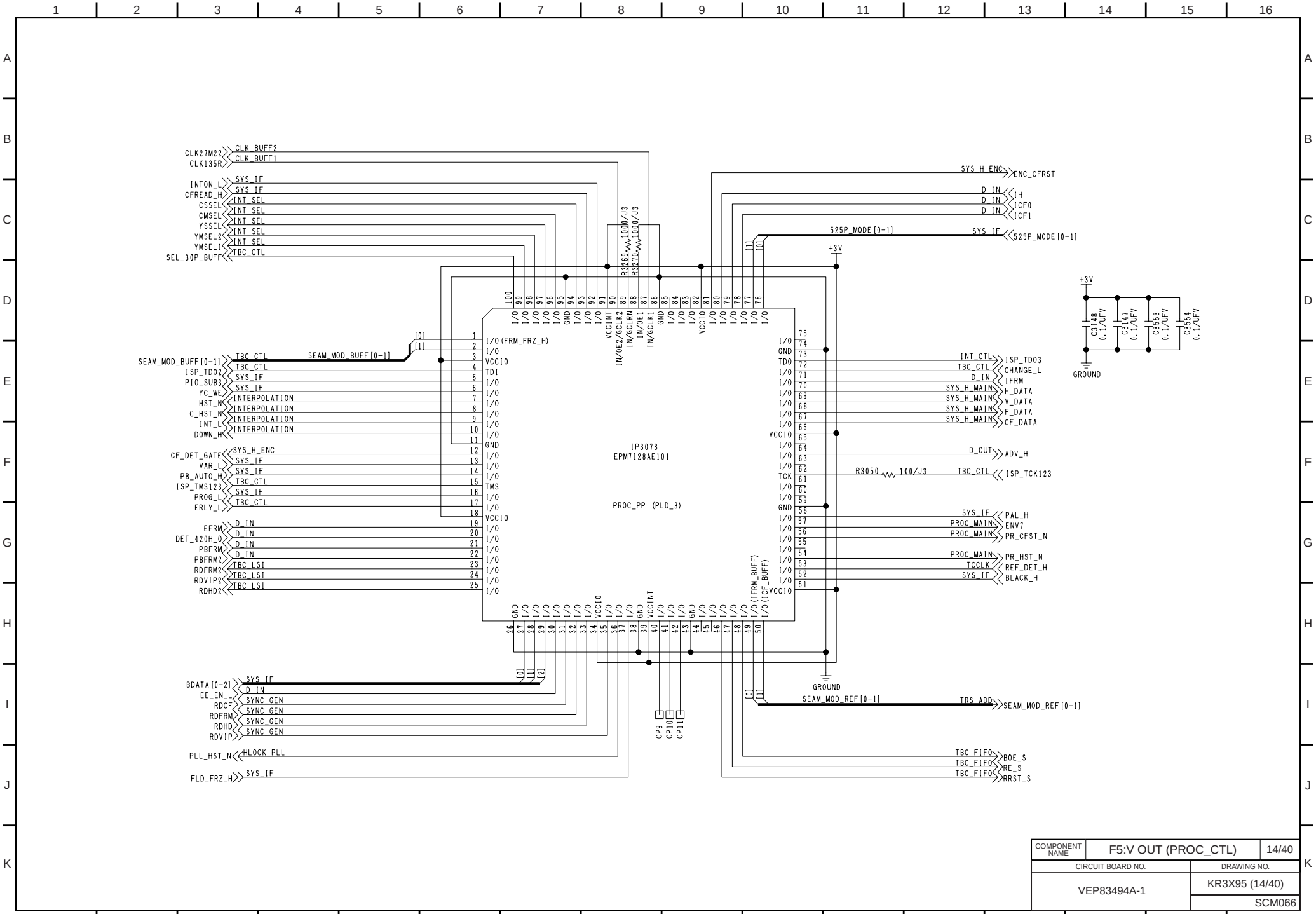

COMPONENT NAME	F5:V OUT (PROC_CTL)	14/40
CIRCUIT BOARD NO.	DRAWING NO.	
VEP83494A-1	KR3X95 (14/40)	
	SCM066	

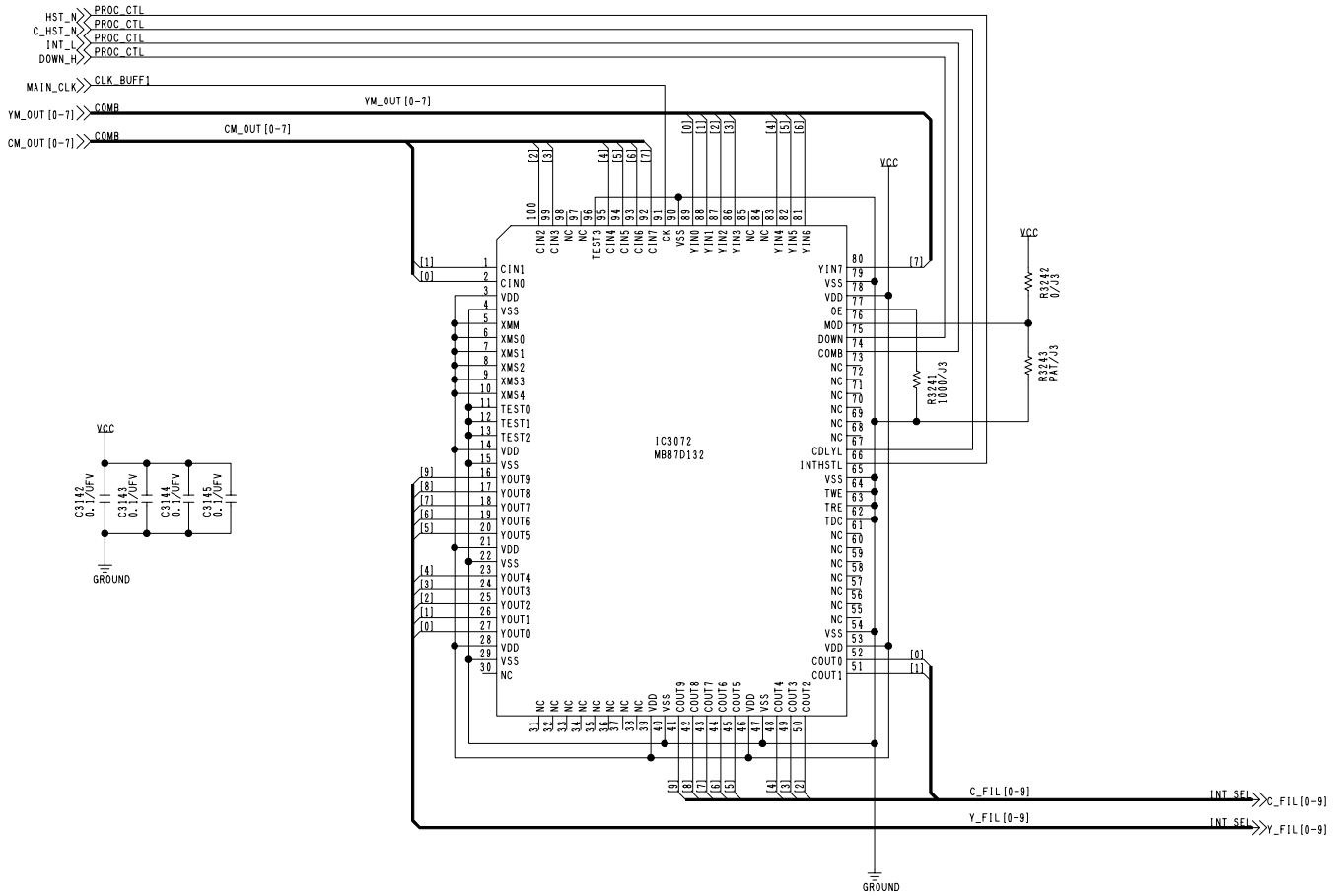

COMPONENT NAME	F5:V OUT (INTERPOLATION)	15/40
CIRCUIT BOARD NO.		DRAWING NO.
VEP83494A-1		KR3X95 (15/40)
		SCM067

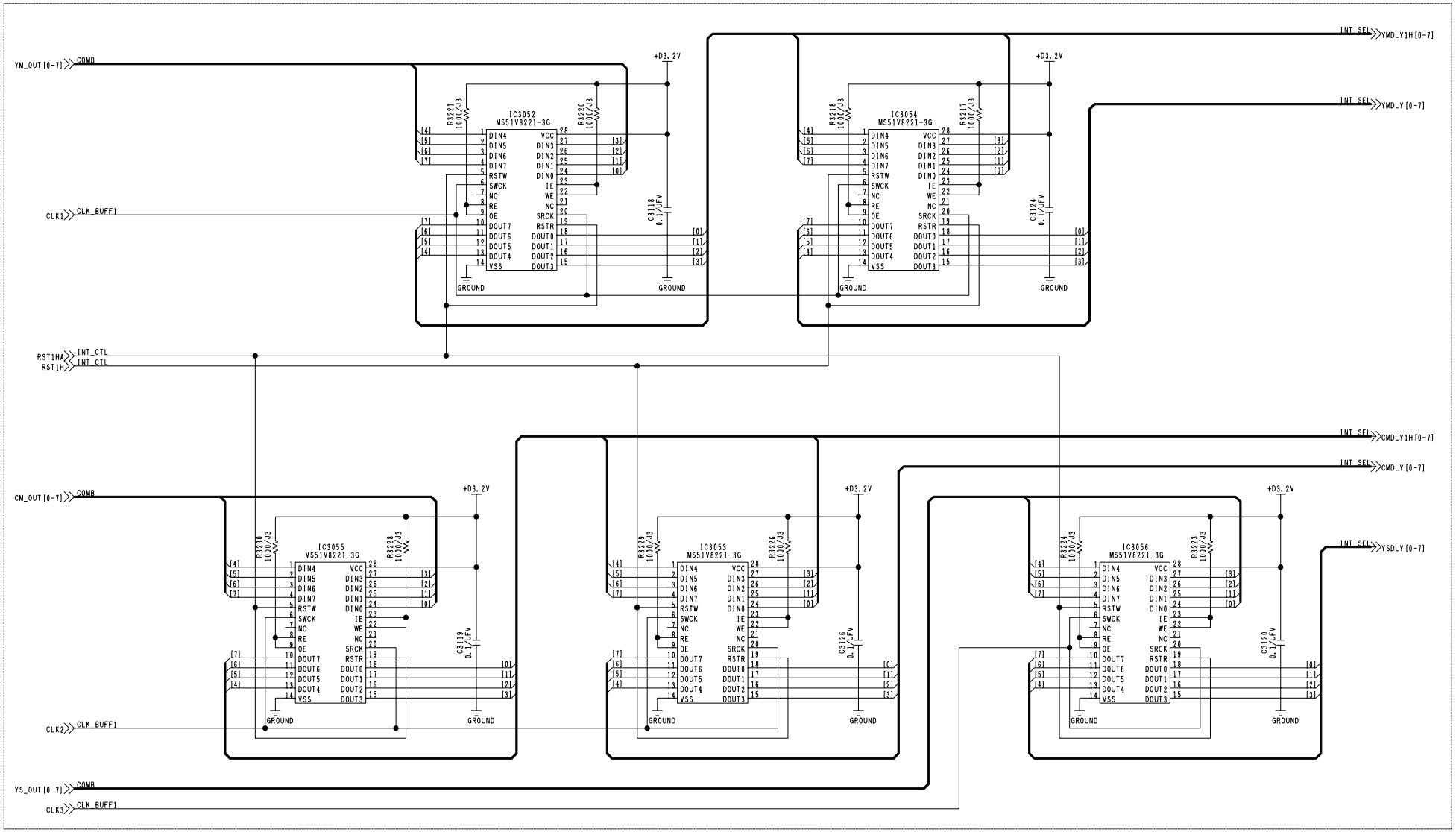

COMPONENT NAME	F5:V OUT (INT_FIFO)	16/40
CIRCUIT BOARD NO.	DRAWING NO.	
VEP83494A-1	KR3X95 (16/40)	
	SCM068	

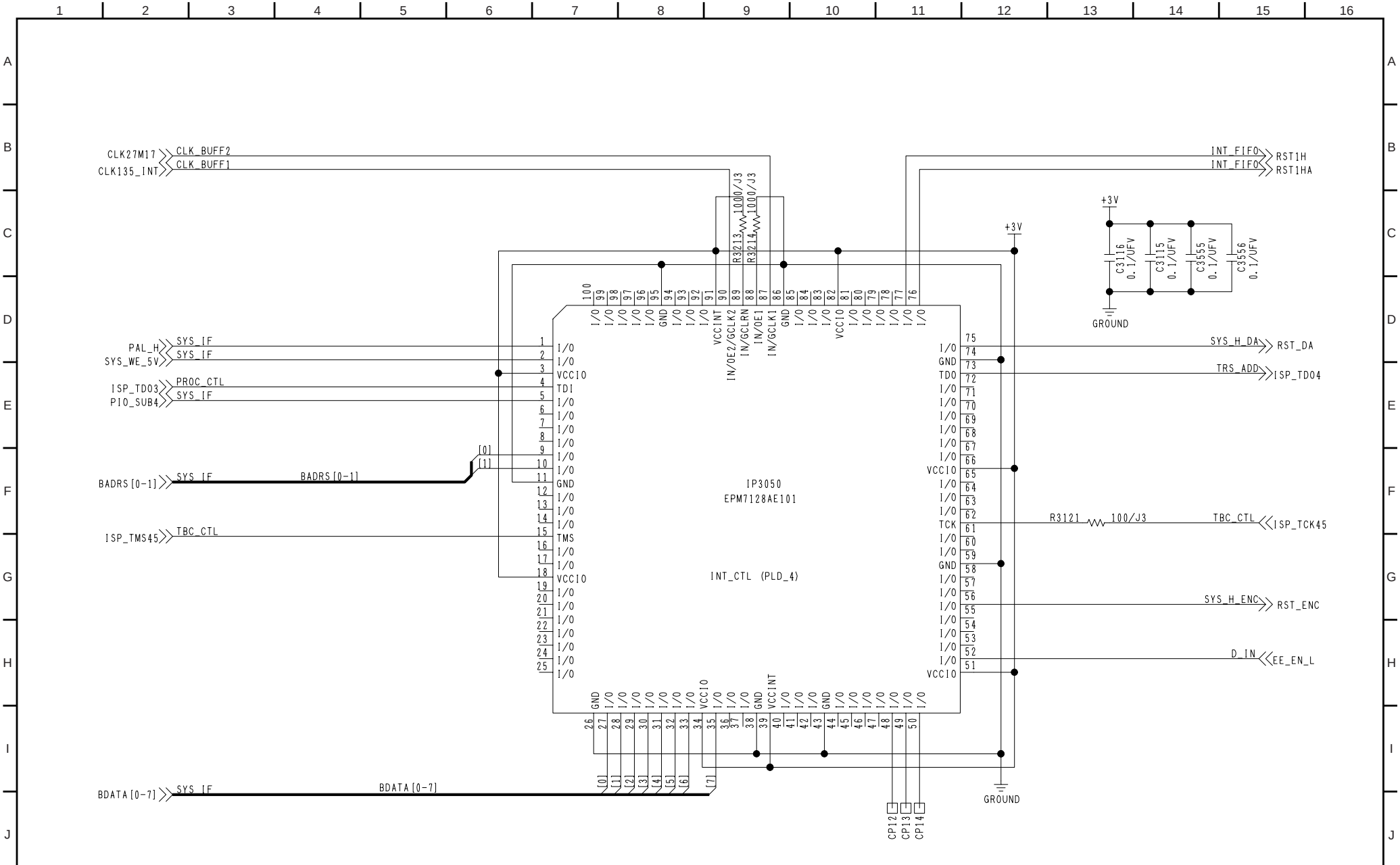

COMPONENT NAME	F5:V OUT (INT_CTL)	17/40
CIRCUIT BOARD NO.		DRAWING NO.
VEP83494A-1		KR3X95 (17/40)
		SCM069

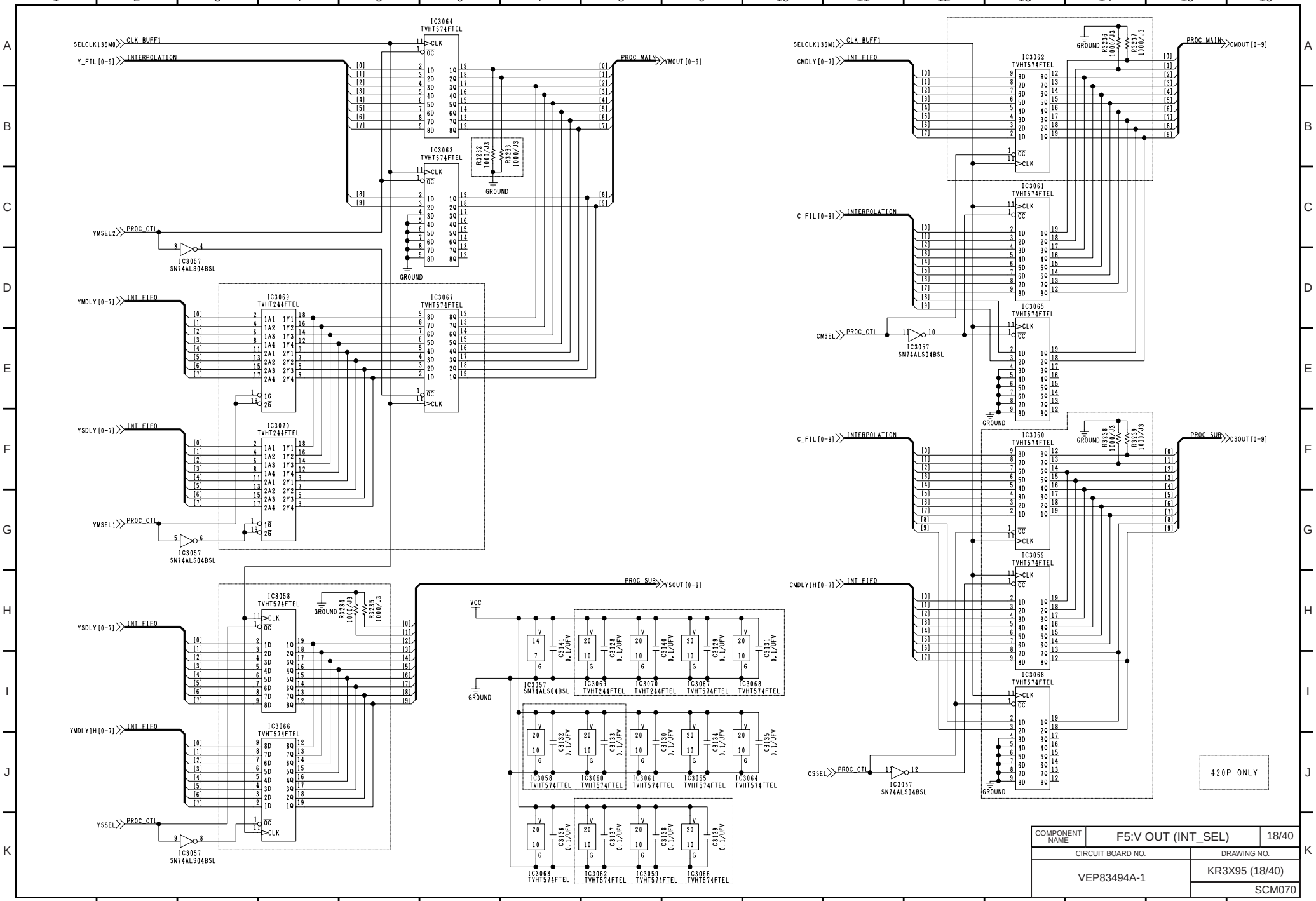

COMPONENT NAME	F5:V OUT (INT_SEL)	18/40
CIRCUIT BOARD NO.	DRAWING NO.	
VEP83494A-1	KR3X95 (18/40)	
	SCM070	

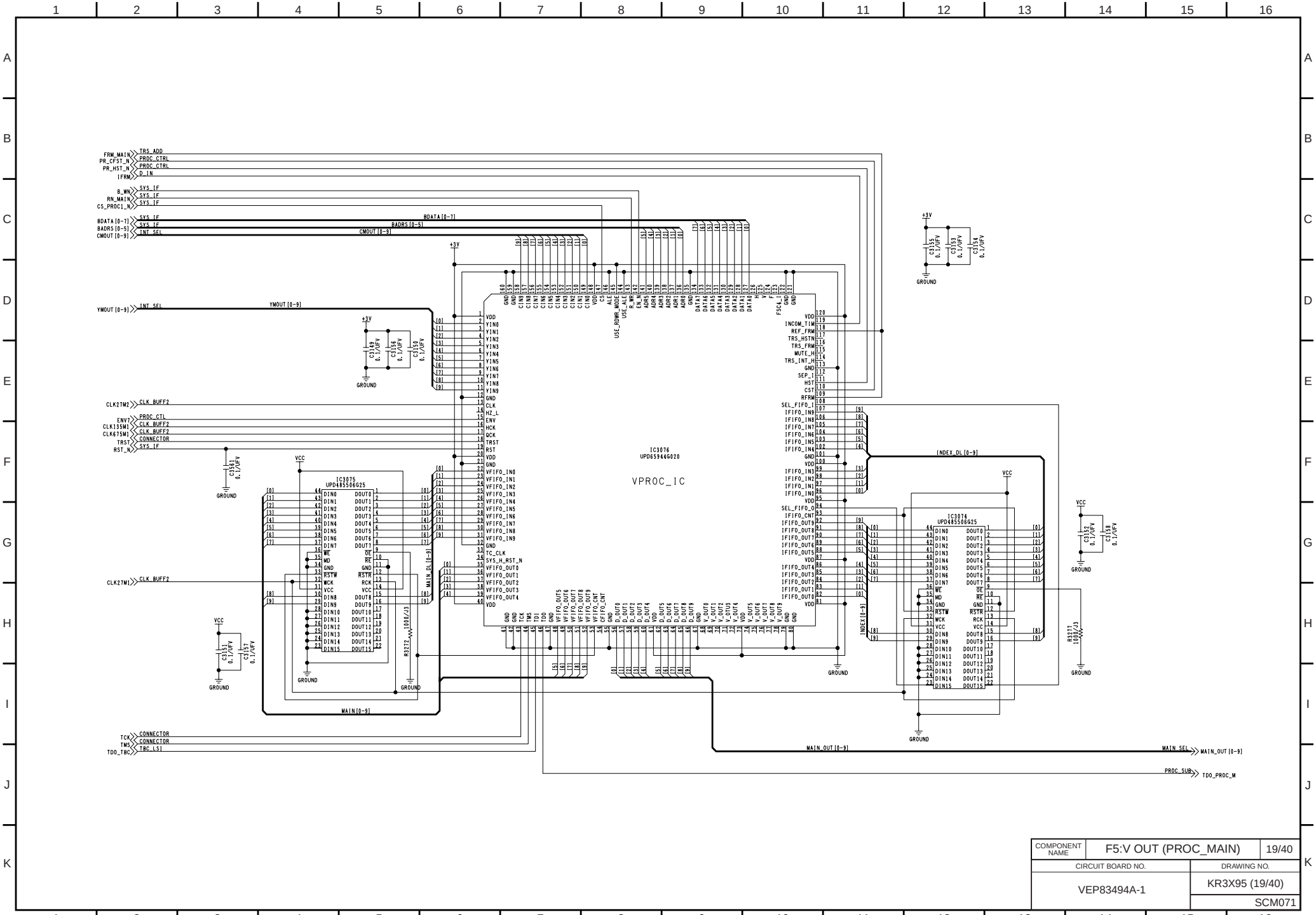

COMPONENT NAME	F5:V OUT (PROC_MAIN)	19/40
CIRCUIT BOARD NO.		DRAWING NO.
VEP83494A-1		KR3X95 (19/40)
		SCM071

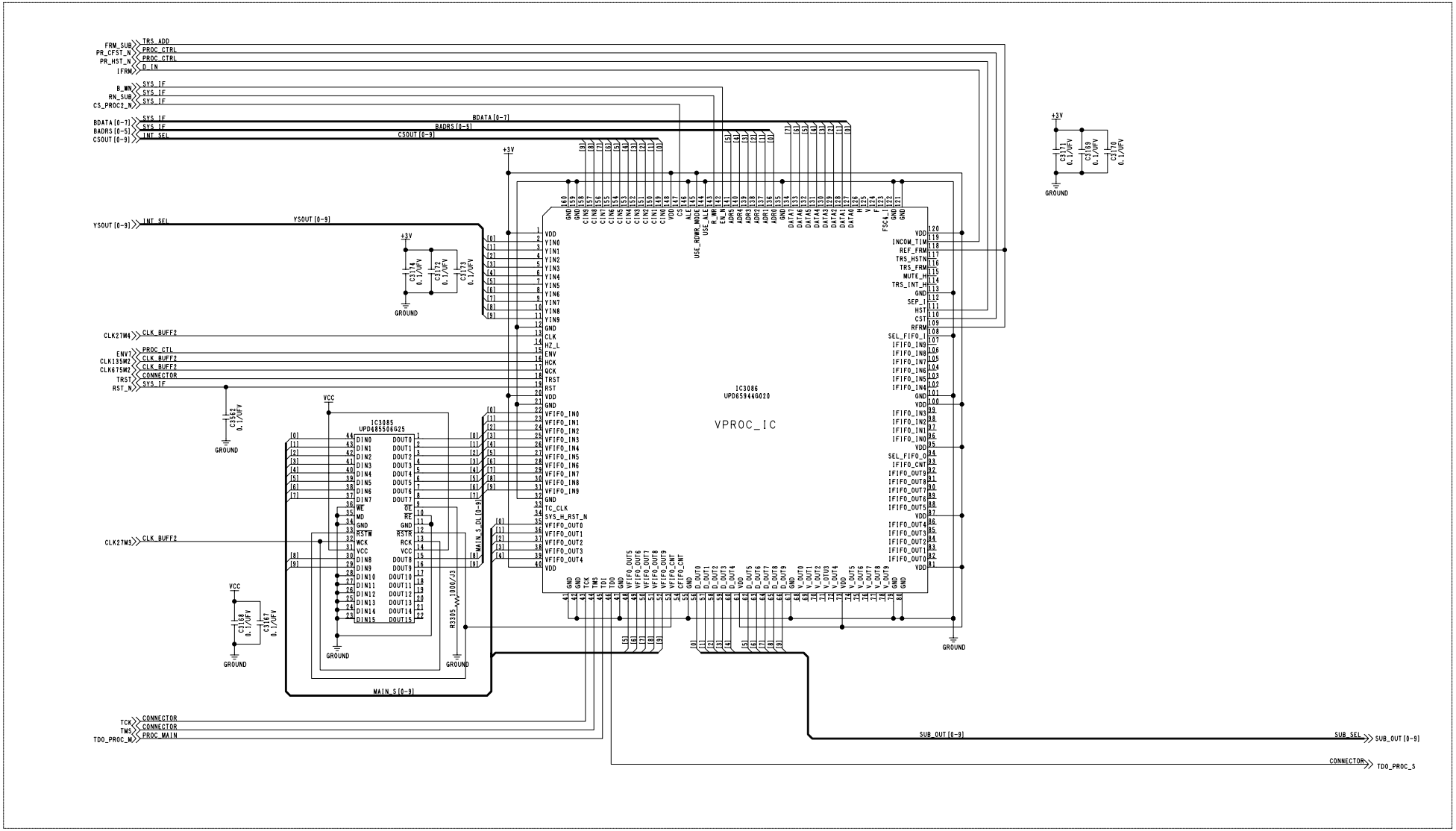

420P ONLY

COMPONENT NAME	F5:V OUT (PROC_SUB)	20/40
CIRCUIT BOARD NO.	DRAWING NO.	
VEP83494A-1	KR3X95 (20/40)	
	SCM072	

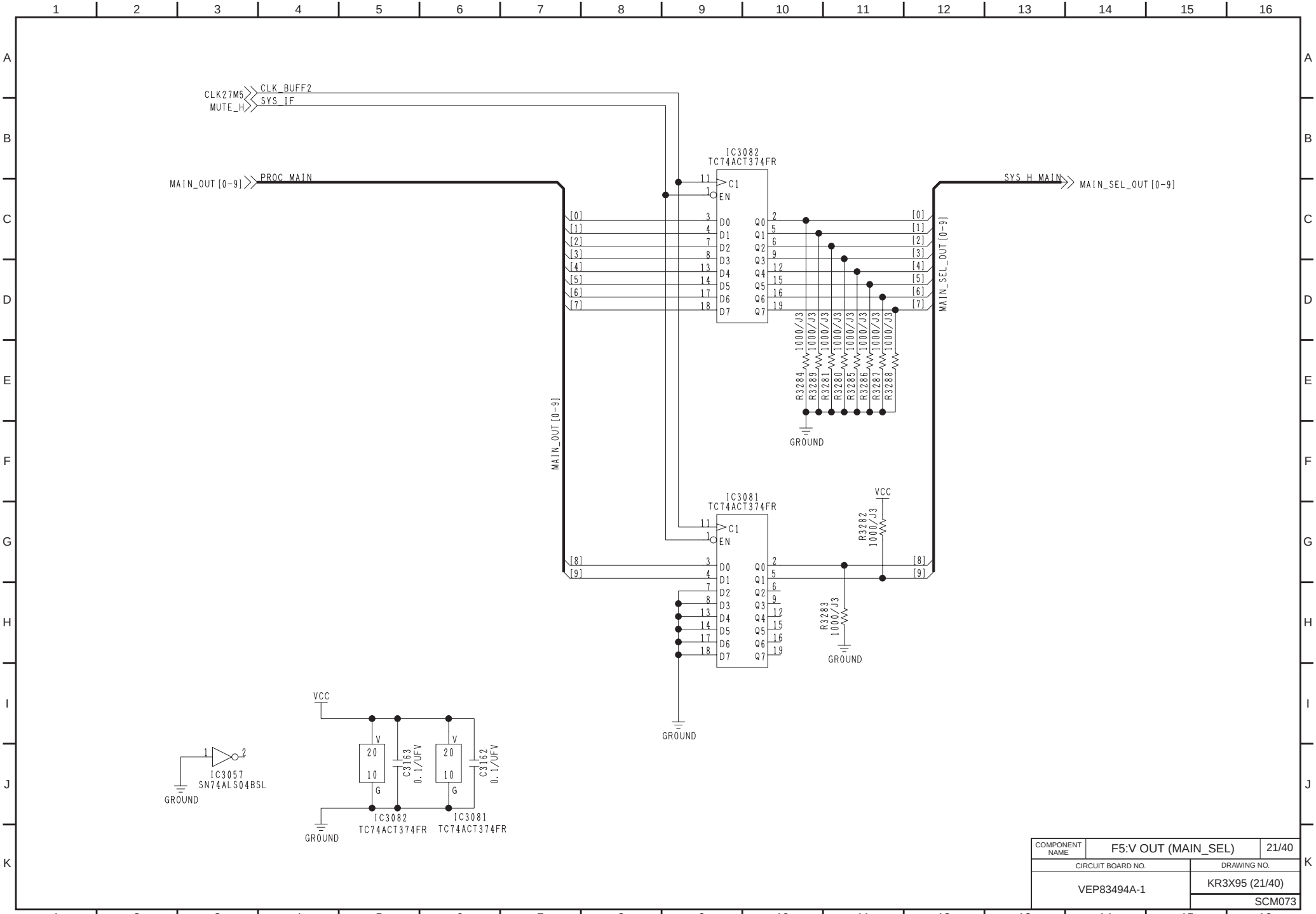

COMPONENT NAME	F5:V OUT (MAIN_SEL)	21/40
CIRCUIT BOARD NO.	DRAWING NO.	
VEP83494A-1	KR3X95 (21/40)	
	SCM073	

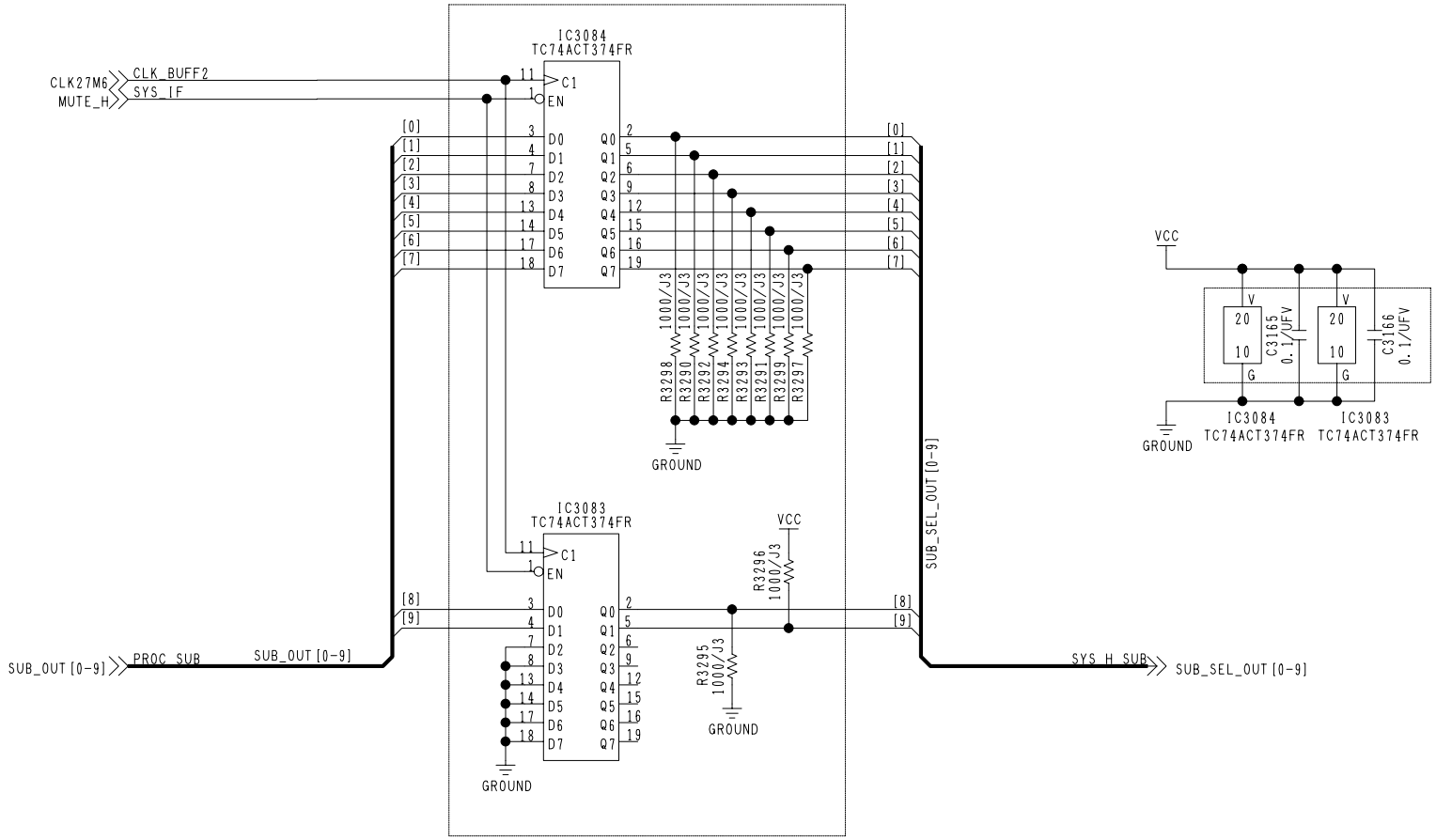

420P ONLY

COMPONENT NAME	F5:V OUT (SUB_SEL)	22/40
CIRCUIT BOARD NO.	DRAWING NO.	
VEP83494A-1	KR3X95 (22/40)	
	SCM074	

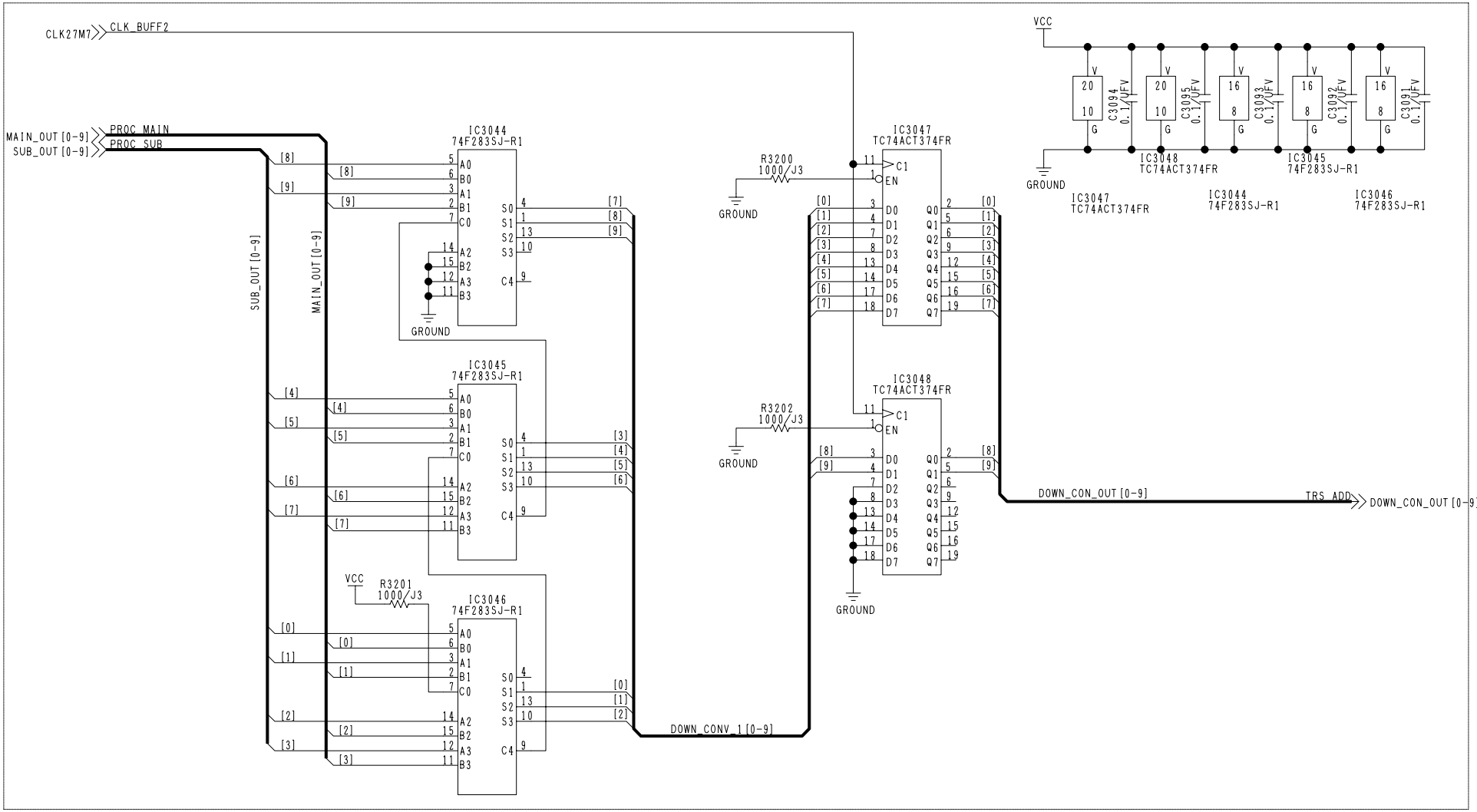

420P ONLY

COMPONENT NAME	F5:V OUT (DOWN_CON)	23/40
CIRCUIT BOARD NO.		DRAWING NO.
VEP83494A-1		KR3X95 (23/40)
		SCM075

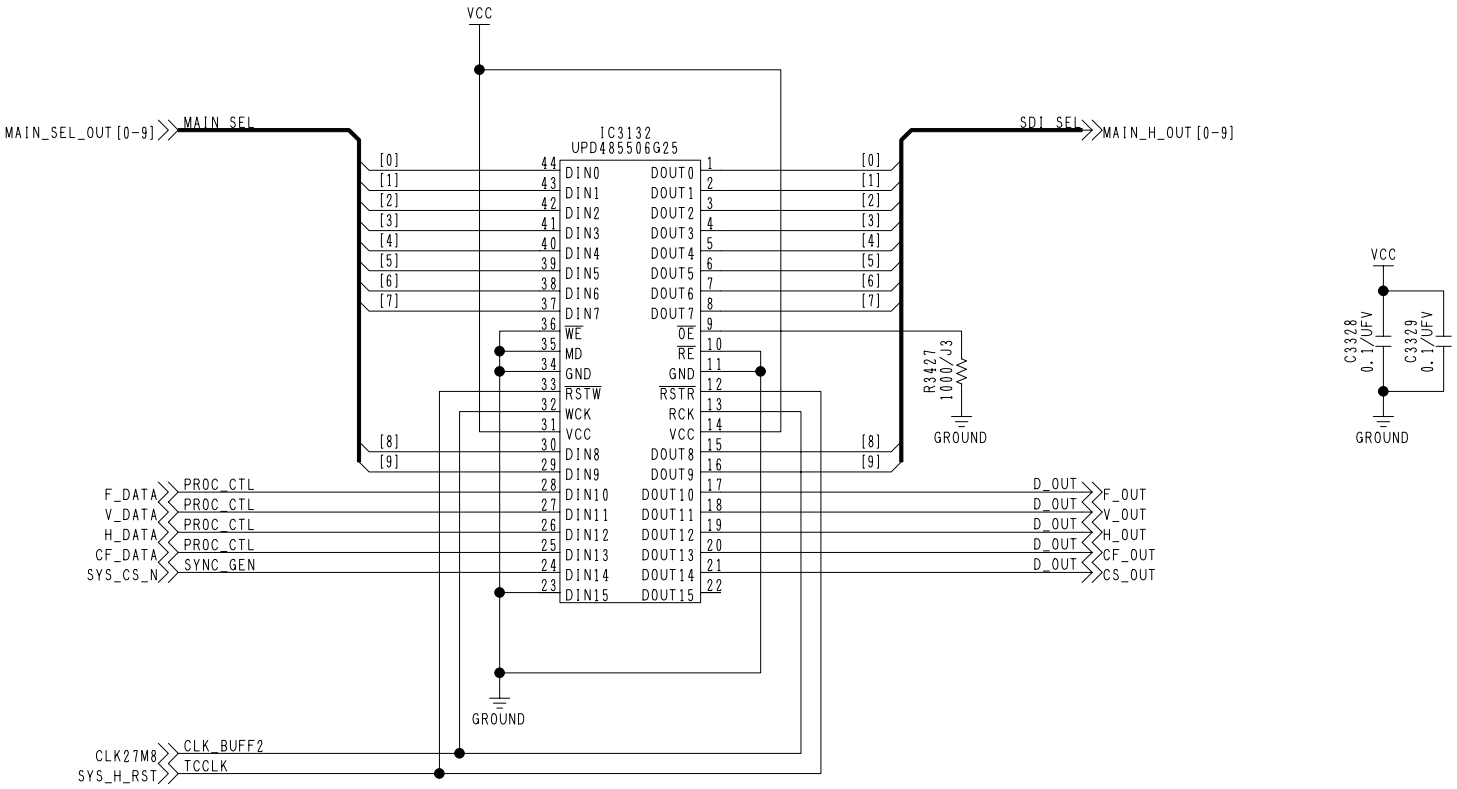

COMPONENT NAME	F5:V OUT (SYS_H_MAIN)	24/40
CIRCUIT BOARD NO.	DRAWING NO.	
VEP83494A-1	KR3X95 (24/40)	
	SCM076	

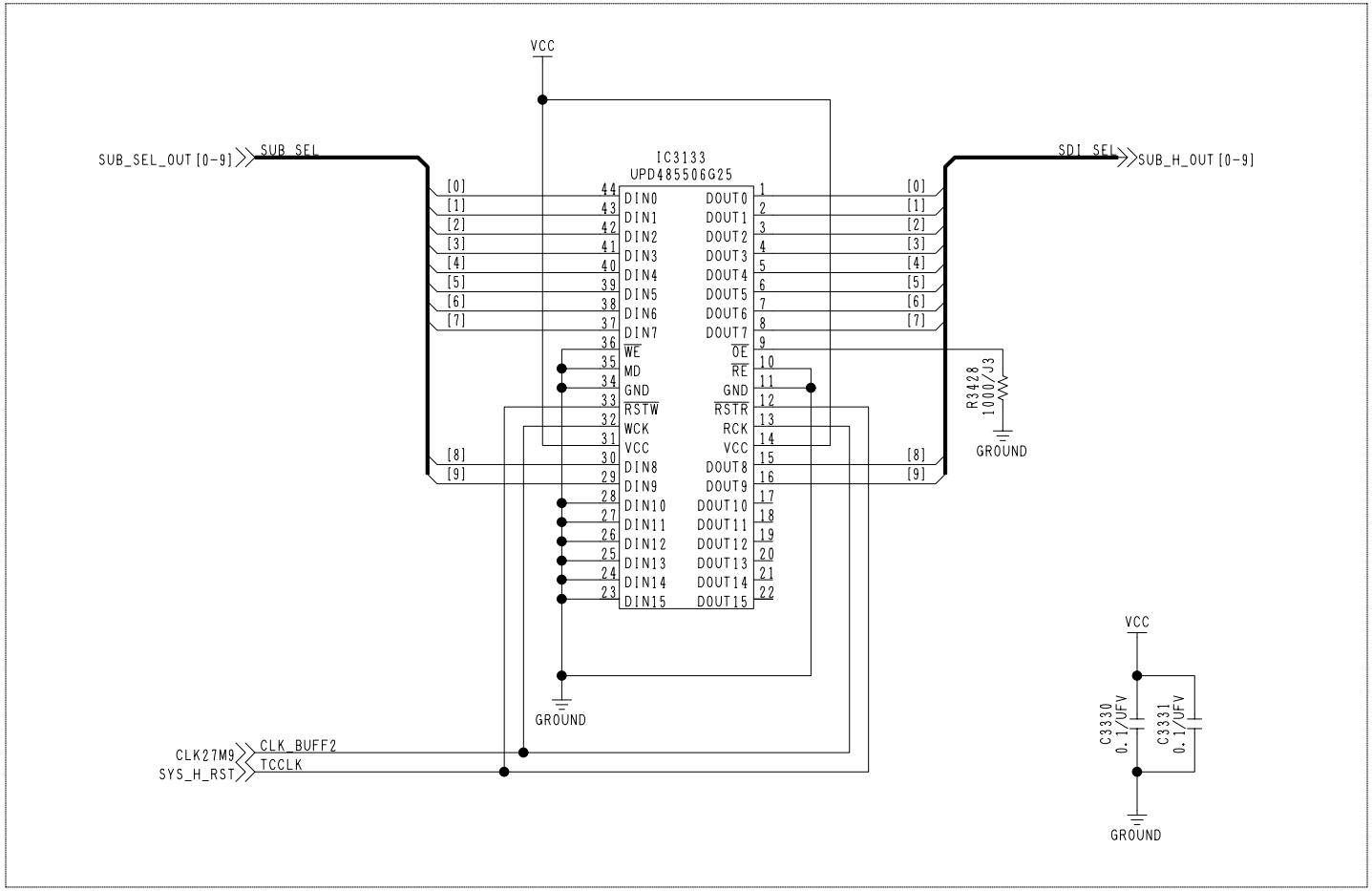

420P ONLY

COMPONENT NAME	F5:V OUT (SYS_H_SUB)	25/40
CIRCUIT BOARD NO.		DRAWING NO.
VEP83494A-1		KR3X95 (25/40)
		SCM077

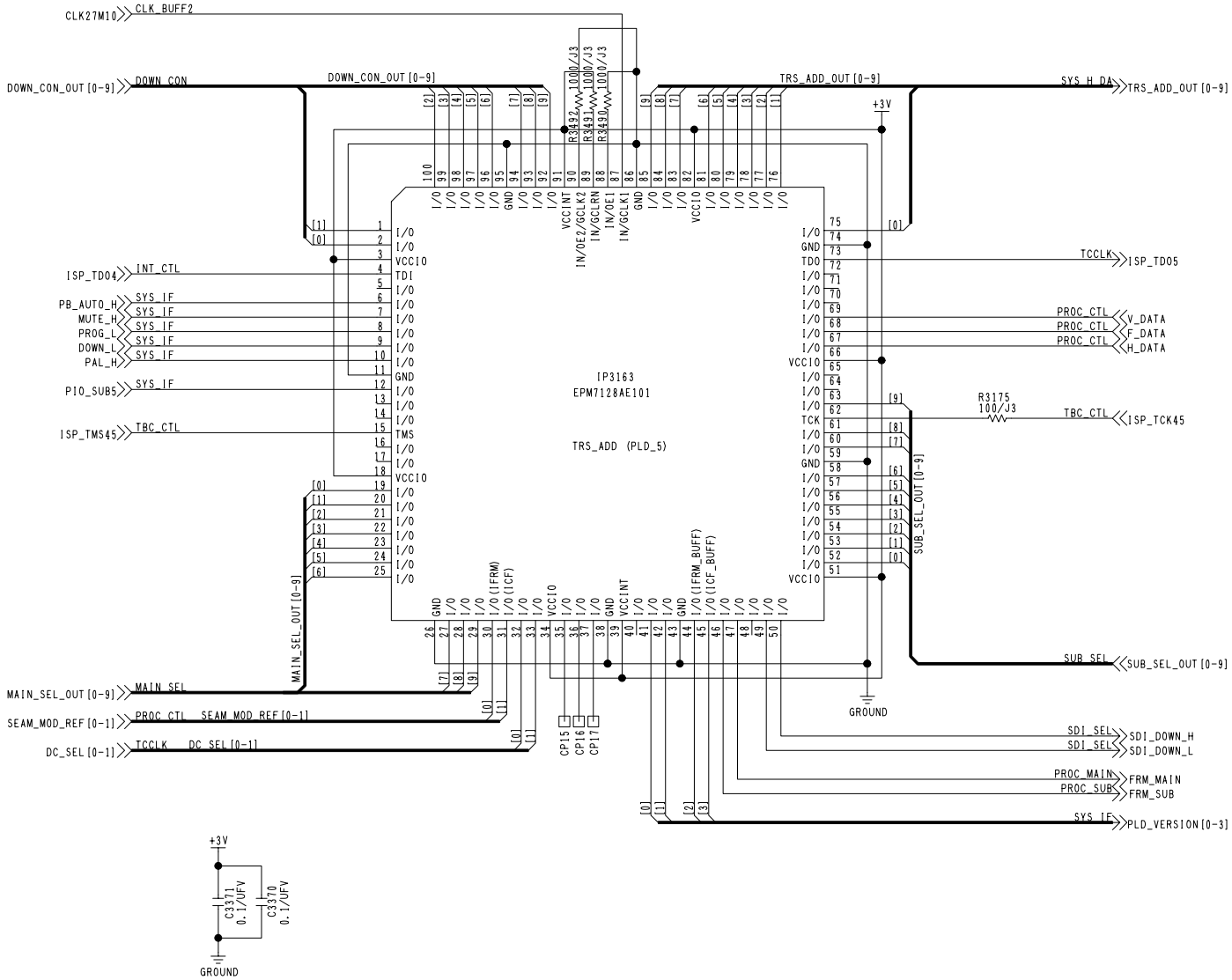

COMPONENT NAME	F5:V OUT (TRS_ADD)	26/40
CIRCUIT BOARD NO.	DRAWING NO.	
VEP83494A-1	KR3X95 (26/40)	
	SCM078	

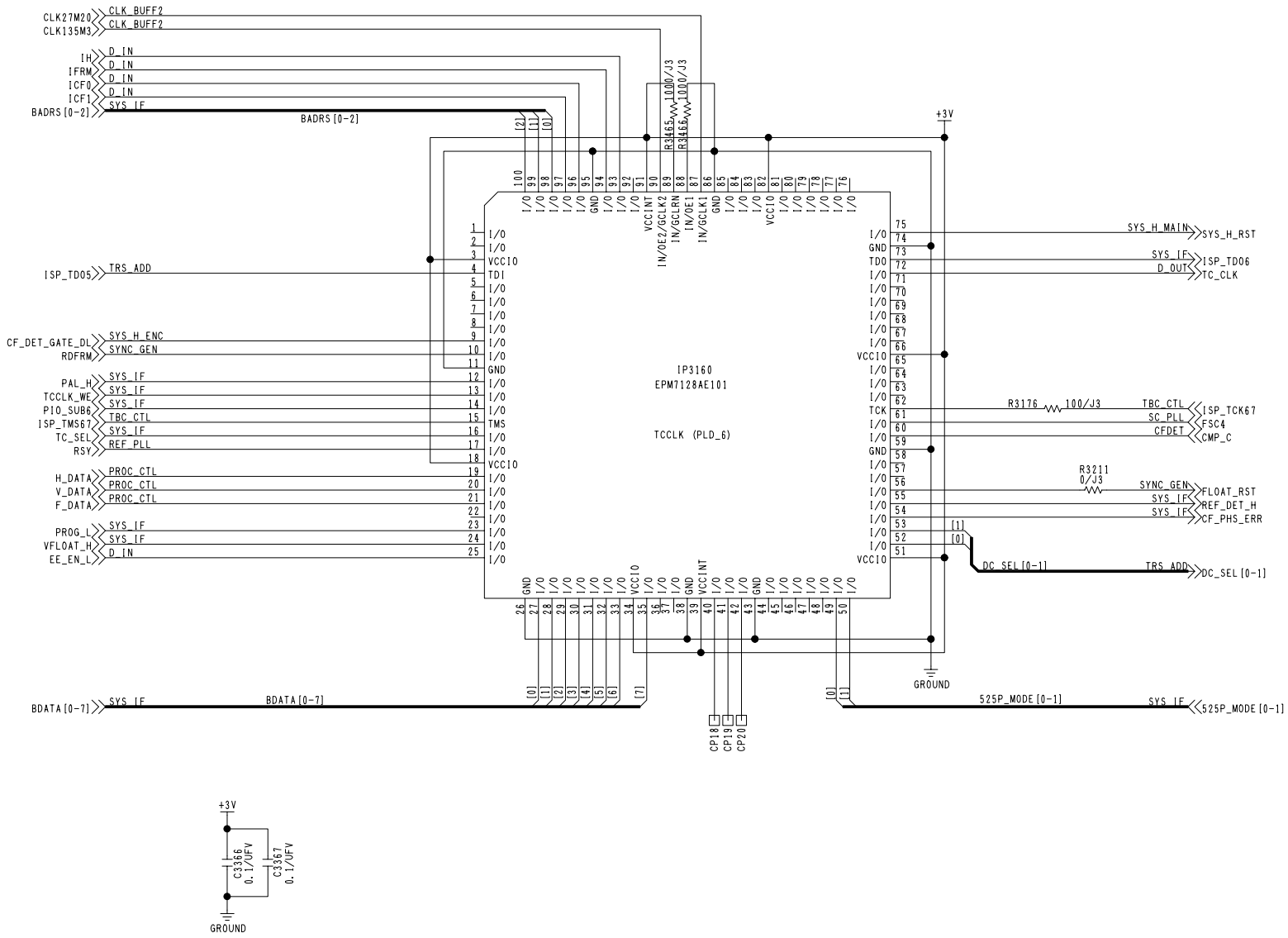

COMPONENT NAME	F5:V OUT (TCCLK)	27/40
CIRCUIT BOARD NO.	DRAWING NO.	
VEP83494A-1	KR3X95 (27/40)	
	SCM079	

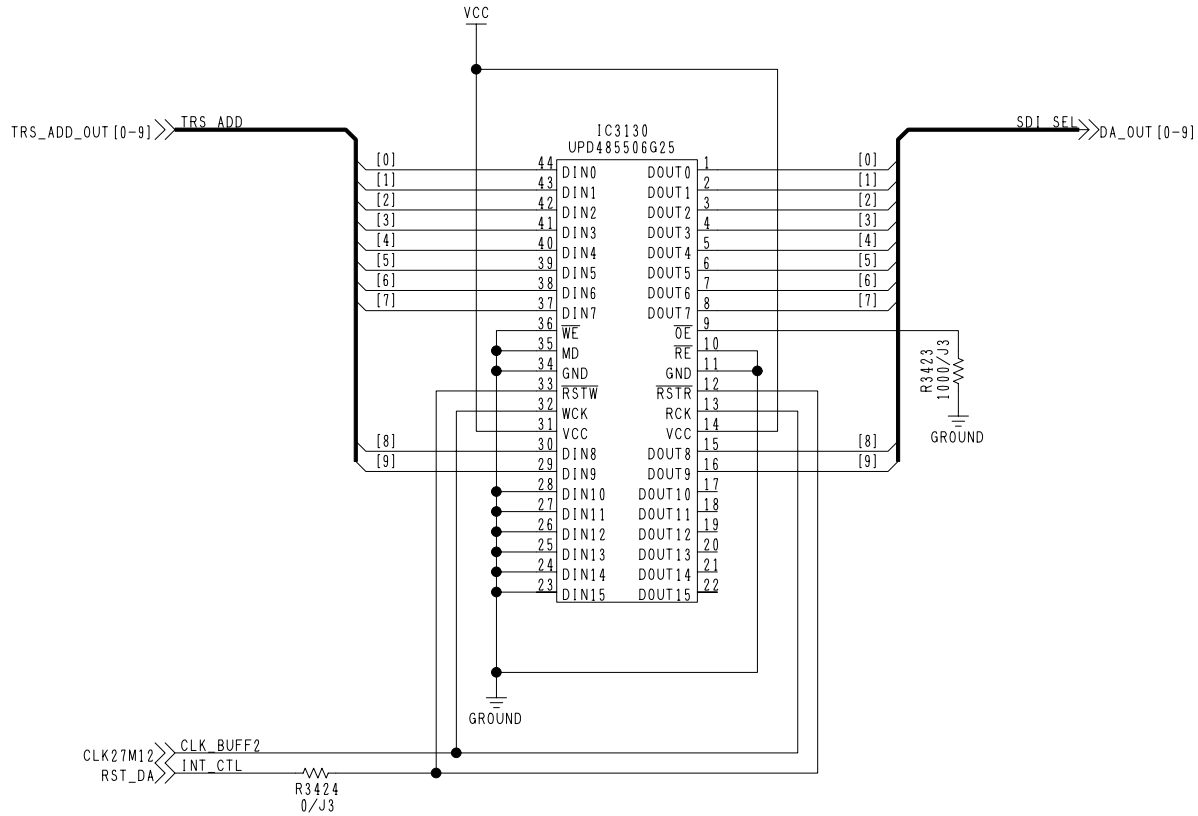

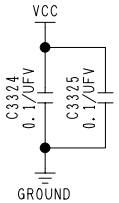

COMPONENT NAME	F5:V OUT (SYS_H_DA)	28/40
CIRCUIT BOARD NO.	DRAWING NO.	
VEP83494A-1	KR3X95 (28/40)	
	SCM080	

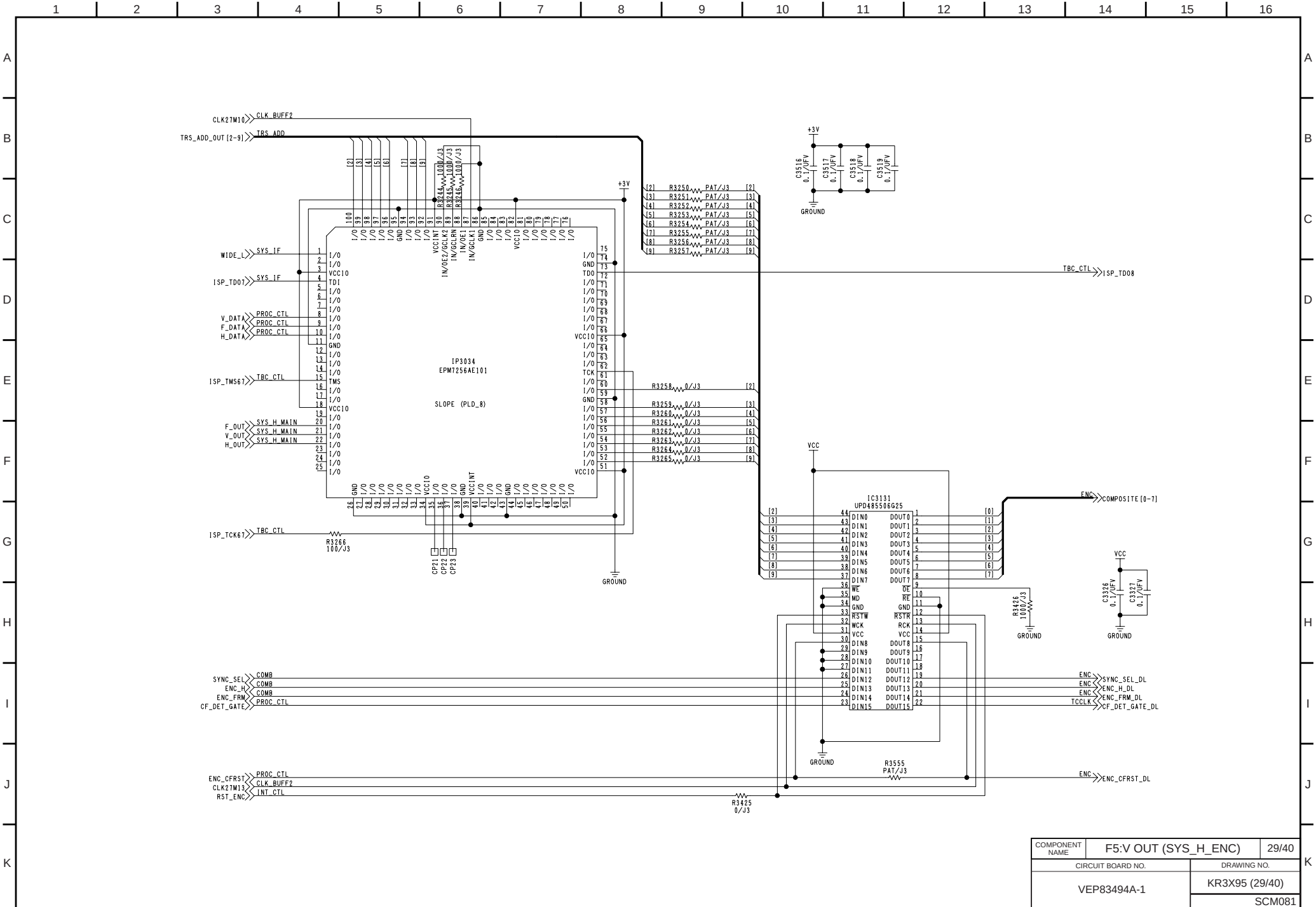

COMPONENT NAME	F5:V OUT (SYS_H_ENC)	29/40
CIRCUIT BOARD NO.	DRAWING NO.	
VEP83494A-1	KR3X95 (29/40)	
	SCM081	

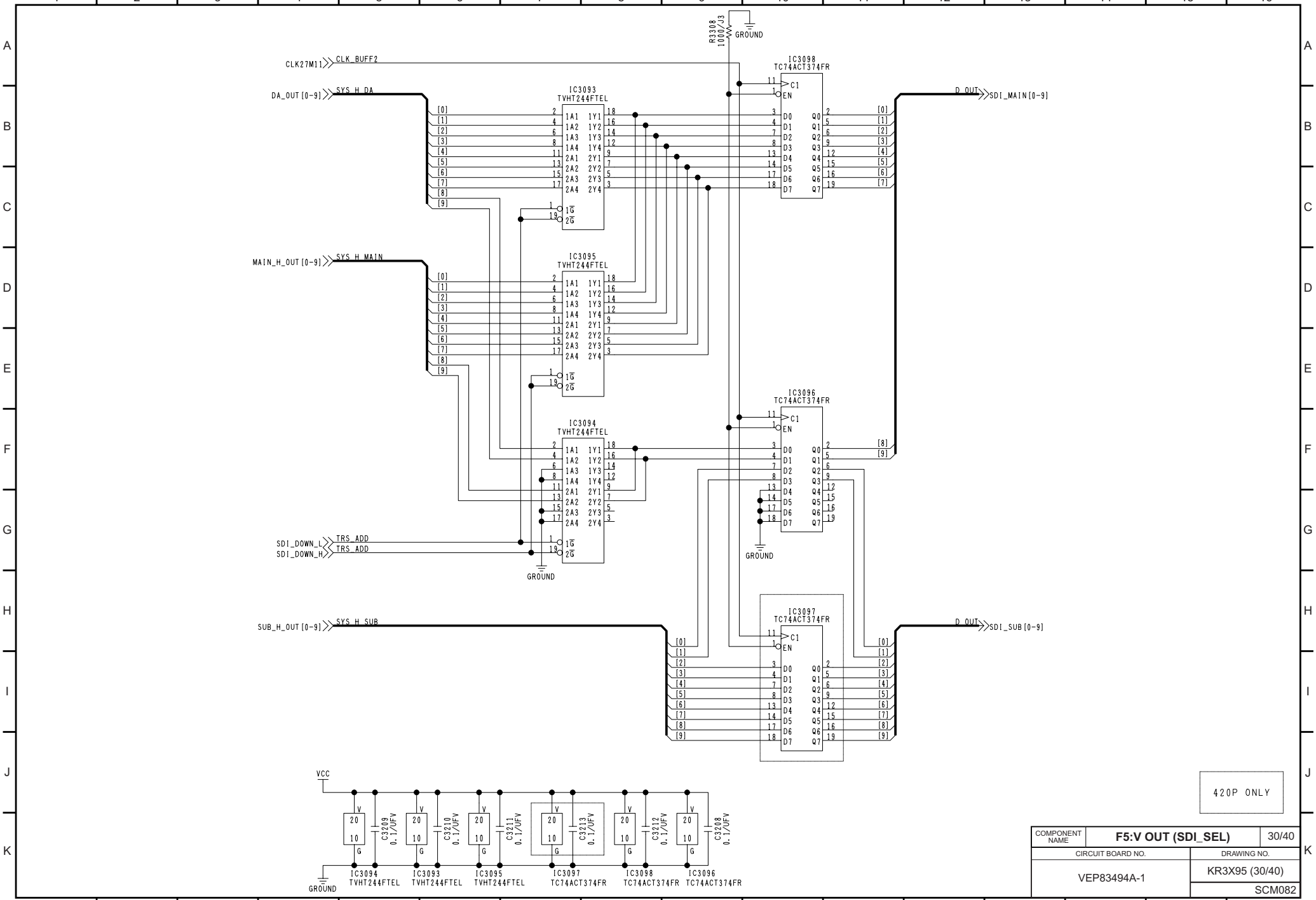

COMPONENT NAME	F5:V OUT (SDI_SEL)	30/40
CIRCUIT BOARD NO.	DRAWING NO.	
VEP83494A-1	KR3X95 (30/40)	
	SCM082	

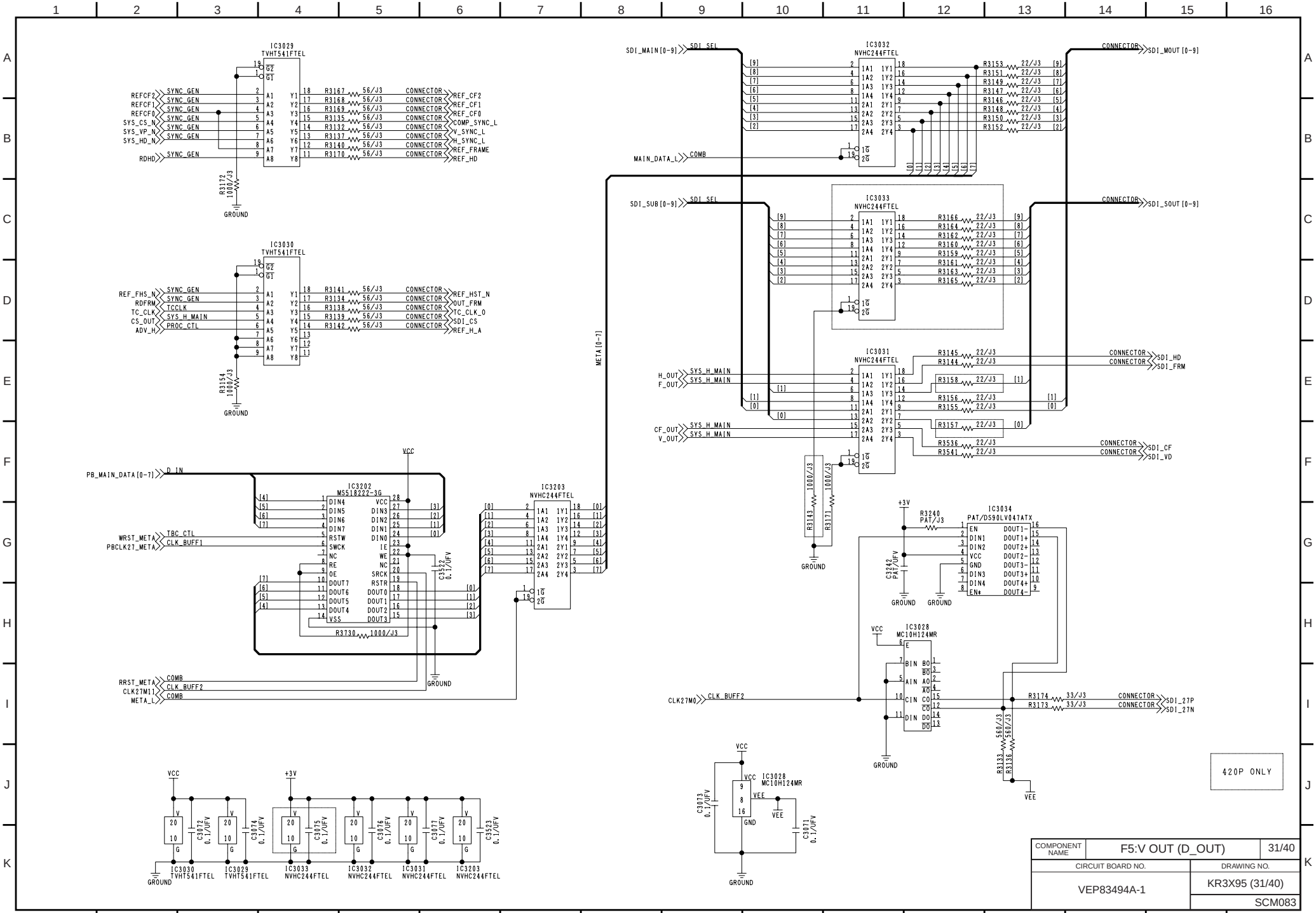

COMPONENT NAME	F5:V OUT (D_OUT)	31/40
CIRCUIT BOARD NO.		DRAWING NO.
VEP83494A-1		KR3X95 (31/40)
		SCM083

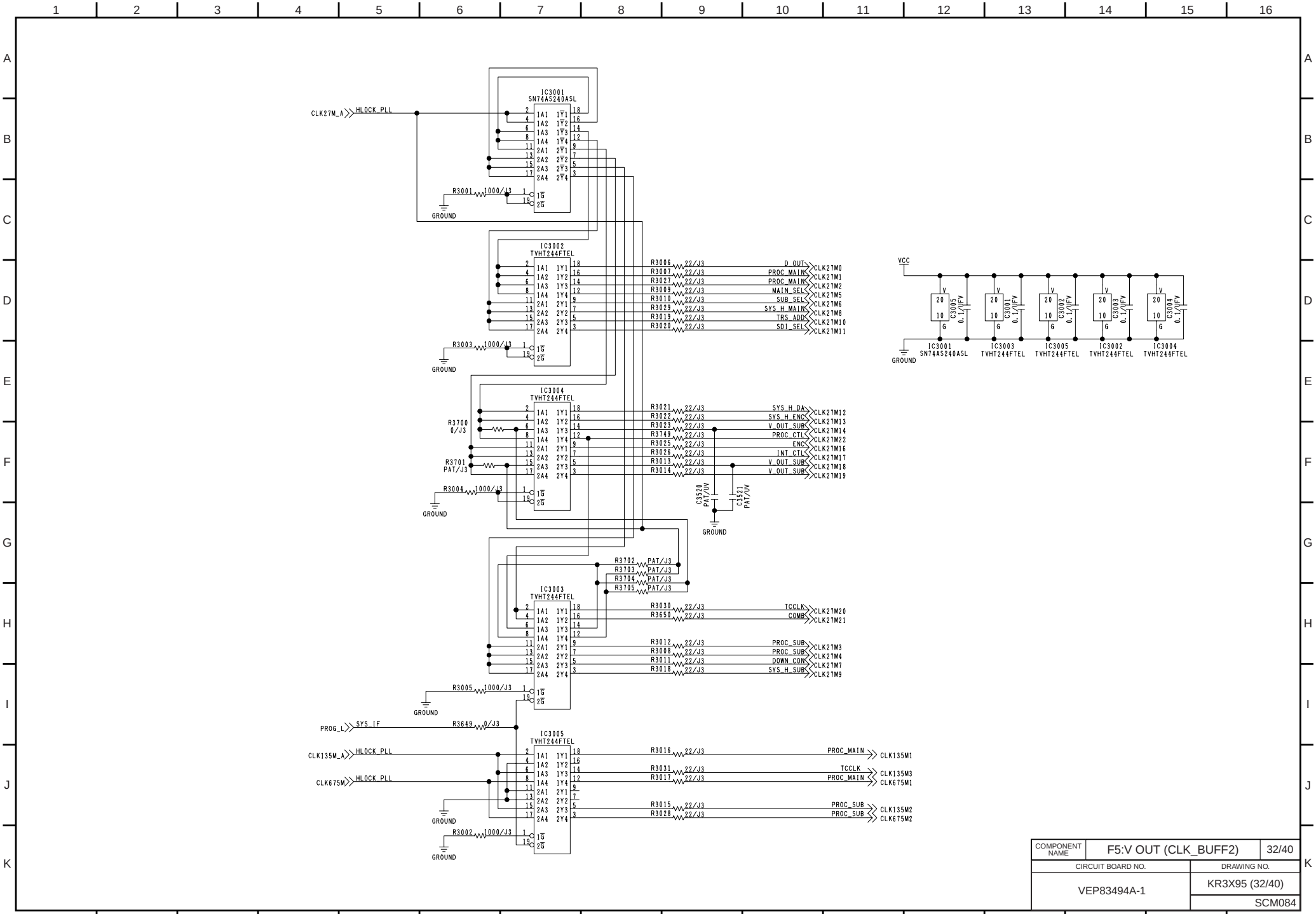

COMPONENT NAME	F5:V OUT (CLK_BUFF2)	32/40
CIRCUIT BOARD NO.	DRAWING NO.	
VEP83494A-1	KR3X95 (32/40)	
	SCM084	

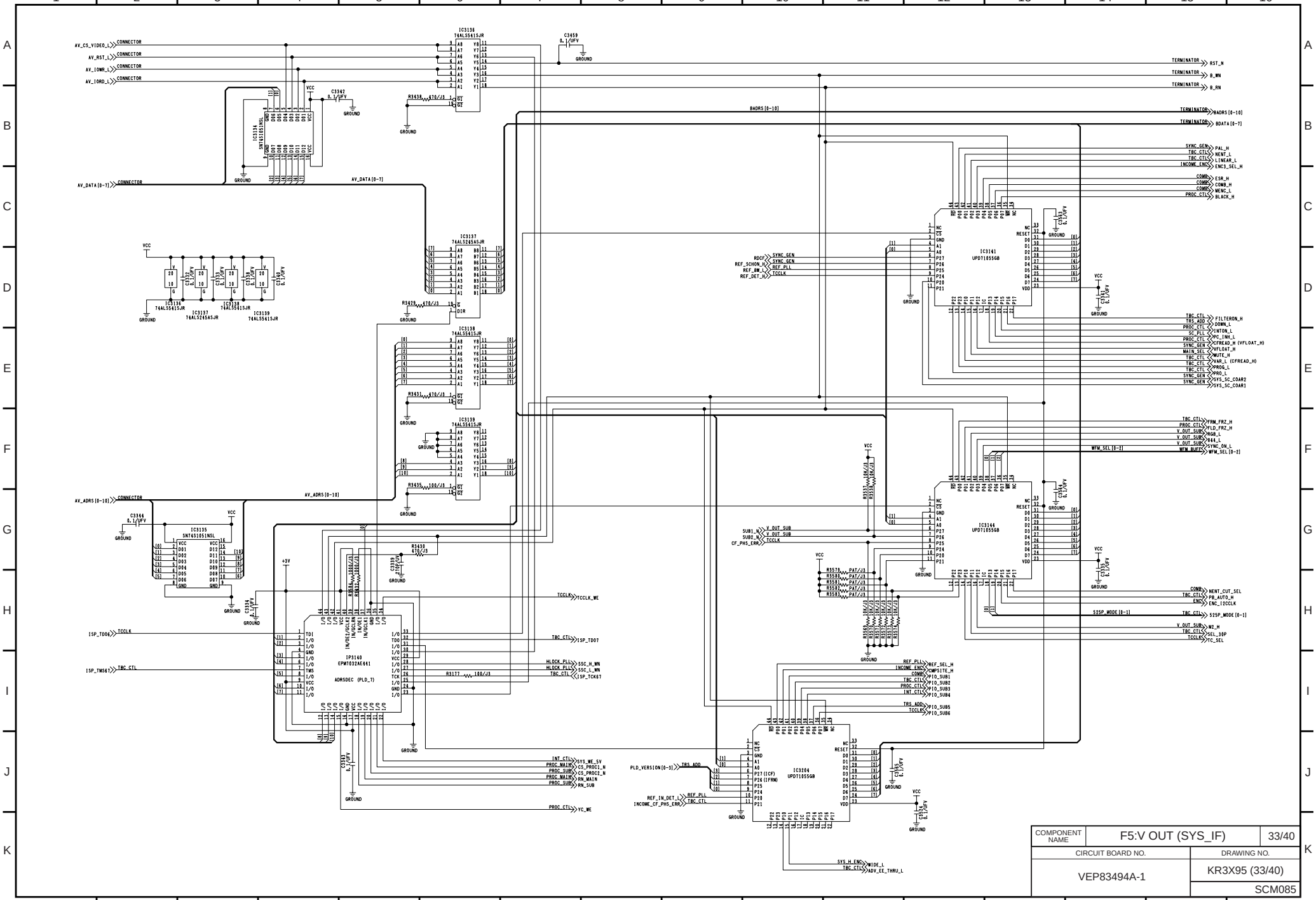

COMPONENT NAME	F5:V OUT (SYS_IF)	33/40
CIRCUIT BOARD NO.		DRAWING NO.
VEP83494A-1		KR3X95 (33/40)
		SCM085

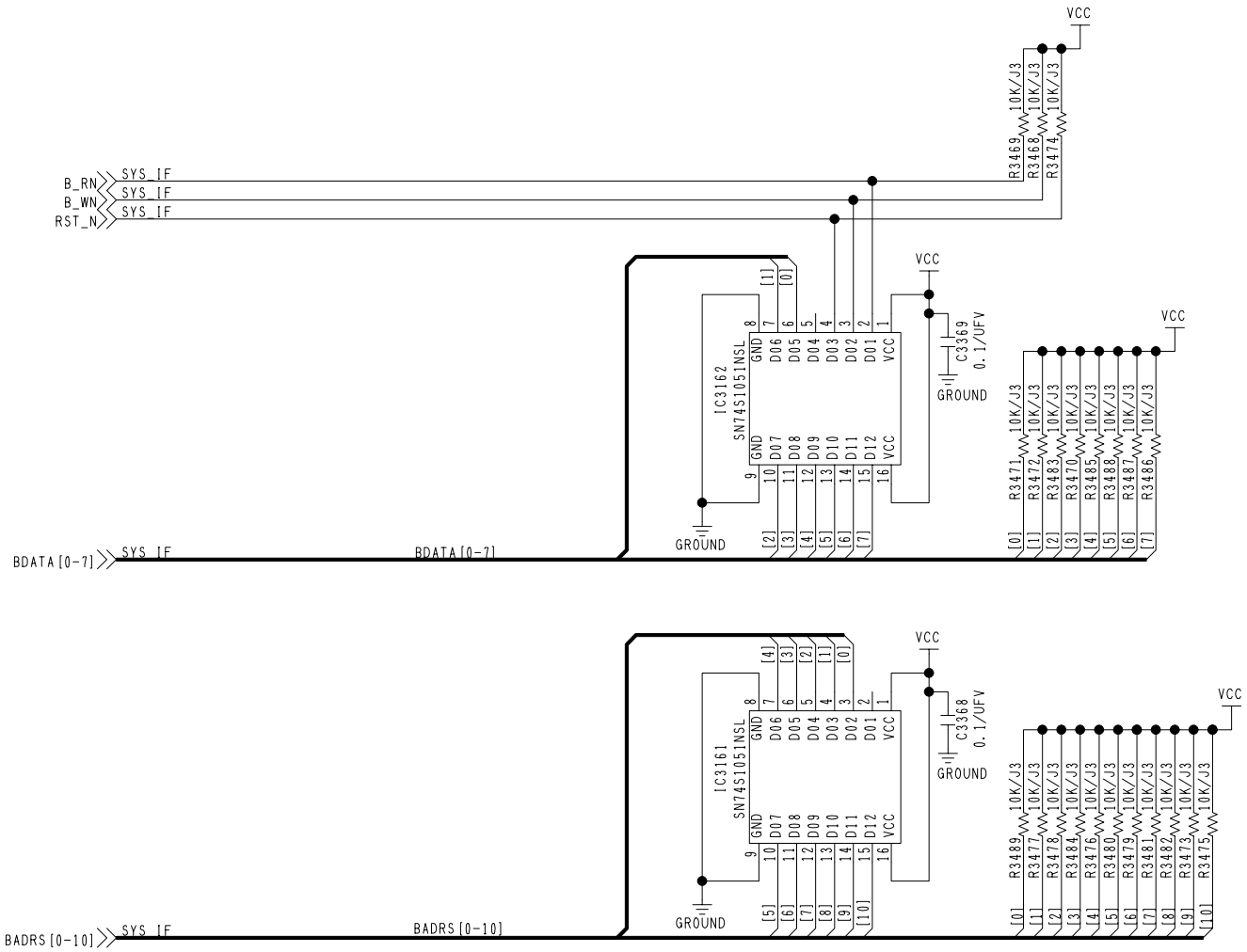

COMPONENT NAME	F5:V OUT (TERMINATOR)	34/40
CIRCUIT BOARD NO.		DRAWING NO.
VEP83494A-1		KR3X95 (34/40)
		SCM086

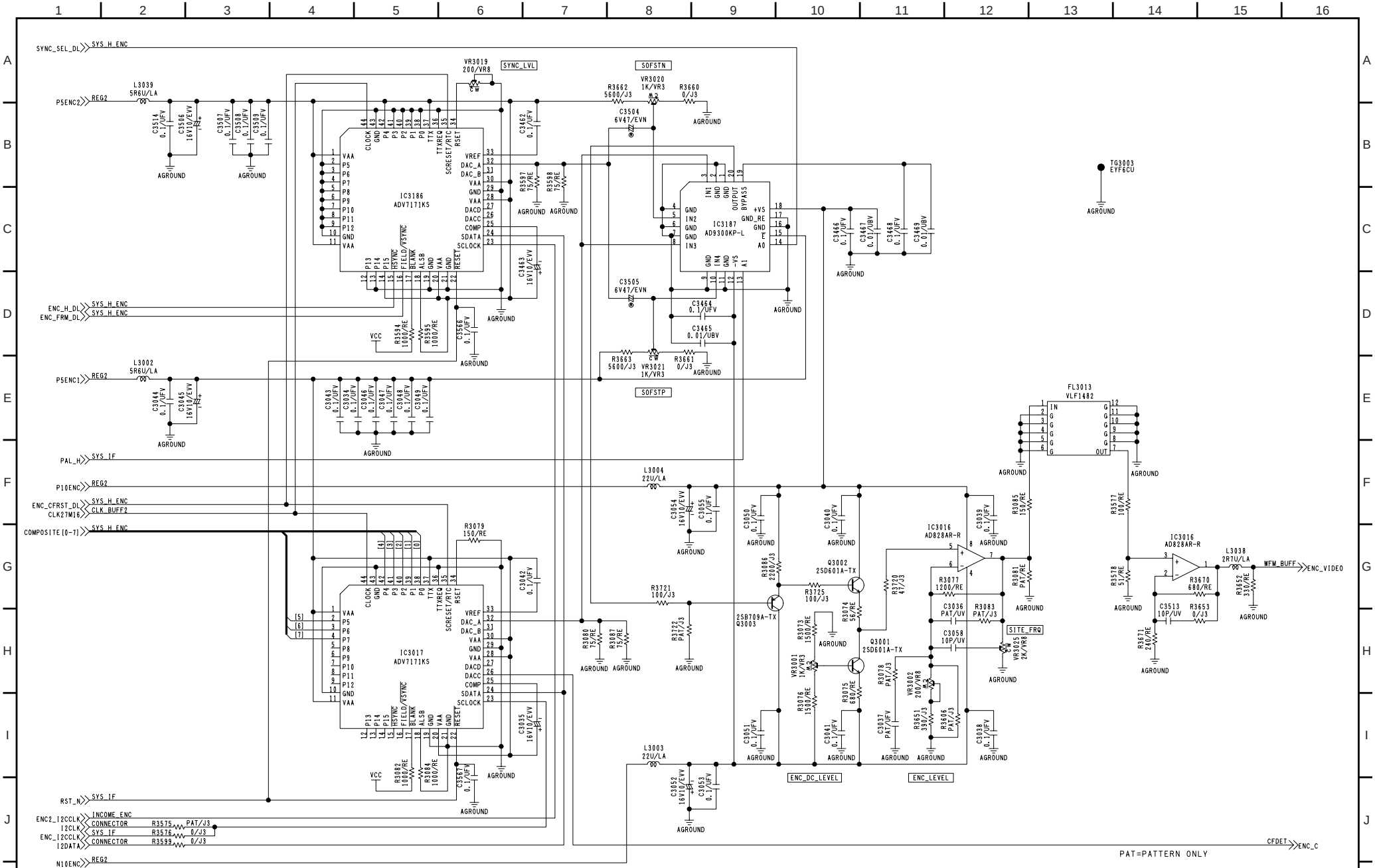

COMPONENT NAME	F5:V OUT (ENC)	35/40
CIRCUIT BOARD NO.		DRAWING NO.
VEP83494A-1		KR3X95 (35/40)
		SCM087

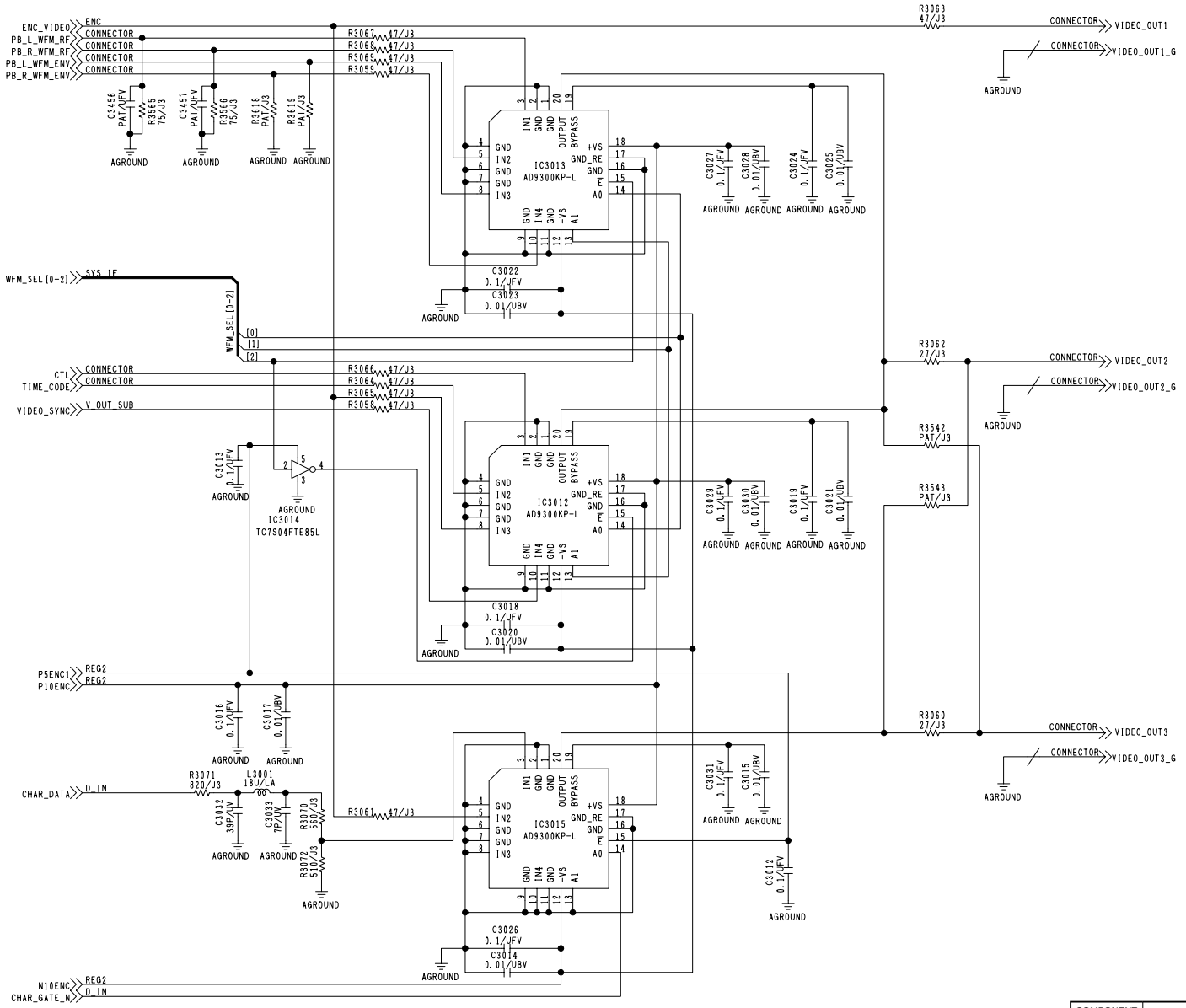

COMPONENT NAME	F5:V OUT (WFM_BUFF)	36/40
CIRCUIT BOARD NO.	DRAWING NO.	
VEP83494A-1	KR3X95 (36/40)	
	SCM088	

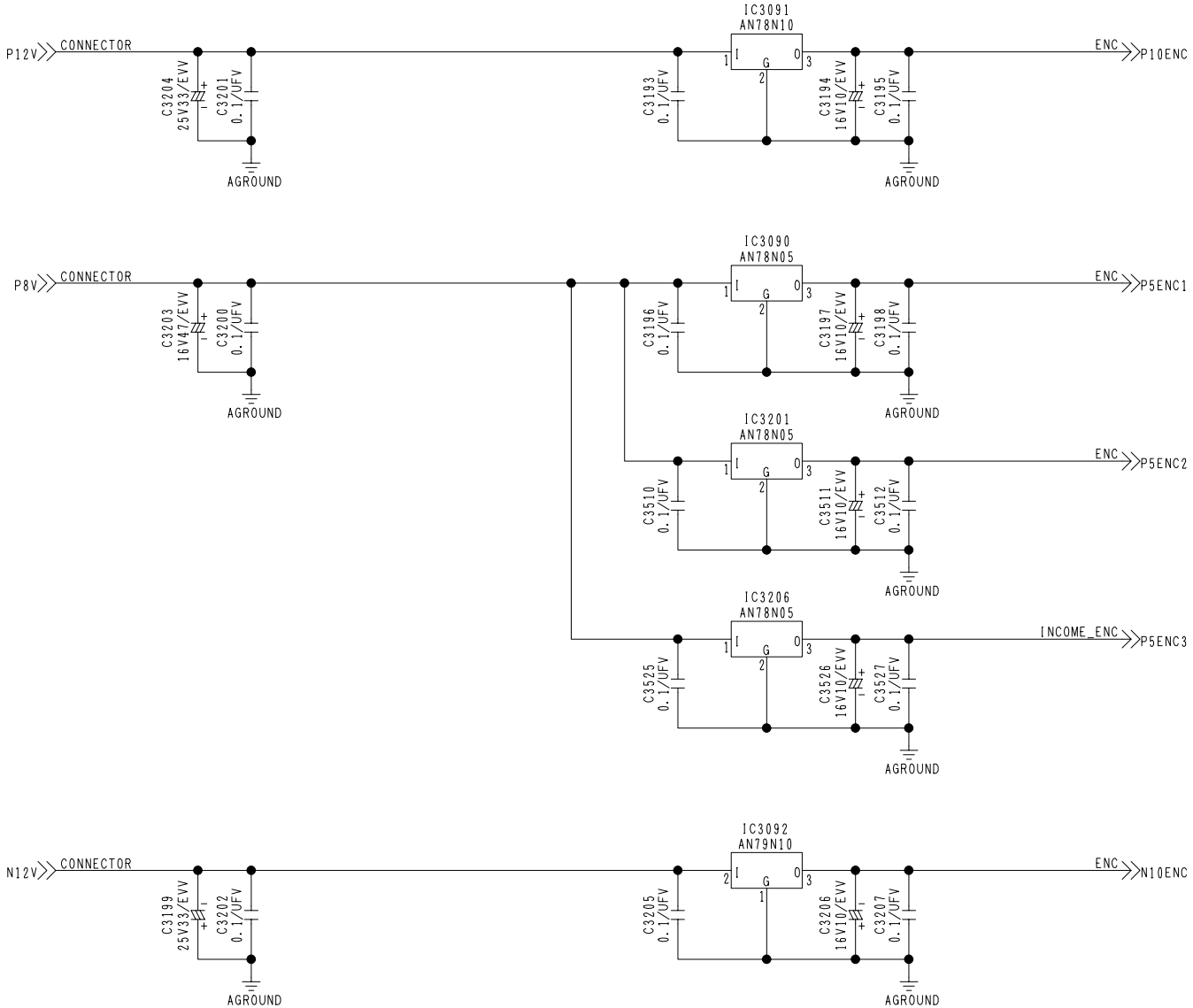

COMPONENT NAME	F5:V OUT (REG2)	37/40
CIRCUIT BOARD NO.		DRAWING NO.
VEP83494A-1		KR3X95 (37/40)
		SCM089

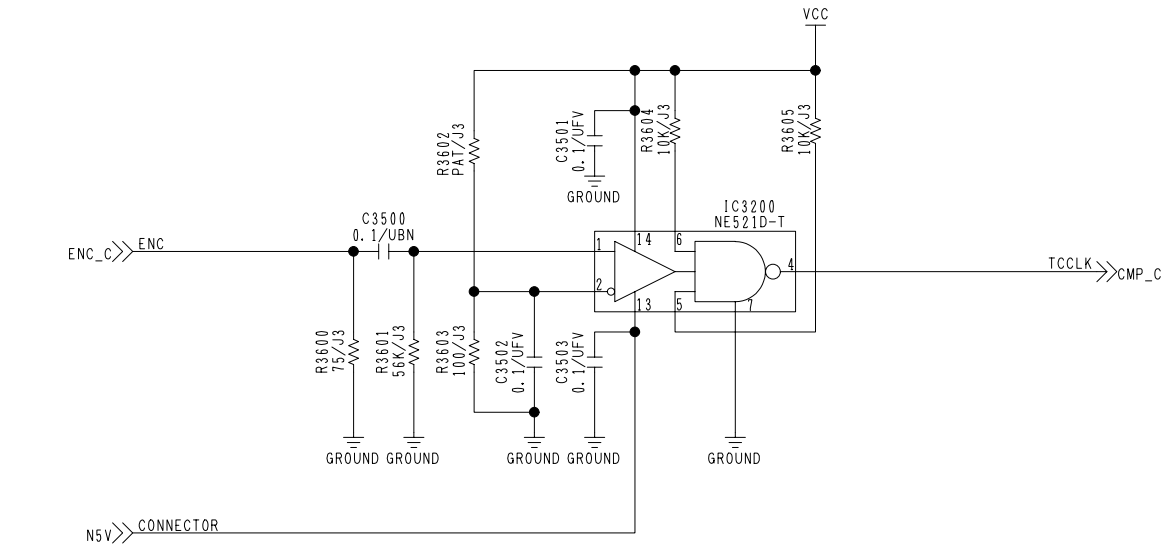

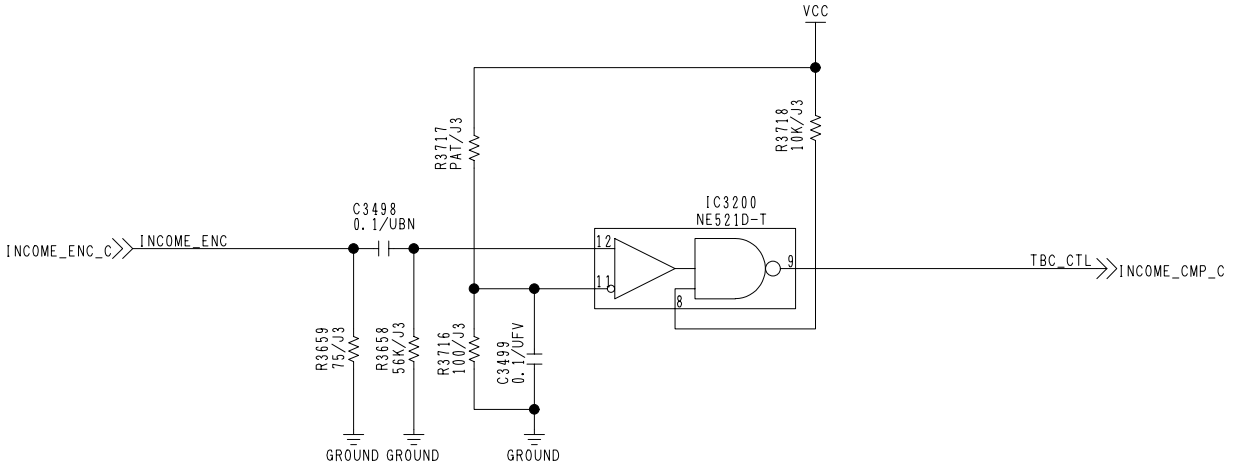

COMPONENT NAME	F5:V OUT (CFDET)	38/40
CIRCUIT BOARD NO.		DRAWING NO.
VEP83494A-1		KR3X95 (38/40)
		SCM090

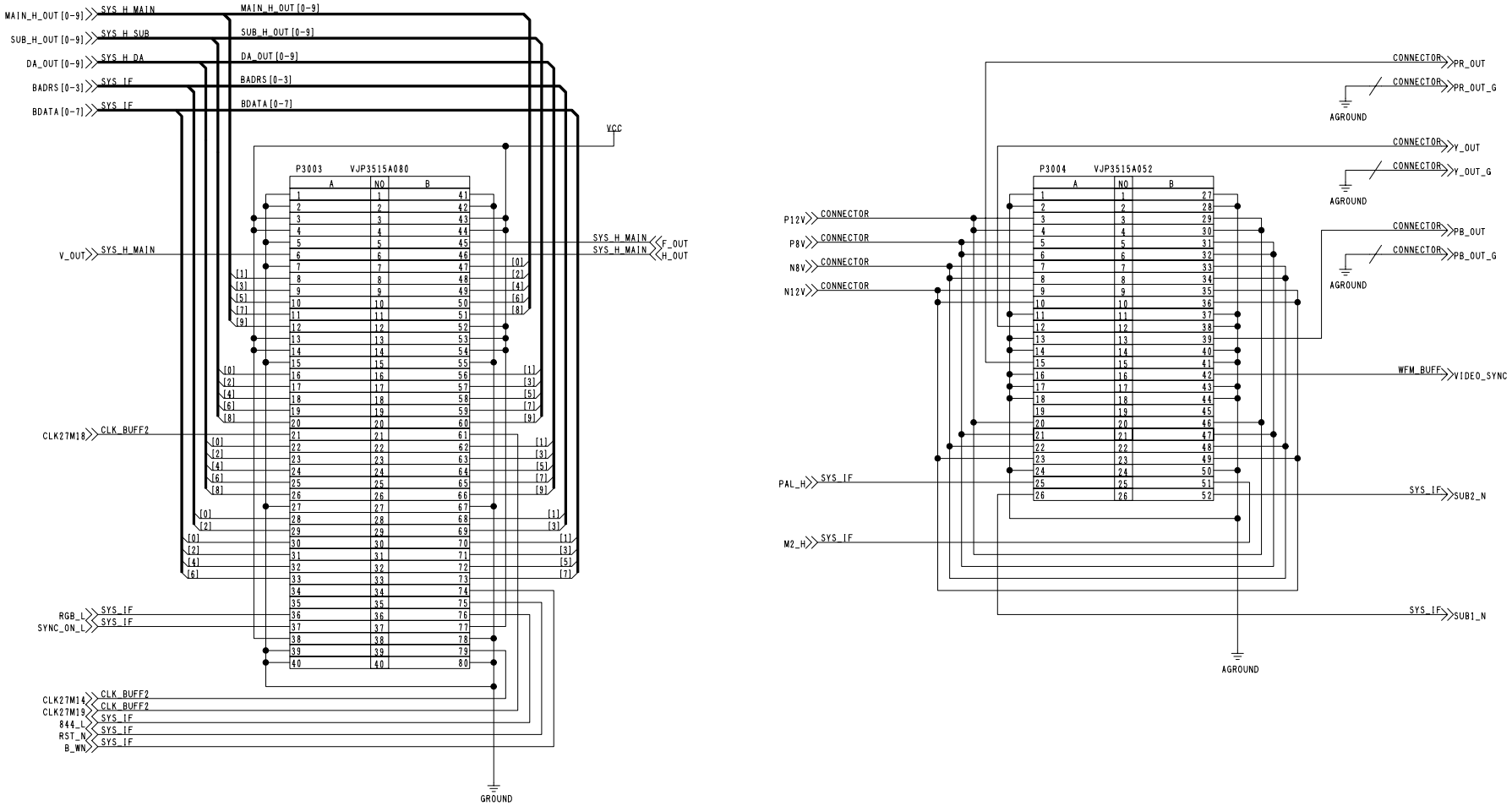

COMPONENT NAME	F5:V OUT (V_OUT_SUB)	39/40
CIRCUIT BOARD NO.		DRAWING NO.
VEP83494A-1		KR3X95 (39/40)
		SCM091

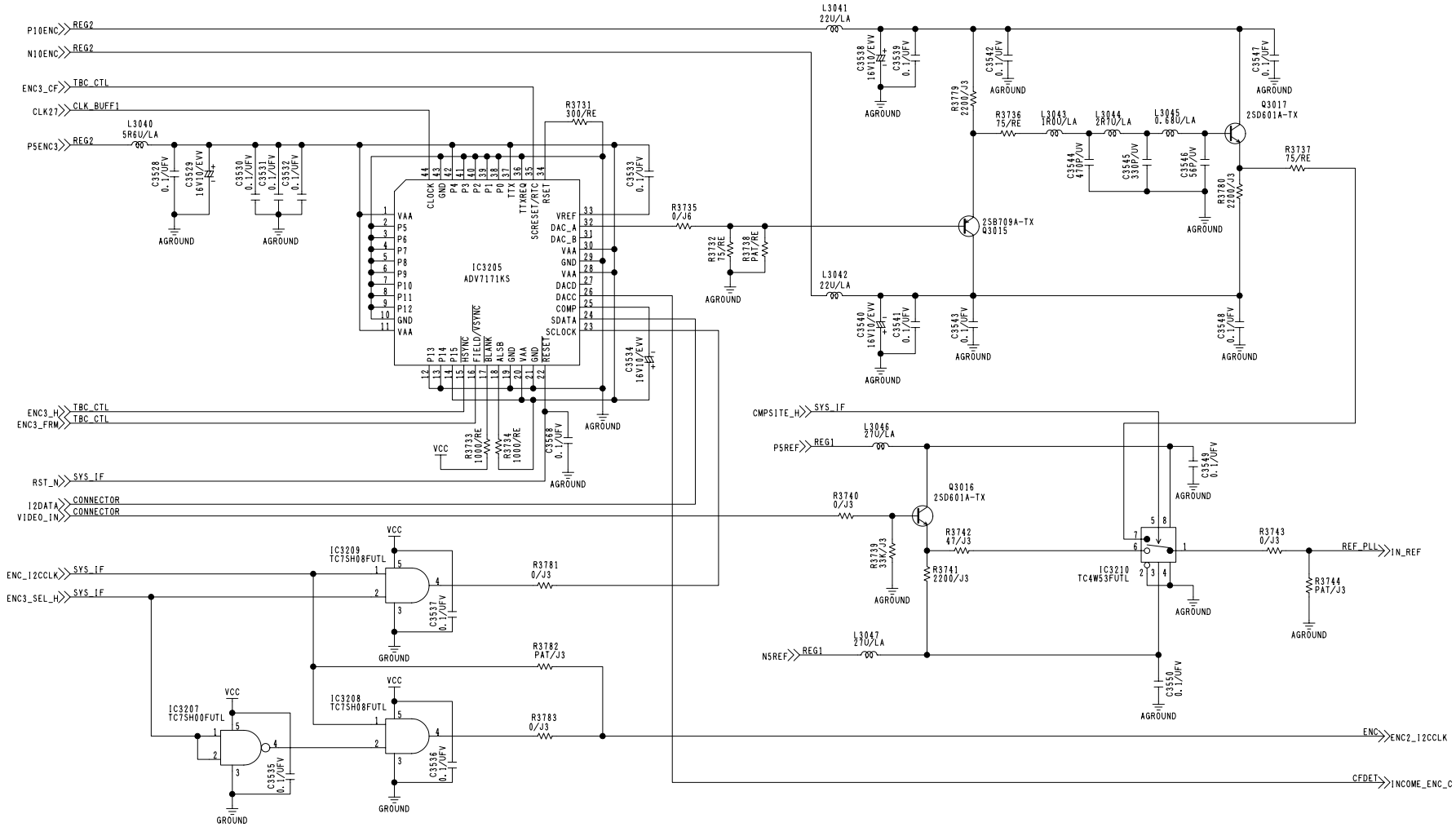

COMPONENT NAME	F5:V OUT (INCOME_ENC)	40/40
CIRCUIT BOARD NO.		DRAWING NO.
VEP83494A-1		KR3X95 (40/40)
		SCM092

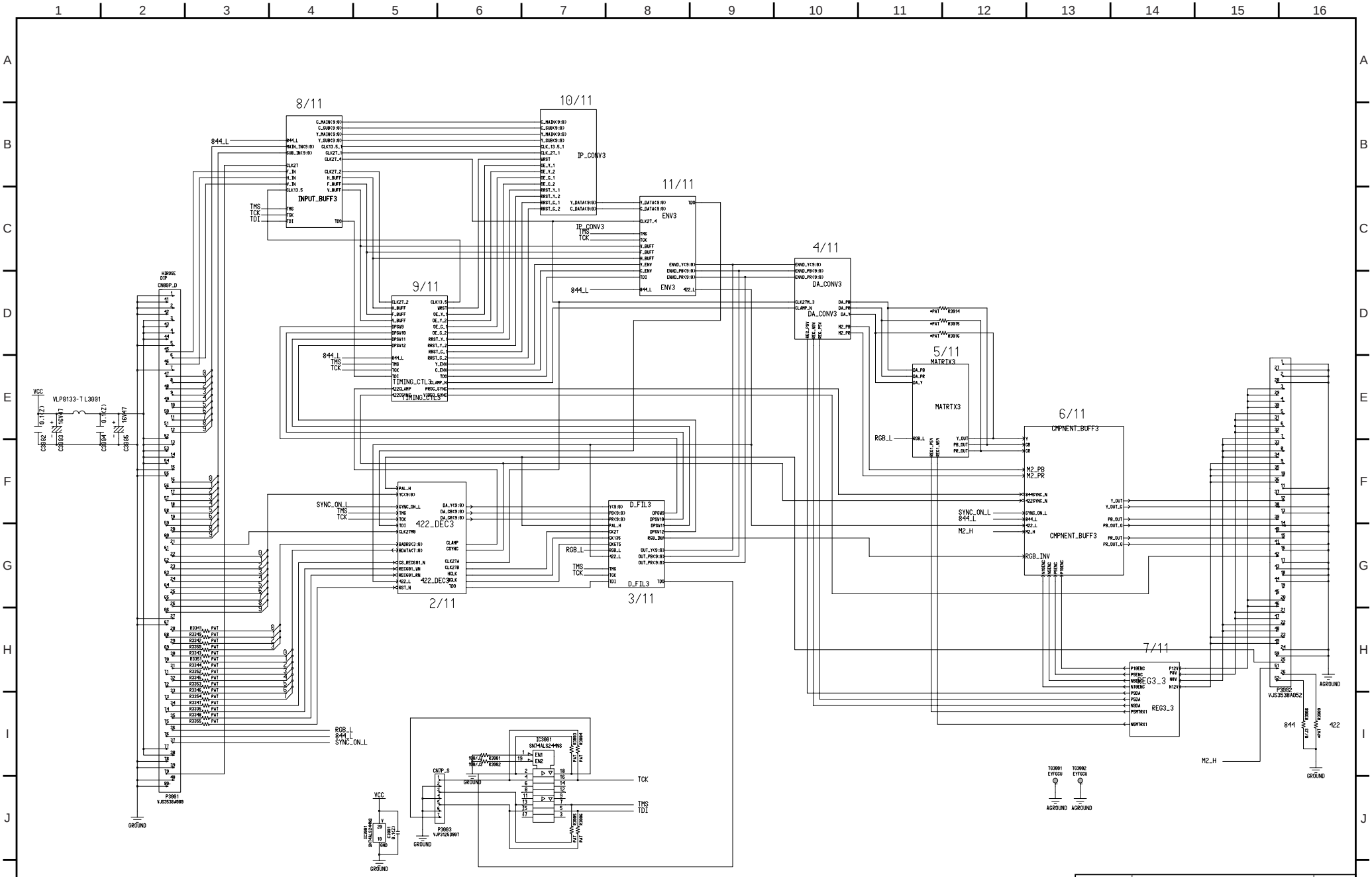

COMPONENT NAME	F5 SUB:422 DA SUB (844DA3)	01/12
CIRCUIT BOARD NO.		DRAWING NO.
VEP83385B-4		KR3T50 (1/12)
		SCM093

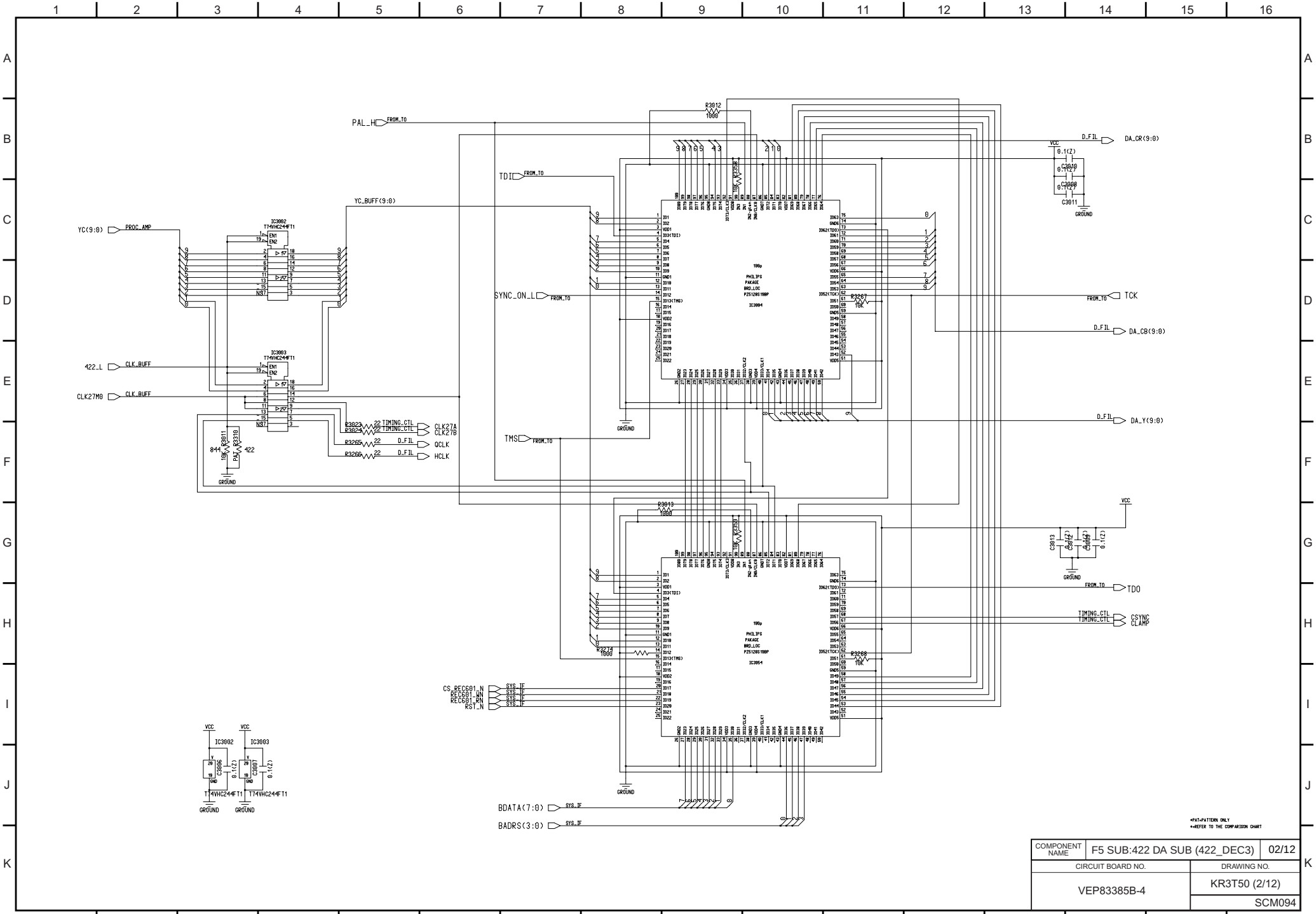

*PAT=PATTERN ONLY
*=REFER TO THE COMPARISON CHART

COMPONENT NAME	F5 SUB:422 DA SUB (422_DEC3)	02/12
CIRCUIT BOARD NO.	DRAWING NO.	
VEP83385B-4	KR3T50 (2/12)	
	SCM094	

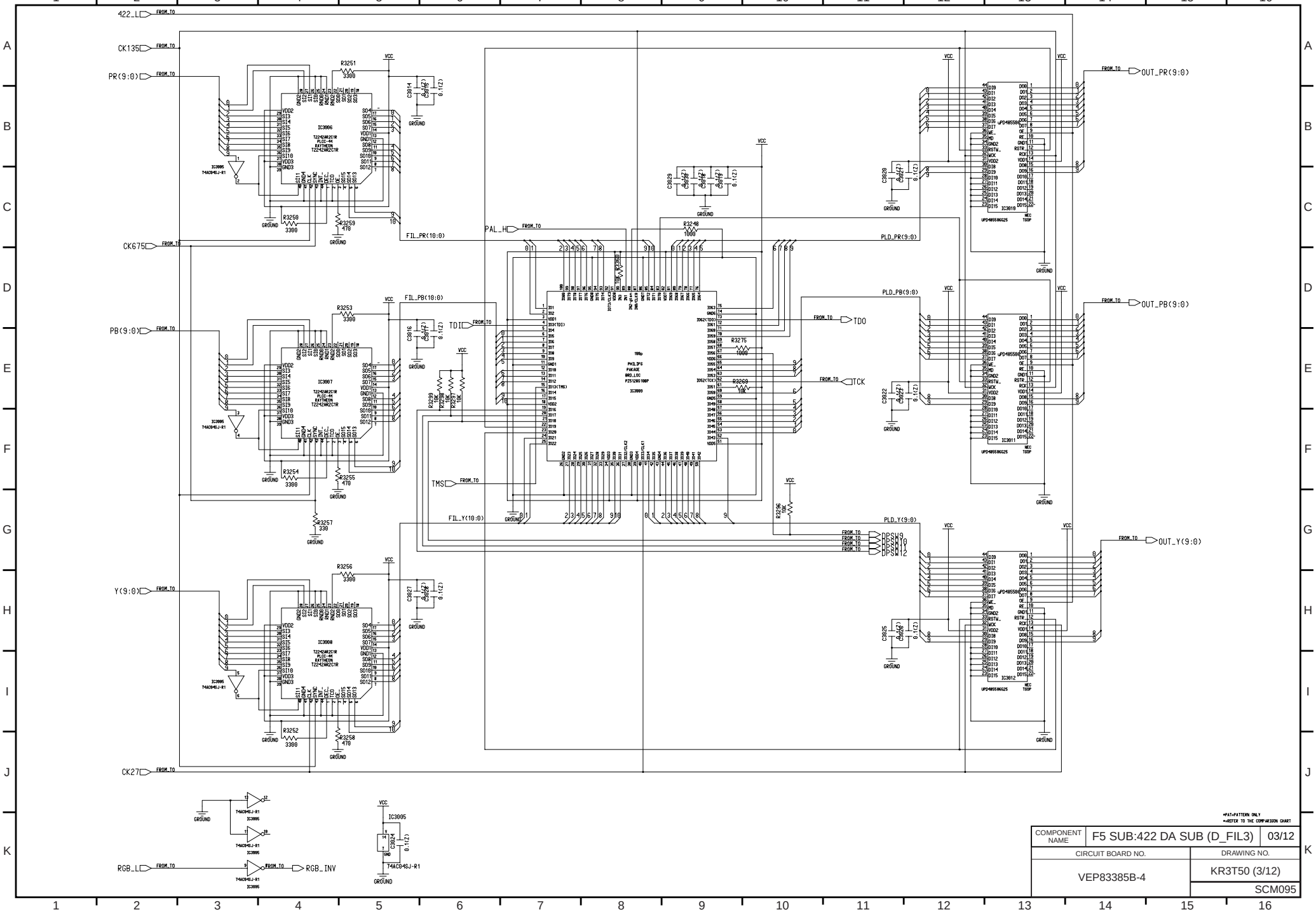

*PAT=PATTERN ONLY
*=REFER TO THE COMPARISON CHART

COMPONENT NAME	F5 SUB:422 DA SUB (D_FIL3)	03/12
CIRCUIT BOARD NO.		DRAWING NO.
VEP83385B-4		KR3T50 (3/12)
		SCM095

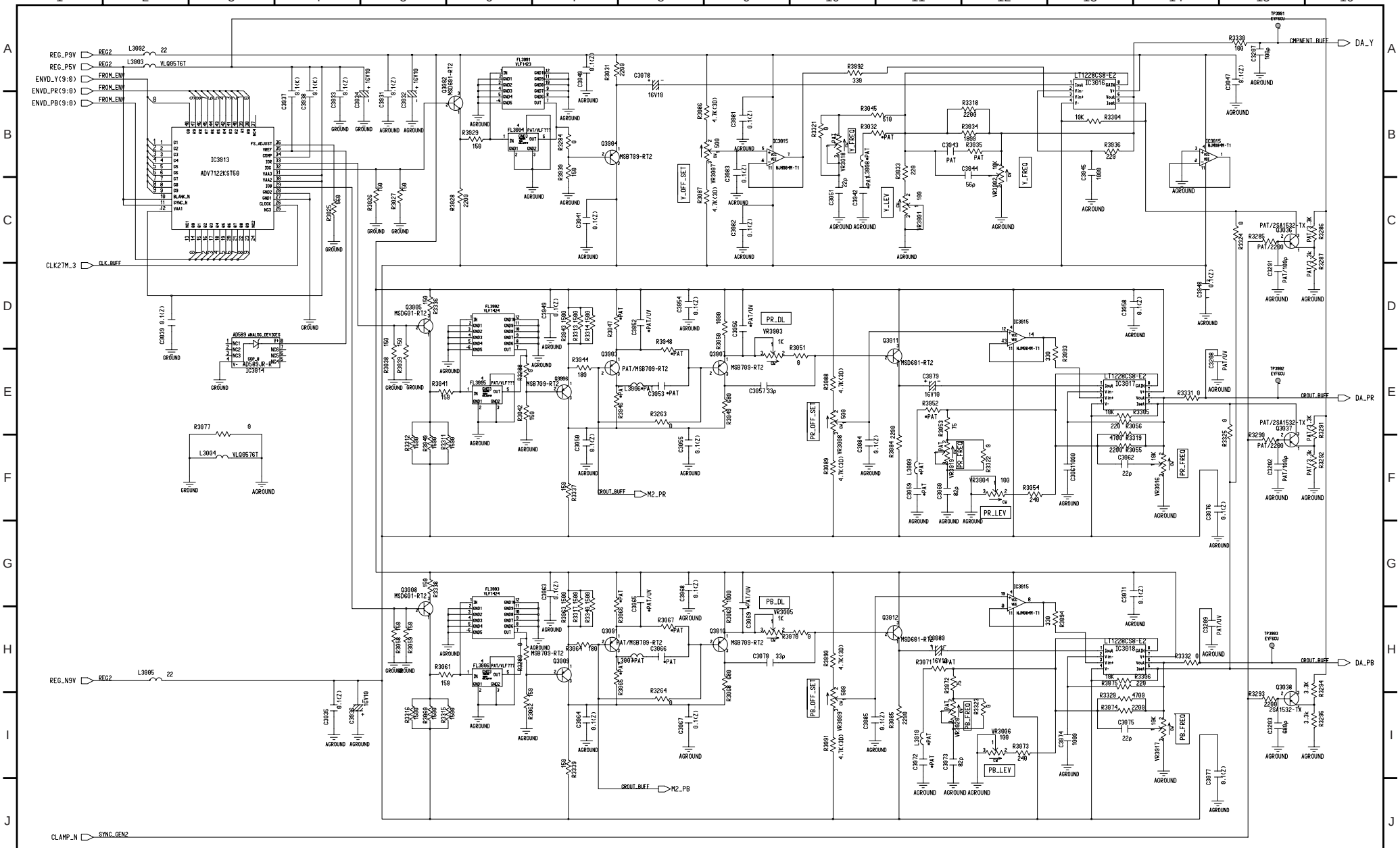

COMPONENT NAME	F5 SUB:422 DA SUB (DA_CONV3)	04/12
CIRCUIT BOARD NO.		DRAWING NO.
VEP83385B-4		KR3T50 (4/12)
		SCM096

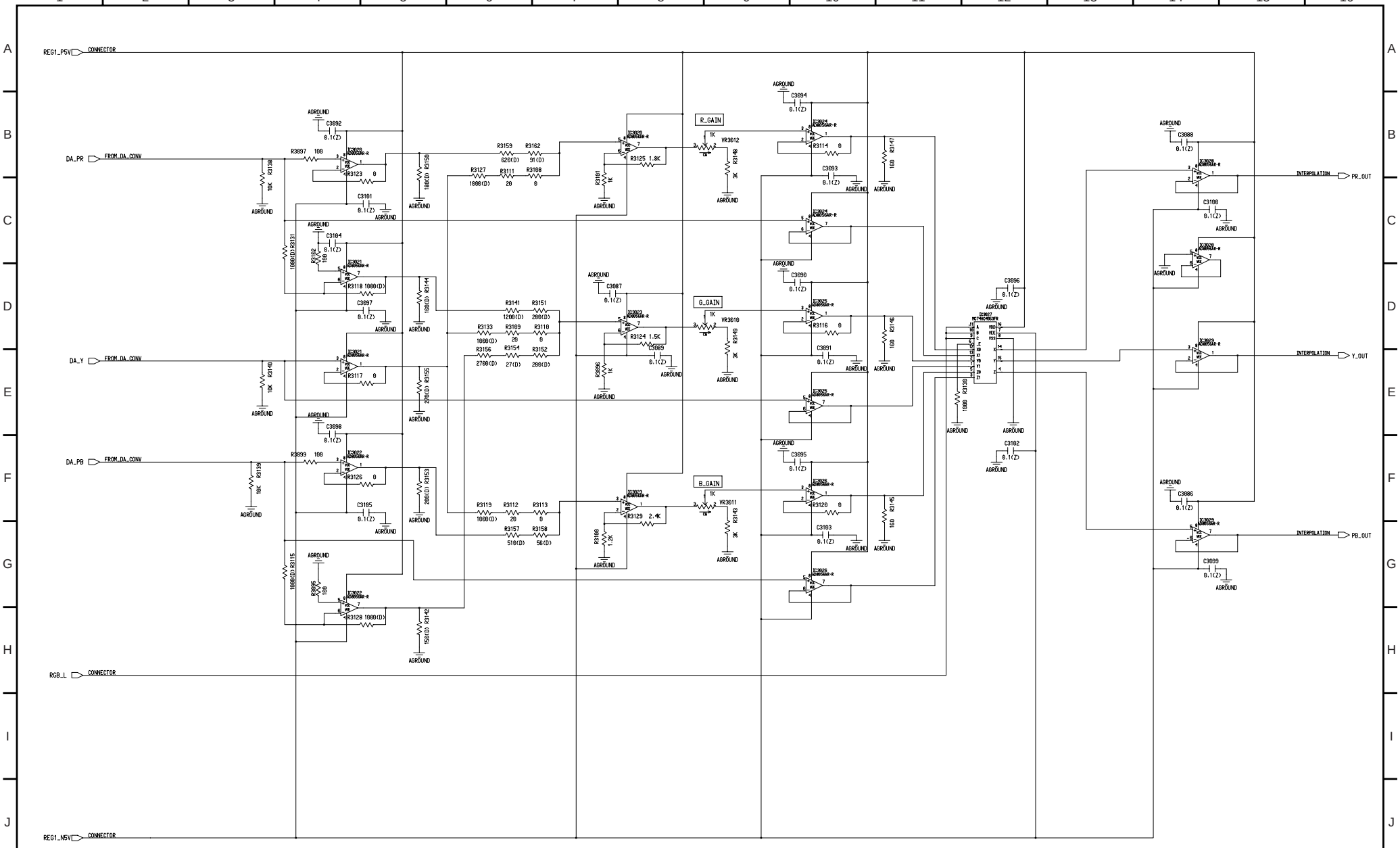

COMPONENT NAME	F5 SUB:422 DA SUB (MATRIX3)	05/12
CIRCUIT BOARD NO.		DRAWING NO.
VEP83385B-4		KR3T50 (5/12)
		SCM097

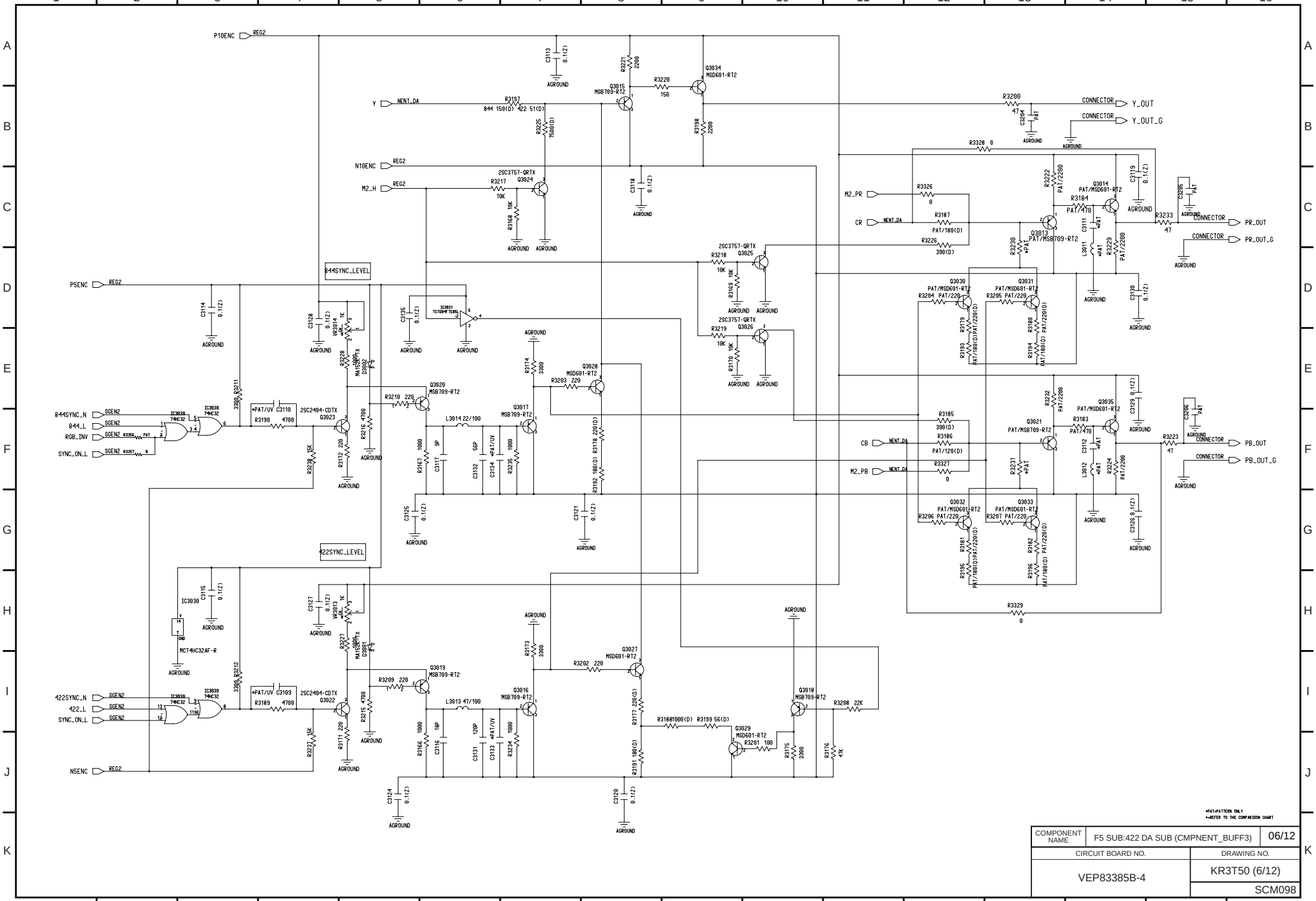

COMPONENT NAME	F5 SUB:422 DA SUB (CMPNENT_BUFF3)	06/12
CIRCUIT BOARD NO.		DRAWING NO.
VEP83385B-4		KR3T50 (6/12)
		SCM098

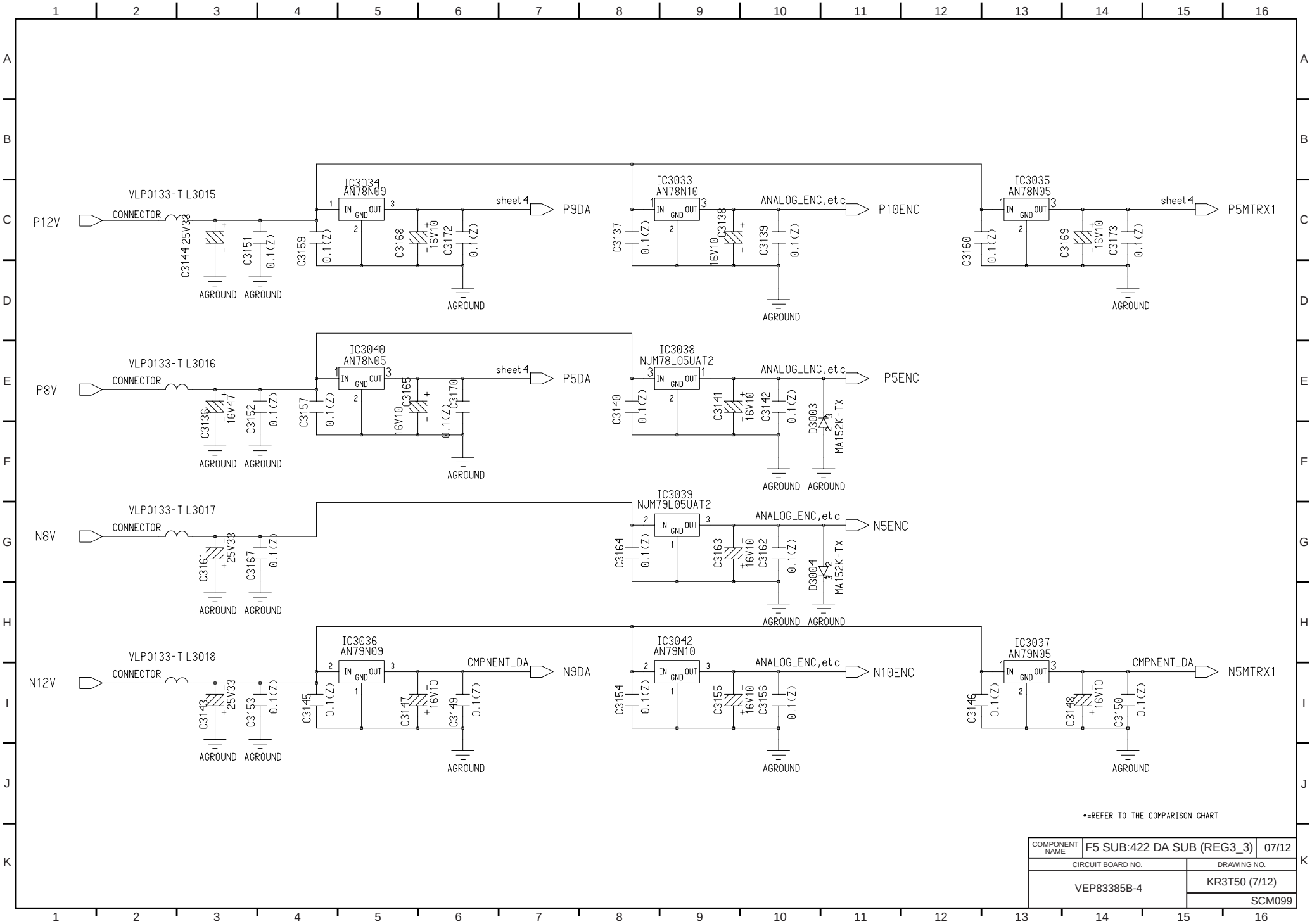

COMPONENT NAME	F5 SUB:422 DA SUB (REG3_3)	07/12
CIRCUIT BOARD NO.		DRAWING NO.
VEP83385B-4		KR3T50 (7/12)
		SCM099

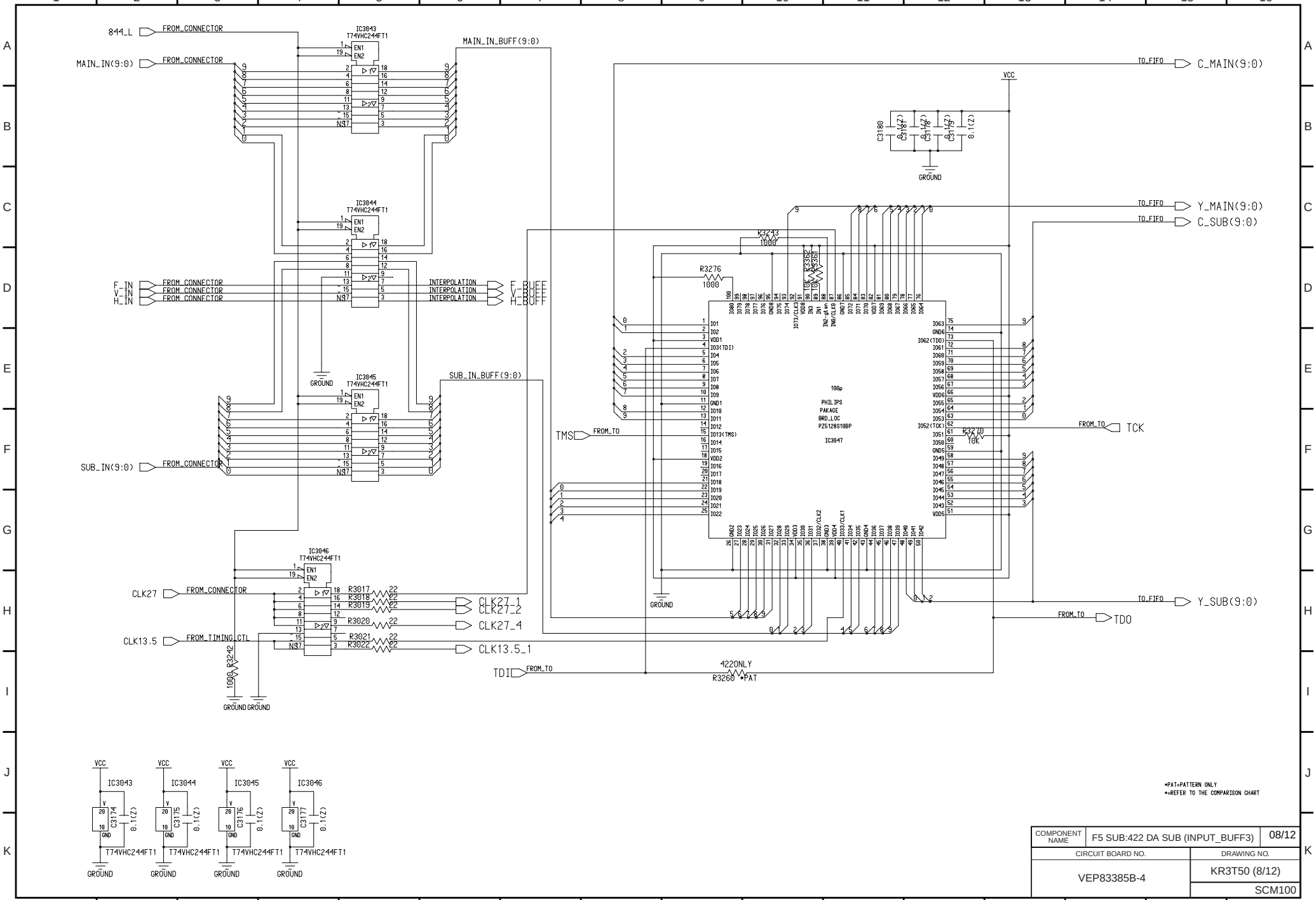

COMPONENT NAME	F5 SUB:422 DA SUB (INPUT_BUFF3)	08/12
CIRCUIT BOARD NO.		DRAWING NO.
VEP83385B-4		KR3T50 (8/12)
		SCM100

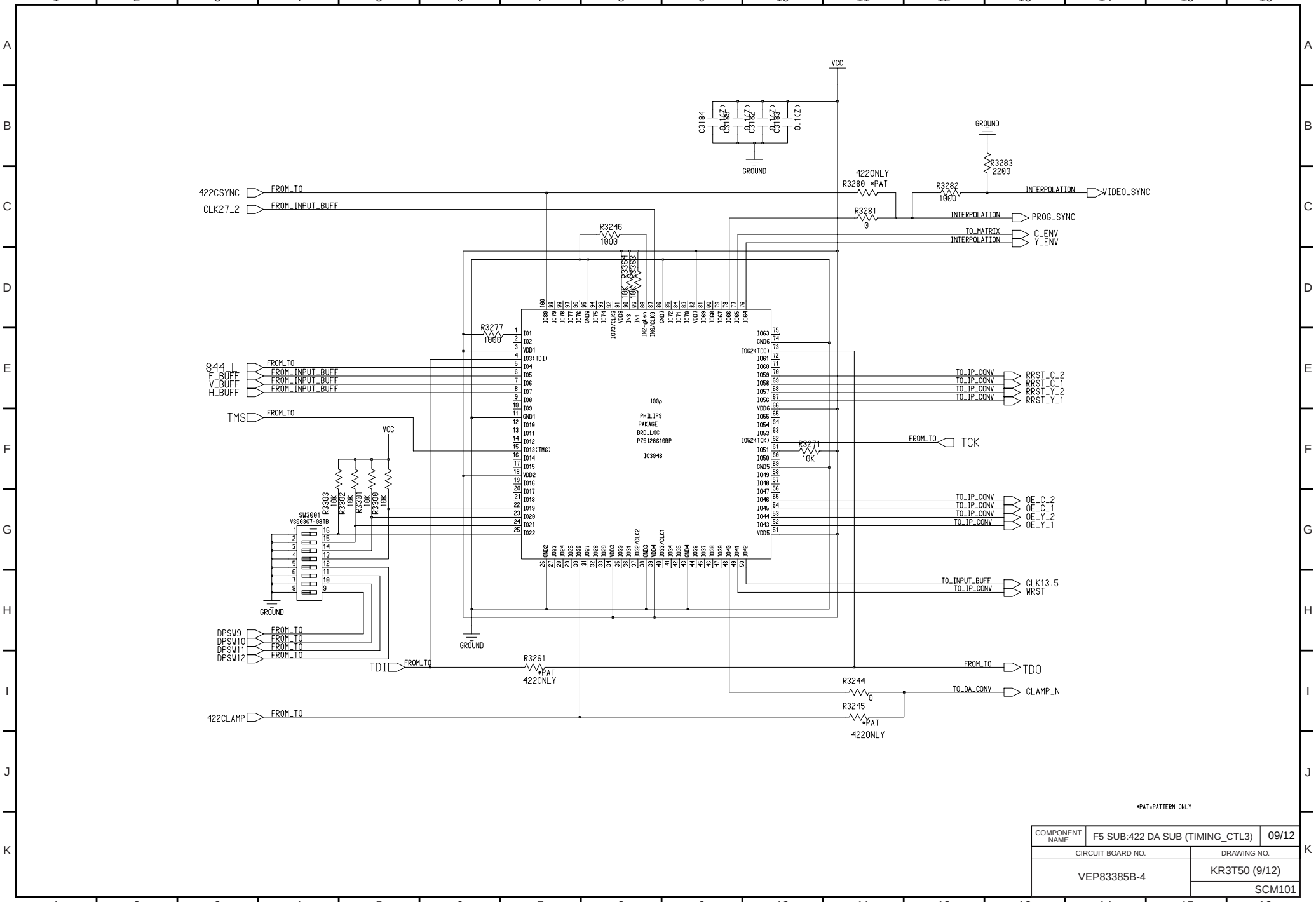

COMPONENT NAME	F5 SUB:422 DA SUB (TIMING_CTL3)	09/12
CIRCUIT BOARD NO.		DRAWING NO.
VEP83385B-4		KR3T50 (9/12)
		SCM101

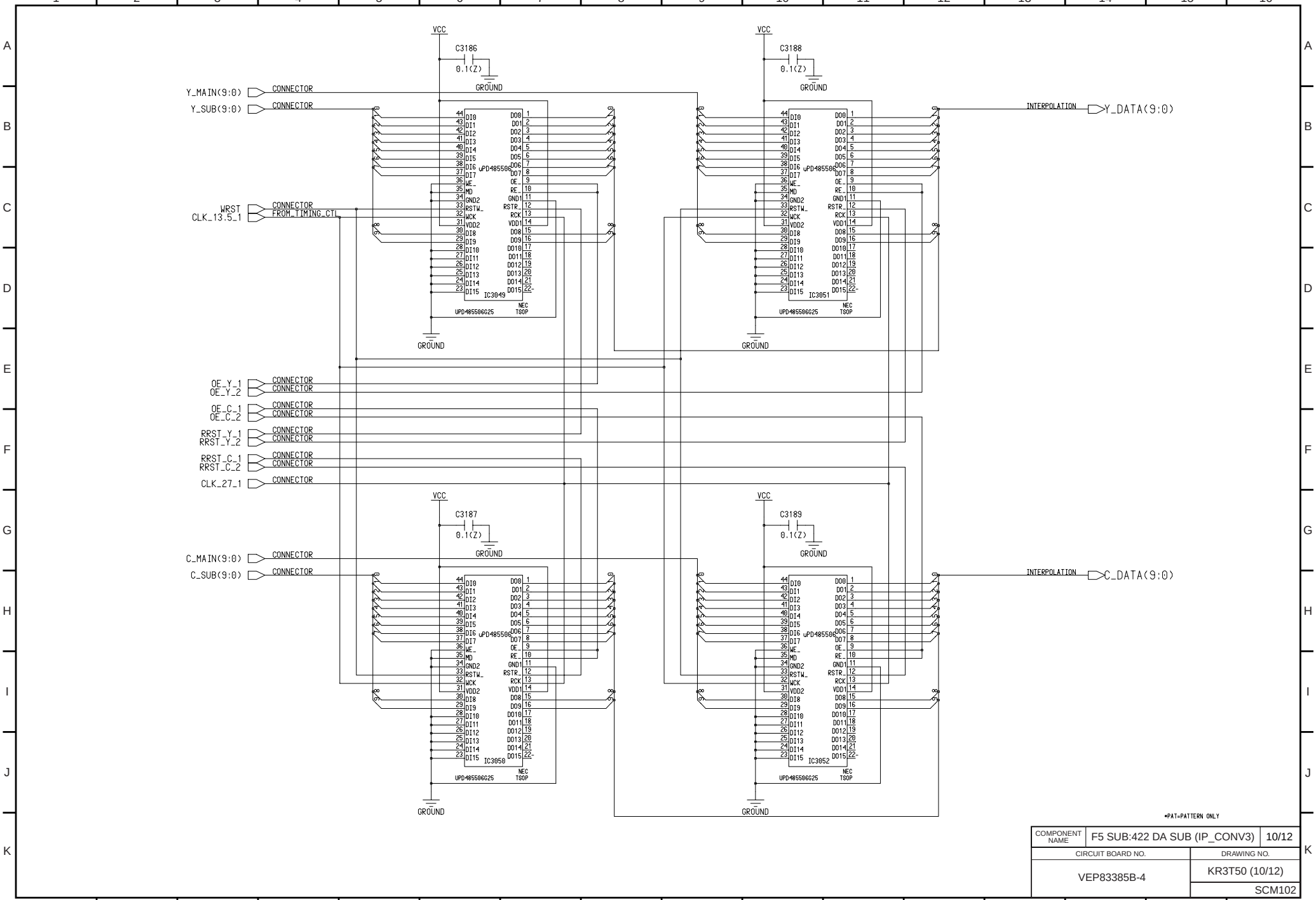

*PAT=PATTERN ONLY

COMPONENT NAME	F5 SUB:422 DA SUB (IP_CONV3)	10/12
CIRCUIT BOARD NO.	DRAWING NO.	
VEP83385B-4	KR3T50 (10/12)	
	SCM102	

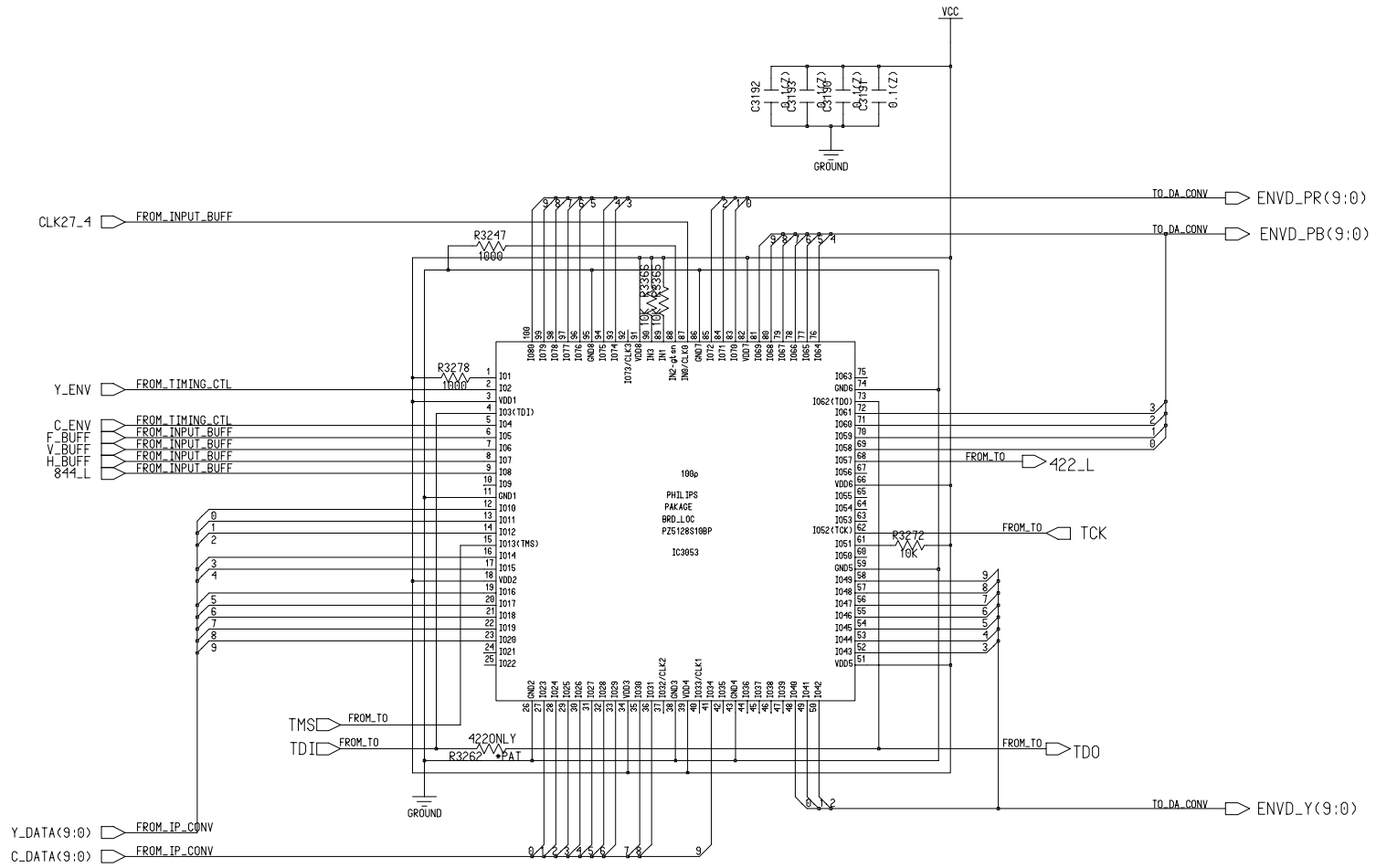

*PAT=PATTERN ONLY

COMPONENT NAME	F5 SUB:422 DA SUB (ENV3)	11/12
CIRCUIT BOARD NO.		DRAWING NO.
VEP83385B-4		KR3T50 (11/12)
		SCM103

Ref No.	844DA_SUB	422DA_SUB
C3086	ECUV1E104ZFV	------
C3087	ECUV1E104ZFV	------
C3088	ECUV1E104ZFV	------
C3089	ECUV1E104ZFV	------
C3090	ECUV1E104ZFV	------
C3091	ECUV1E104ZFV	------
C3092	ECUV1E104ZFV	------
C3093	ECUV1E104ZFV	------
C3094	ECUV1E104ZFV	------
C3095	ECUV1E104ZFV	------
C3096	ECUV1E104ZFV	------
C3097	ECUV1E104ZFV	------
C3098	ECUV1E104ZFV	------
C3099	ECUV1E104ZFV	------
C3100	ECUV1E104ZFV	------
C3101	ECUV1E104ZFV	------
C3102	ECUV1E104ZFV	------
C3103	ECUV1E104ZFV	------
C3104	ECUV1E104ZFV	------
C3105	ECUV1E104ZFV	------
C3114	ECUV1E104ZFV	------
C3117	ECUV1H090DCV	------
C3121	ECUV1E104ZFV	------
C3125	ECUV1E104ZFV	------
C3128	ECUV1E104ZFV	------
C3132	ECUV1H560JCV	------
C3174	ECUV1E104ZFV	------
C3175	ECUV1E104ZFV	------
C3176	ECUV1E104ZFV	------
C3177	ECUV1E104ZFV	------
C3178	ECUV1E104ZFV	------
C3179	ECUV1E104ZFV	------
C3180	ECUV1E104ZFV	------
C3181	ECUV1E104ZFV	------
C3182	ECUV1E104ZFV	------
C3183	ECUV1E104ZFV	------
C3184	ECUV1E104ZFV	------
C3185	ECUV1E104ZFV	------
C3186	ECUV1E104ZFV	------
C3187	ECUV1E104ZFV	------
C3188	ECUV1E104ZFV	------
C3189	ECUV1E104ZFV	------
C3190	ECUV1E104ZFV	------
C3191	ECUV1E104ZFV	------
C3192	ECUV1E104ZFV	------
C3193	ECUV1E104ZFV	------
D3002	MA152K-TX	------
IC3020	AD8056AR-R	------
IC3021	AD8056AR-R	------
IC3022	AD8056AR-R	------
IC3023	AD8056AR-R	------
IC3024	AD8056AR-R	------
IC3025	AD8056AR-R	------
IC3026	AD8056AR-R	------
IC3027	MC74HC4053FR	------
IC3028	AD8056AR-R	------
IC3029	AD8056AR-R	------
IC3035	AN78N05	------
IC3037	AN79N05	------
IC3043	T74VHC244FT1	------

Ref No.	844DA_SUB	422DA_SUB
IC3044	T74VHC244FT1	------
IC3045	T74VHC244FT1	------
IC3046	T74VHC244FT1	------
IC3047	PZ5128S10BP	------
IC3048	PZ5128S10BP	------
IC3049	UPD485506G25	------
IC3050	UPD485506G25	------
IC3051	UPD485506G25	------
IC3052	UPD485506G25	------
IC3053	PZ5128S10BP	------
L3014	VLQ0163J220	------
Q3017	MSB709-RT2	------
Q3020	MSB709-RT2	------
Q3023	2SC2404-CDTX	------
Q3028	MSD601-RT2	------
R3008	ERJ3GEY0R00V	------
R3009	------	ERJ3GEY0R00V
R3011	ERJ3GEYJ103V	------
R3014	------	ERJ3GEY0R00V
R3015	------	ERJ3GEY0R00V
R3016	------	ERJ3GEY0R00V
R3017	ERJ3GEYJ220V	------
R3018	ERJ3GEYJ220V	------
R3019	ERJ3GEYJ220V	------
R3020	ERJ3GEYJ220V	------
R3021	ERJ3GEYJ220V	------
R3022	ERJ3GEYJ220V	------
R3095	ERJ3GEYJ101V	------
R3096	ERJ3GEYJ102V	------
R3097	ERJ3GEYJ101V	------
R3099	ERJ3GEYJ101V	------
R3100	ERJ3GEYJ122V	------
R3101	ERJ3GEYJ102V	------
R3102	ERJ3GEYJ101V	------
R3108	ERJ6GEY0R00V	------
R3109	ERJ6RED200V	------
R3110	ERJ6GEY0R00V	------
R3111	ERJ6RED200V	------
R3112	ERJ6RED200V	------
R3113	ERJ6GEY0R00V	------
R3114	ERJ3GEY0R00V	------
R3115	ERJ6RBD102V	------
R3116	ERJ3GEY0R00V	------
R3117	ERJ3GEY0R00V	------
R3118	ERJ6RBD102V	------
R3119	ERJ6RBD102V	------
R3120	ERJ3GEY0R00V	------
R3123	ERJ3GEY0R00V	------
R3124	ERJ3GEYJ152V	------
R3125	ERJ3GEYJ182V	------
R3126	ERJ3GEY0R00V	------
R3127	ERJ6RBD102V	------
R3128	ERJ6RBD102V	------
R3129	ERJ3GEYJ242V	------
R3130	ERJ3GEYJ102V	------
R3131	ERJ6RBD102V	------
R3133	ERJ6RBD102V	------
R3138	ERJ3GEYJ103V	------
R3139	ERJ3GEYJ103V	------
R3140	ERJ3GEYJ103V	------

Ref No.	844DA_SUB	422DA_SUB
R3141	ERJ6RBD122V	------
R3142	ERJ6RBD151V	------
R3143	ERJ3GEYJ302V	------
R3144	ERJ6RBD161V	------
R3145	ERJ3GEYJ161V	------
R3146	ERJ3GEYJ161V	------
R3147	ERJ3GEYJ161V	------
R3148	ERJ3GEYJ302V	------
R3149	ERJ3GEYJ302V	------
R3150	ERJ6RBD181V	------
R3151	ERJ6RBD201V	------
R3152	ERJ6RBD201V	------
R3153	ERJ6RBD201V	------
R3154	ERJ6RED270V	------
R3155	ERJ6RBD271V	------
R3156	ERJ6RBD272V	------
R3157	ERJ6RBD511V	------
R3158	ERJ6RED560V	------
R3159	ERJ6RBD621V	------
R3162	ERJ6RBD910V	------
R3167	ERJ3GEYJ102V	------
R3172	ERJ3GEYJ221V	------
R3174	ERJ3GEYJ332V	------
R3178	ERJ6RBD221V	------
R3190	ERJ3GEYJ472V	------
R3192	ERJ6RBD181V	------
R3197	ERJ6RBD151V	ERJ6RED510V
R3203	ERJ3GEYJ221V	------
R3210	ERJ3GEYJ221V	------
R3211	ERJ3GEYJ332V	------
R3216	ERJ3GEYJ472V	------
R3228	ERJ3GEYJ102V	------
R3235	ERJ3GEYJ102V	------
R3238	ERJ3GEYJ153V	------
R3242	ERJ3GEYJ102V	------
R3243	ERJ3GEYJ102V	------
R3244	ERJ3GEY0R00V	------
R3245	------	ERJ3GEY0R00V
R3246	ERJ3GEYJ102V	------
R3247	ERJ3GEYJ102V	------
R3260	------	ERJ3GEY0R00V
R3261	------	ERJ3GEY0R00V
R3262	------	ERJ3GEY0R00V
R3270	ERJ3GEYJ103V	------
R3271	ERJ3GEYJ103V	------
R3272	ERJ3GEYJ103V	------
R3276	ERJ3GEYJ102V	------
R3277	ERJ3GEYJ102V	------
R3278	ERJ3GEYJ102V	------
R3280	------	ERJ3GEY0R00V
R3281	ERJ3GEY0R00V	------
R3283	ERJ3GEYJ222V	ERJ3GEYJ121V
R3300	ERJ3GEYJ103V	------
R3301	ERJ3GEYJ103V	------
R3302	ERJ3GEYJ103V	------
R3303	ERJ3GEYJ103V	------
R3310	------	ERJ3GEY0R00V
R3361	ERJ3GEYJ103V	------
R3362	ERJ3GEYJ103V	------
R3363	ERJ3GEYJ103V	------

Ref No.	844DA_SUB	422DA_SUB
R3364	ERJ3GEYJ103V	------
R3365	ERJ3GEYJ103V	------
R3366	ERJ3GEYJ103V	------
VR3010	VRV0113B102T	------
VR3011	VRV0113B102T	------
VR3012	VRV0113B102T	------
VR3014	VRV0113B102T	------
R3032	------	ERJ3GEY270V
L3008	------	VLQ0163J3R3
C3042	------	ECUV1H270JVC

COMPONENT NAME	F5 SUB:422 DA SUB (COMPARISON CHART)	12/12
CIRCUIT BOARD NO.	DRAWING NO.	
VEP83385B-4	KR3T50 (12/12)	
	SCM104	

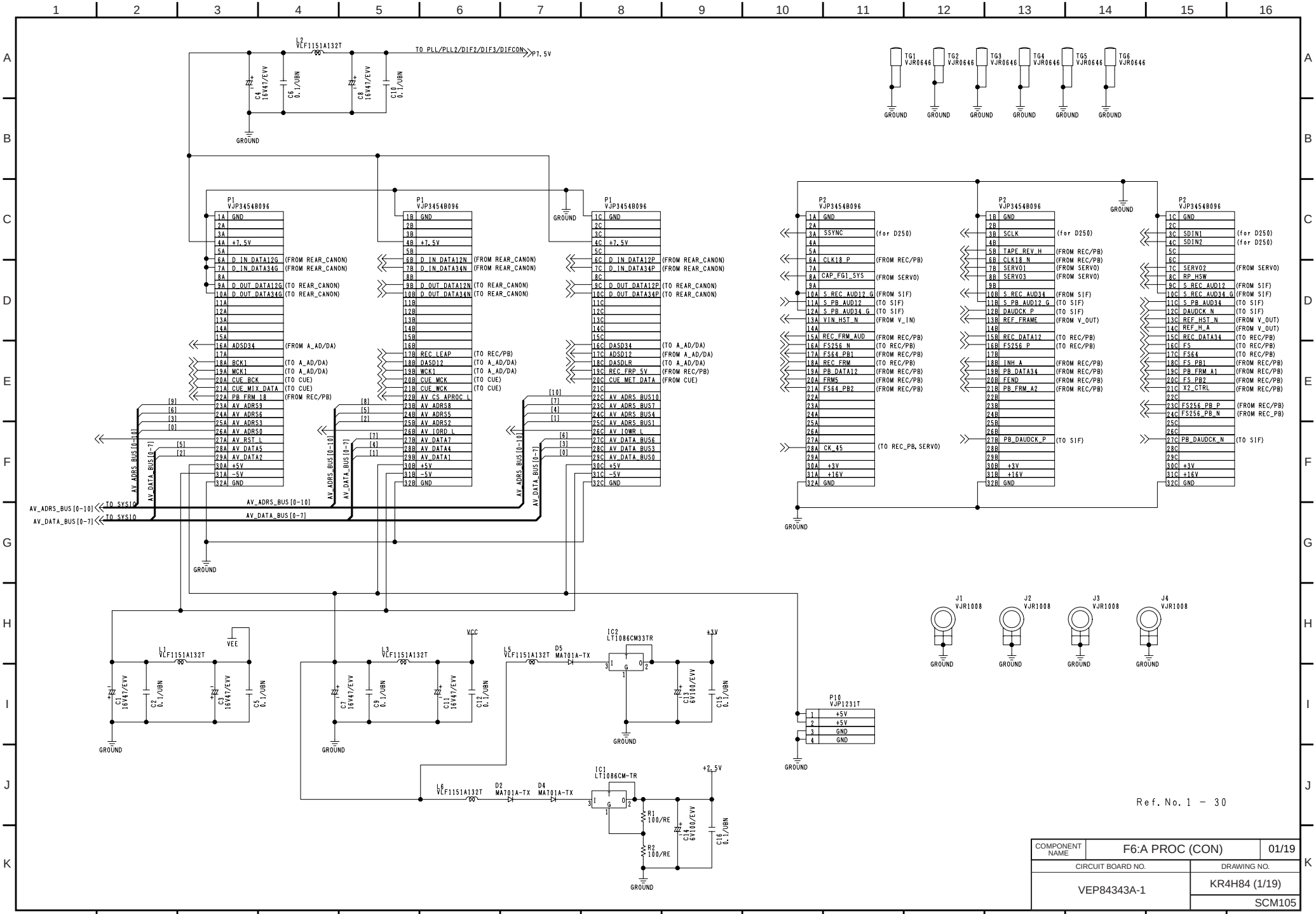
L2 VLF1151A132T
TO PLL/PLL2/DIF2/DIF3/DIFCON
P7.5V
C4 16V41/EVV
C6 0.1/UBN
C8 16V41/EVV
C10 0.1/UBN
GROUND
TG1 VJR0646
TG2 VJR0646
TG3 VJR0646
TG4 VJR0646
TG5 VJR0646
TG6 VJR0646
P1 VJP3454B096
1A GND
4A +7.5V
6A D_IN_DATA12G (FROM REAR_CANON)
7A D_IN_DATA34G (FROM REAR_CANON)
9A D_OUT_DATA12G (TO REAR_CANON)
10A D_OUT_DATA34G (TO REAR_CANON)
16A ADSD34 (FROM A_AD/DA)
18A BCK1 (TO A_AD/DA)
19A WCK1 (TO A_AD/DA)
20A CUE_BCK (TO CUE)
21A CUE_MIX_DATA (TO CUE)
22A PB_FRM_18 (FROM REC/PB)
23A AV_ADRS9
24A AV_ADRS6
25A AV_ADRS3
26A AV_ADRS0
27A AV_RST_L
28A AV_DATA5
29A AV_DATA2
30A +5V
31A -5V
32A GND
1B GND
4B +7.5V
6B D_IN_DATA12N (FROM REAR_CANON)
7B D_IN_DATA34N (FROM REAR_CANON)
9B D_OUT_DATA12N (TO REAR_CANON)
10B D_OUT_DATA34N (TO REAR_CANON)
17B REC_LEAP (TO REC/PB)
18B DASD12 (TO A_AD/DA)
19B WCK1 (TO A_AD/DA)
20B CUE_WCK (TO CUE)
21B CUE_WCK (TO CUE)
22B AV_CS_APROC_L
23B AV_ADRS8
24B AV_ADRS5
25B AV_ADRS2
26B AV_IORD_L
27B AV_DATA7
28B AV_DATA4
29B AV_DATA1
30B +5V
31B -5V
32B GND
1C GND
4C +7.5V
6C D_IN_DATA12P (FROM REAR_CANON)
7C D_IN_DATA34P (FROM REAR_CANON)
9C D_OUT_DATA12P (TO REAR_CANON)
10C D_OUT_DATA34P (TO REAR_CANON)
16C DASD34 (TO A_AD/DA)
17C ADSD12 (FROM A_AD/DA)
18C DASDLR (TO A_AD/DA)
19C REC_FRP_5V (FROM REC/PB)
20C CUE_MET_DATA (FROM CUE)
22C AV_ADRS_BUS10
23C AV_ADRS_BUS7
24C AV_ADRS_BUS4
25C AV_ADRS_BUS1
26C AV_IOWR_L
27C AV_DATA_BUS6
28C AV_DATA_BUS3
29C AV_DATA_BUS0
30C +5V
31C -5V
32C GND
AV_ADRS_BUS[0-10]
AV_DATA_BUS[0-7]
TO SYSIO
P2 VJP3454B096
3A SSYNC (for D250)
6A CLK18_P (FROM REC/PB)
8A CAP_FG1_SYS (FROM SERVO)
10A S_REC_AUD12_G (FROM SIF)
11A S_PB_AUD12 (TO SIF)
12A S_PB_AUD34_G (TO SIF)
13A VIN_HST_N (FROM V_IN)
15A REC_FRM_AUD (FROM REC/PB)
16A FS256_N (TO REC/PB)
17A FS64_PB1 (FROM REC/PB)
18A REC_FRM (TO REC/PB)
19A PB_DATA12 (FROM REC/PB)
20A FRM5 (FROM REC/PB)
21A FS64_PB2 (FROM REC/PB)
28A CK_45 (TO REC_PB, SERVO)
30A +3V
31A +16V
32A GND
3B SCLK (for D250)
5B TAPE_REV_H (FROM REC/PB)
6B CLK18_N (FROM REC/PB)
7B SERVO1 (FROM SERVO)
8B SERVO3 (FROM SERVO)
10B S_REC_AUD34 (FROM SIF)
11B S_PB_AUD12_G (TO SIF)
12B DAUDCK_P (TO SIF)
13B REF_FRAME (FROM V_OUT)
15B REC_DATA12 (TO REC/PB)
16B FS256_P (TO REC/PB)
18B INH_A (FROM REC/PB)
19B PB_DATA34 (FROM REC/PB)
20B FEND (FROM REC/PB)
21B PB_FRM_A2 (FROM REC/PB)
27B PB_DAUDCK_P (TO SIF)
30B +3V
31B +16V
32B GND
1C GND
3C SDIN1 (for D250)
4C SDIN2 (for D250)
7C SERVO2 (FROM SERVO)
8C RP_HSW
9C S_REC_AUD12 (FROM SIF)
10C S_REC_AUD34_G (FROM SIF)
11C S_PB_AUD34 (TO SIF)
12C DAUDCK_N (TO SIF)
13C REF_HST_N (FROM V_OUT)
14C REF_H_A (FROM V_OUT)
15C REC_DATA34 (TO REC/PB)
16C FS (TO REC/PB)
17C FS64 (TO REC/PB)
18C FS_PB1 (FROM REC/PB)
19C PB_FRM_A1 (FROM REC/PB)
20C FS_PB2 (FROM REC/PB)
21C X2_CTRL (FROM REC/PB)
23C FS256_PB_P (FROM REC/PB)
24C FS256_PB_N (FROM REC_PB)
27C PB_DAUDCK_N (TO SIF)
30C +3V
31C +16V
32C GND
J1 VJR1008
J2 VJR1008
J3 VJR1008
J4 VJR1008
VEE
L1 VLF1151A132T
C1 16V47/EVV
C2 0.1/UBN
C3 16V47/EVV
C5 0.1/UBN
VCC
L3 VLF1151A132T
C7 16V47/EVV
C9 0.1/UBN
C11 16V47/EVV
C12 0.1/UBN
L5 VLF1151A132T
D5 MA701A-TX
IC2 LT1086CM33TR
+3V
C13 6V100/EVV
C15 0.1/UBN
P10 VJP1231T
1 +5V
2 +5V
3 GND
4 GND
IC1 LT1086CM-TR
+2.5V
L6 VLF1151A132T
D2 MA701A-TX
D4 MA701A-TX
R1 100/RE
R2 100/RE
C14 6V100/EVV
C16 0.1/UBN
Ref. No. 1 - 30
COMPONENT NAME
F6:A PROC (CON)
01/19
CIRCUIT BOARD NO.
VEP84343A-1
DRAWING NO.
KR4H84 (1/19)
SCM105

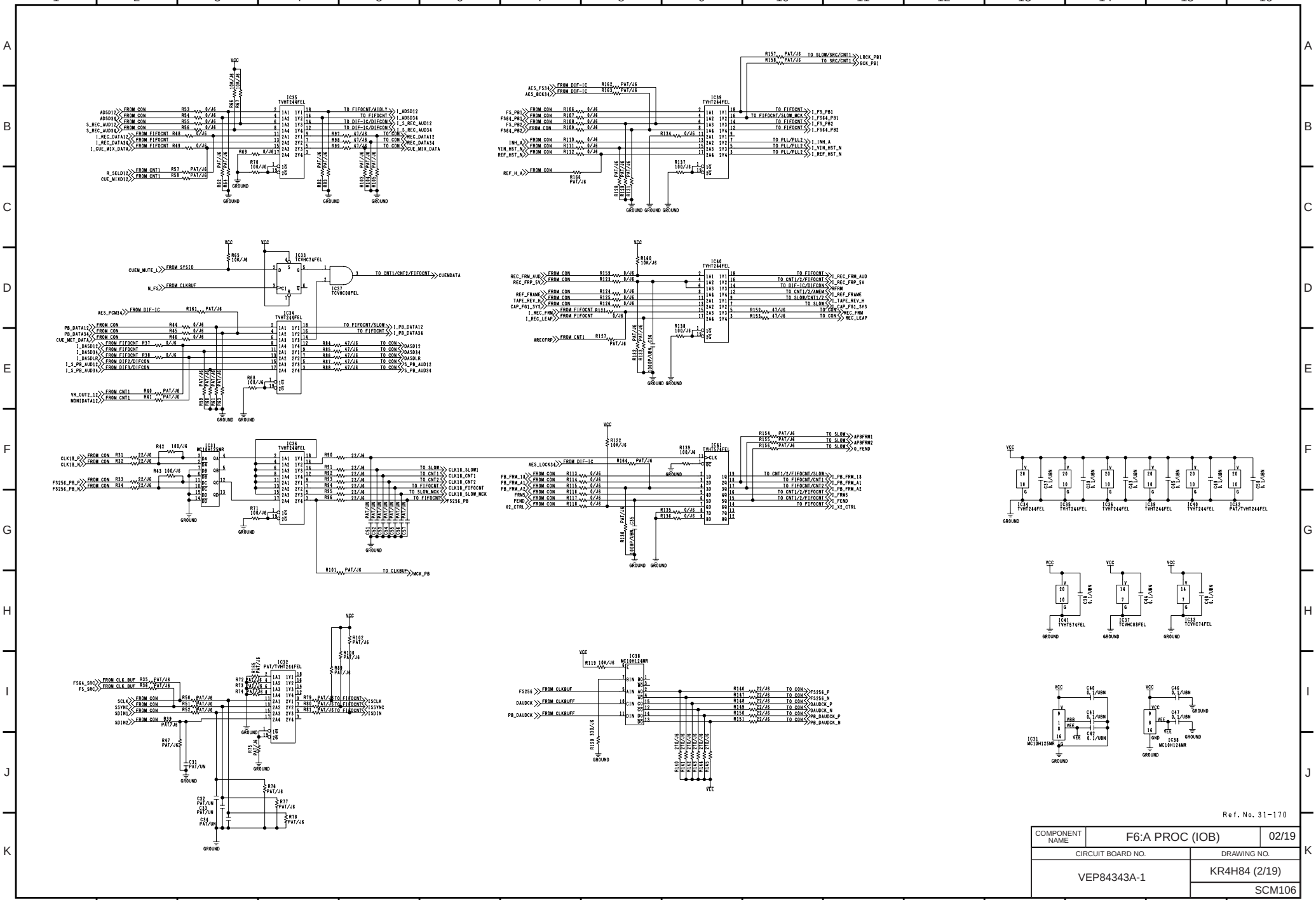

COMPONENT NAME	F6:A PROC (IOB)	02/19
CIRCUIT BOARD NO.	DRAWING NO.	
VEP84343A-1	KR4H84 (2/19)	
	SCM106	

Ref. No. 31-170

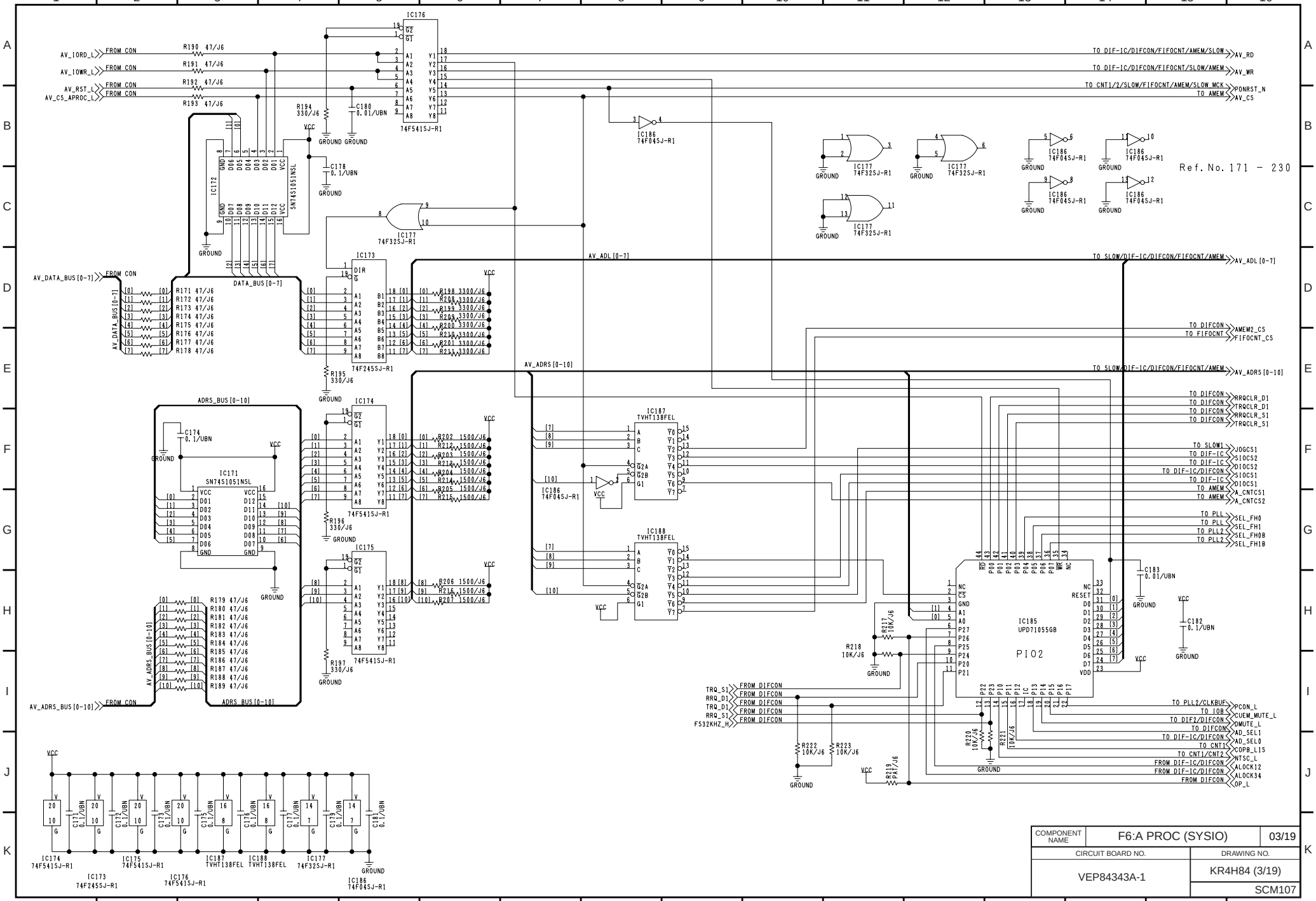

COMPONENT NAME	F6:A PROC (SYSIO)	03/19
CIRCUIT BOARD NO.		DRAWING NO.
VEP84343A-1		KR4H84 (3/19)
		SCM107

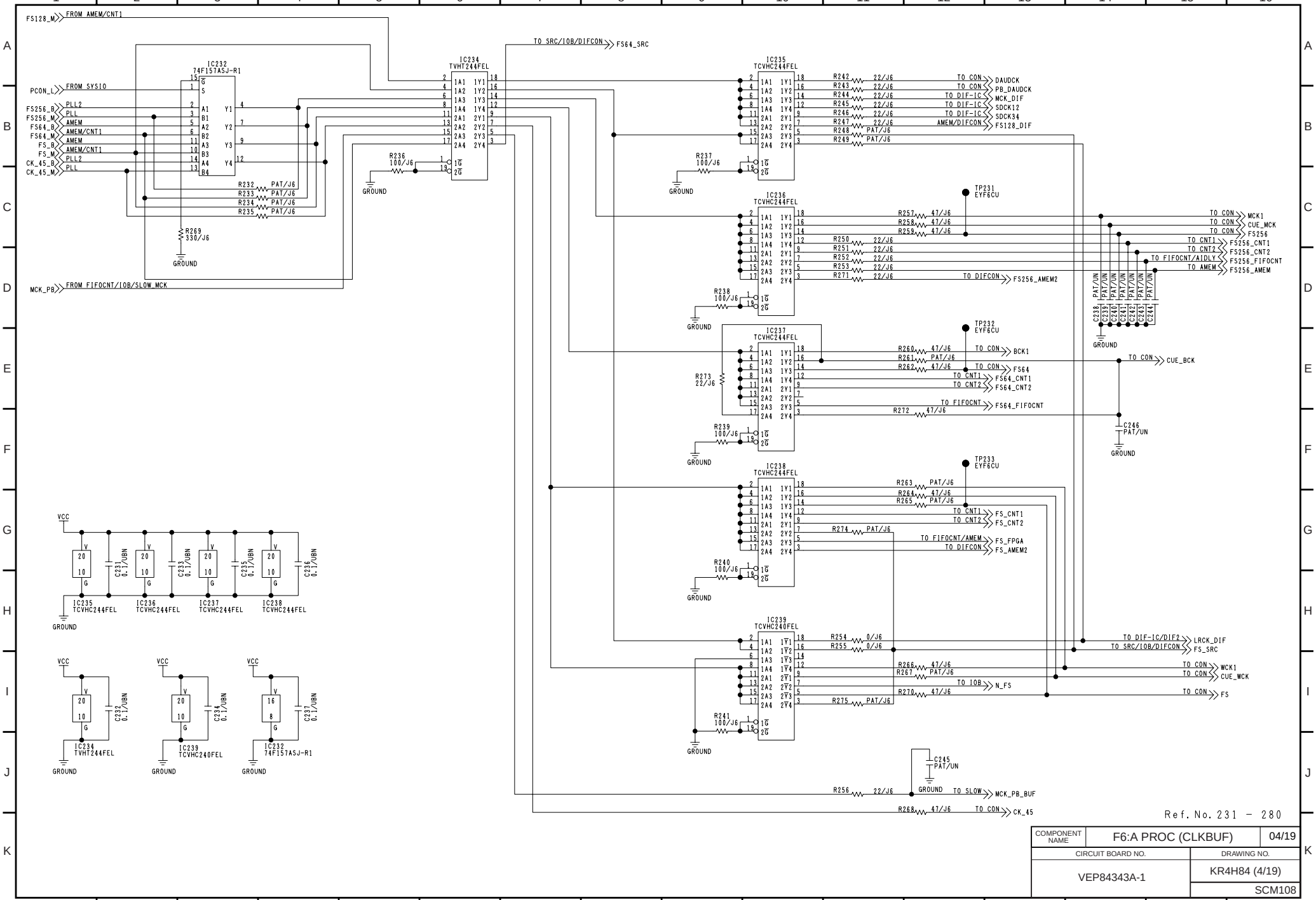
FS128_M
FROM AMEM/CNT1
PCON_L
FROM SYSIO
FS256_B
FS256_M
FS64_B
FS64_M
FS_B
FS_M
CK_45_B
CK_45_M
PLL2
PLL
AMEM
AMEM/CNT1
MCK_PB
FROM FIFOCNT/IOB/SLOW_MCK
IC232
74F157ASJ-R1
IC234
TVHT244FEL
TO SRC/IOB/DIFCON
FS64_SRC
IC235
TCVHC244FEL
IC236
TCVHC244FEL
IC237
TCVHC244FEL
IC238
TCVHC244FEL
IC239
TCVHC240FEL
TP231
EYF6CU
TP232
EYF6CU
TP233
EYF6CU
DAUDCK
PB_DAUDCK
MCK_DIF
SDCK12
SDCK34
FS128_DIF
TO DIF-IC
AMEM/DIFCON
MCK1
CUE_MCK
FS256
FS256_CNT1
FS256_CNT2
FS256_FIFOCNT
FS256_AMEM
TO CNT1
TO CNT2
TO FIFOCNT/AIDLY
TO AMEM
TO DIFCON
FS256_AMEM2
BCK1
CUE_BCK
FS64
FS64_CNT1
FS64_CNT2
FS64_FIFOCNT
TO FIFOCNT
FS_CNT1
FS_CNT2
FS_FPGA
FS_AMEM2
TO FIFOCNT/AMEM
LRCK_DIF
FS_SRC
TO DIF-IC/DIF2
WCK1
CUE_WCK
N_FS
FS
MCK_PB_BUF
TO SLOW
CK_45
TO CON
GROUND
VCC
IC234
TVHT244FEL
IC239
TCVHC240FEL
IC232
74F157ASJ-R1
Ref. No. 231 - 280
COMPONENT NAME
F6:A PROC (CLKBUF)
04/19
CIRCUIT BOARD NO.
DRAWING NO.
VEP84343A-1
KR4H84 (4/19)
SCM108

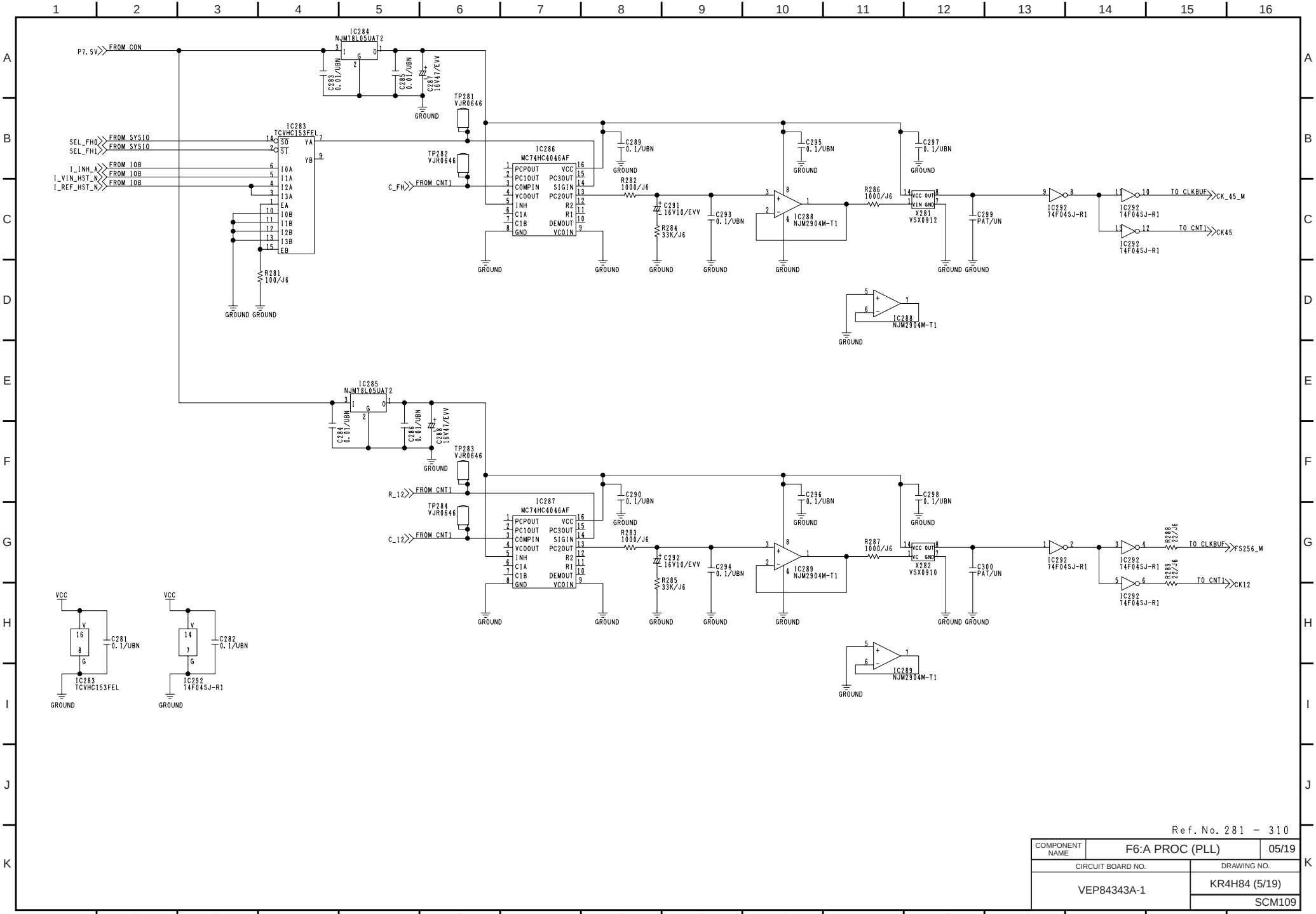

Ref. No. 281 – 310

COMPONENT NAME	F6:A PROC (PLL)	05/19
CIRCUIT BOARD NO.	DRAWING NO.	
VEP84343A-1	KR4H84 (5/19)	
	SCM109	

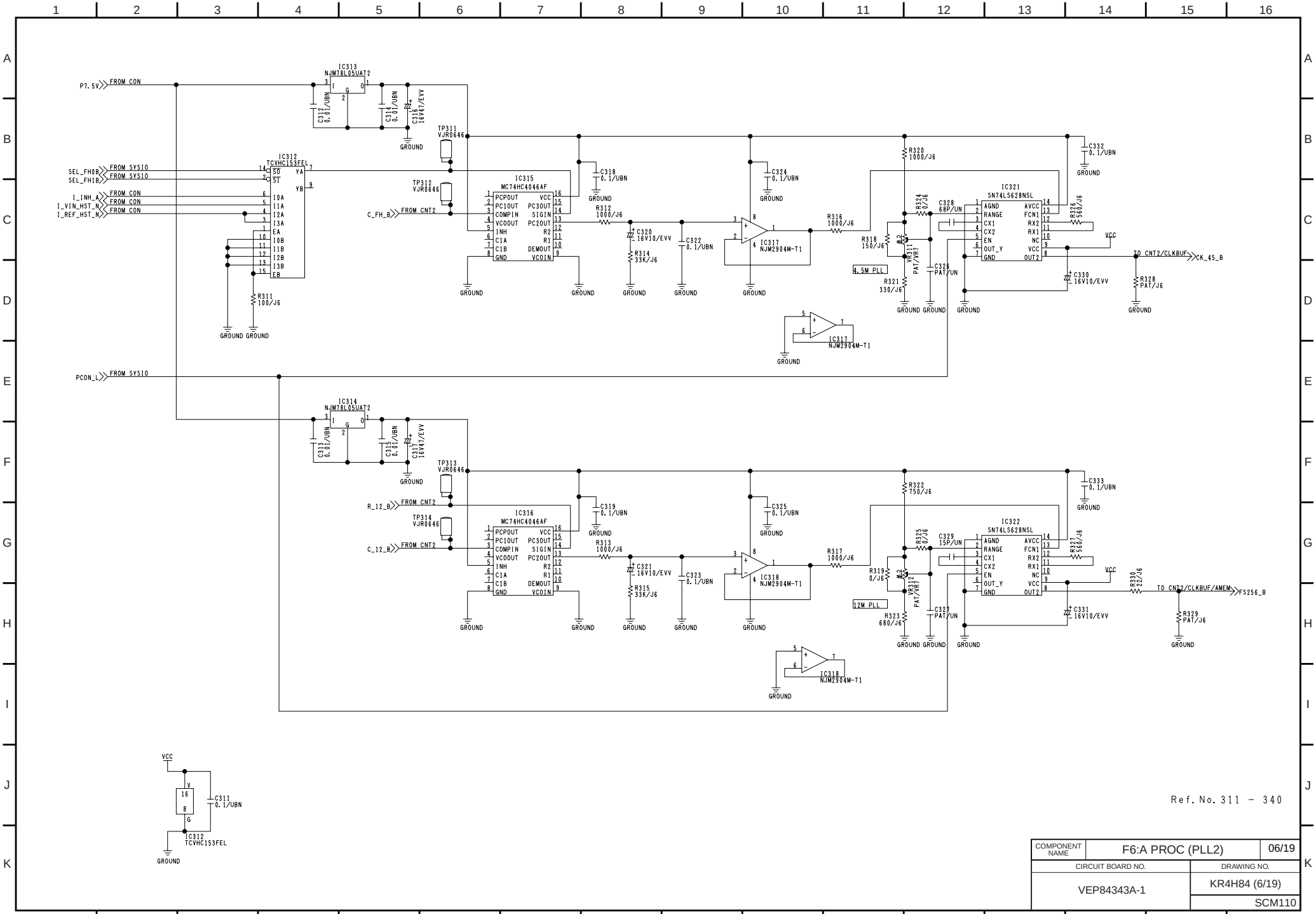

COMPONENT NAME	F6:A PROC (PLL2)	06/19
CIRCUIT BOARD NO.		DRAWING NO.
VEP84343A-1		KR4H84 (6/19)
		SCM110

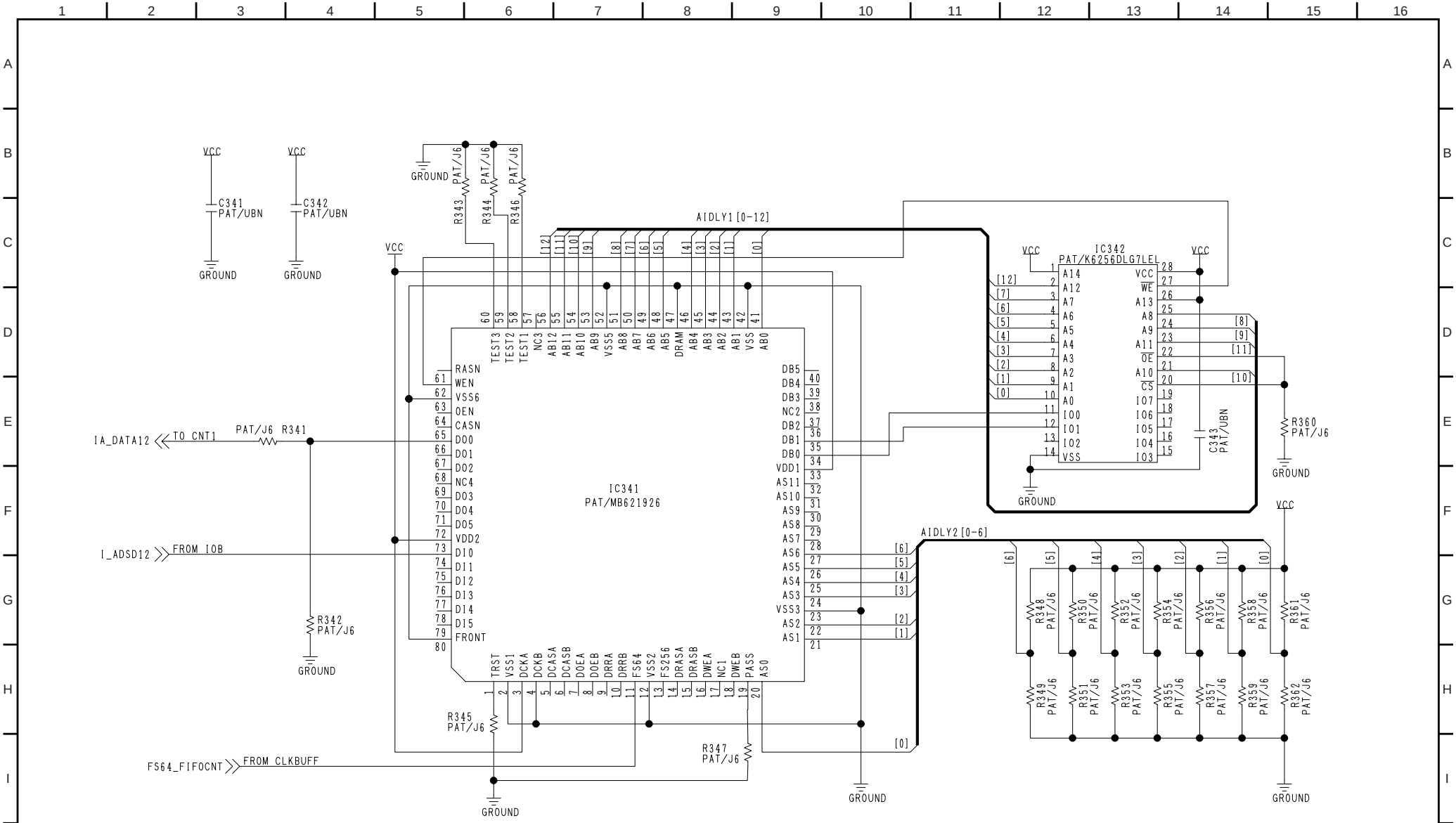

Ref. No. 341 - 370

COMPONENT NAME	F6:A PROC (AIDLY)	07/19
CIRCUIT BOARD NO.		DRAWING NO.
VEP84343A-1		KR4H84 (7/19)
		SCM111

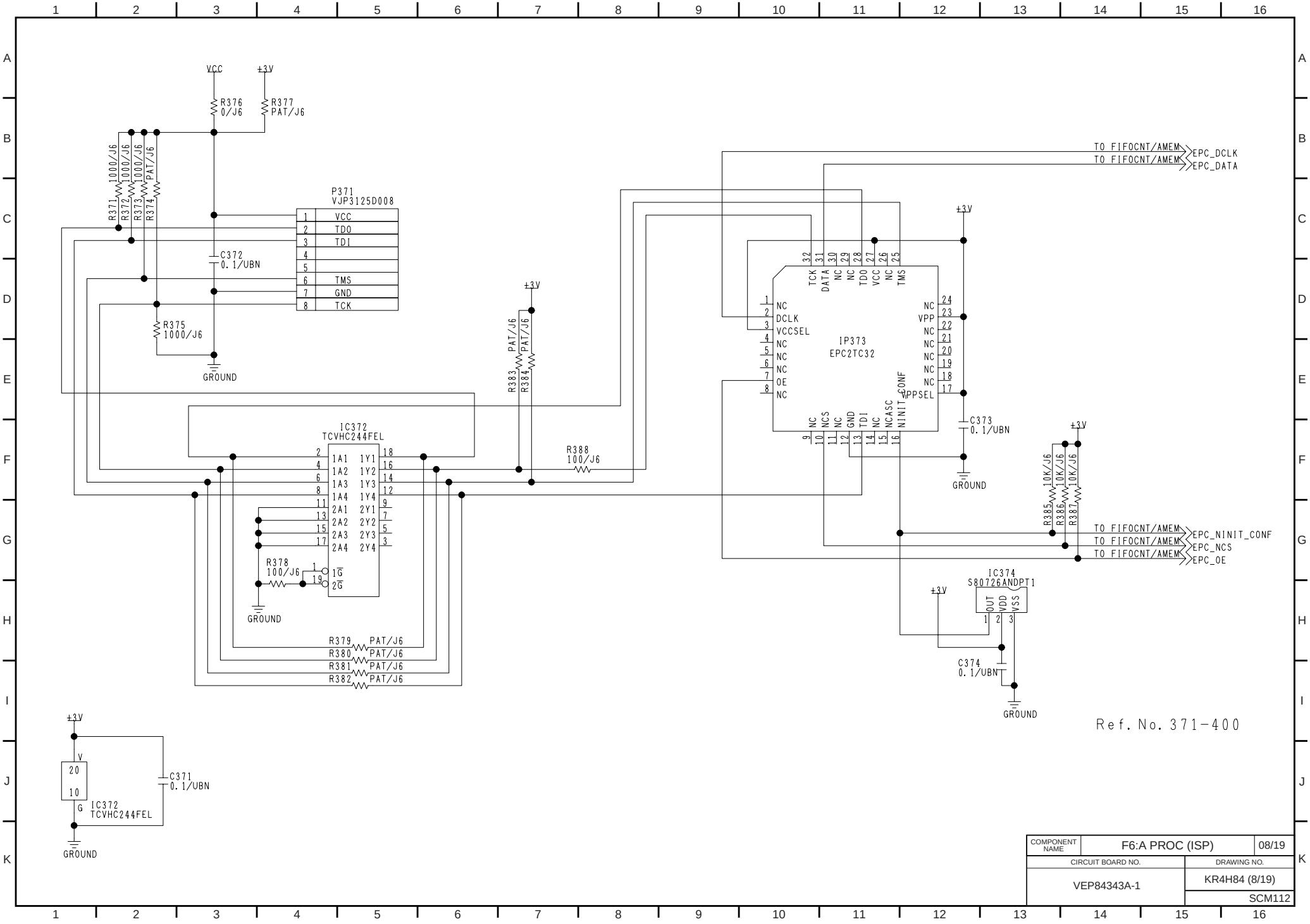

COMPONENT NAME	F6:A PROC (ISP)	08/19
CIRCUIT BOARD NO.	DRAWING NO.	
VEP84343A-1	KR4H84 (8/19)	
	SCM112	

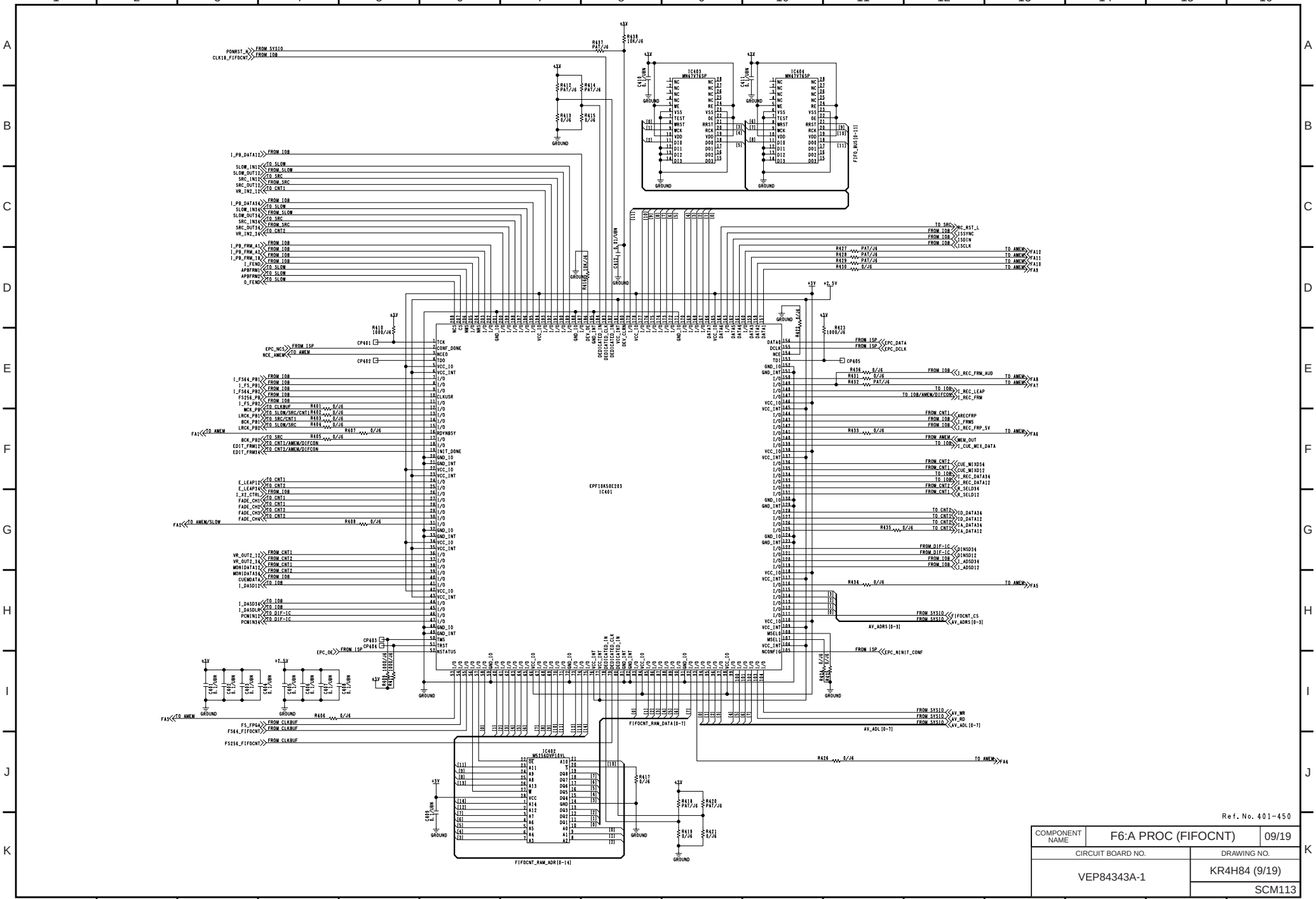

Ref. No. 401-450

COMPONENT NAME	F6:A PROC (FIFOCNT)	09/19
CIRCUIT BOARD NO.		DRAWING NO.
VEP84343A-1		KR4H84 (9/19)
		SCM113

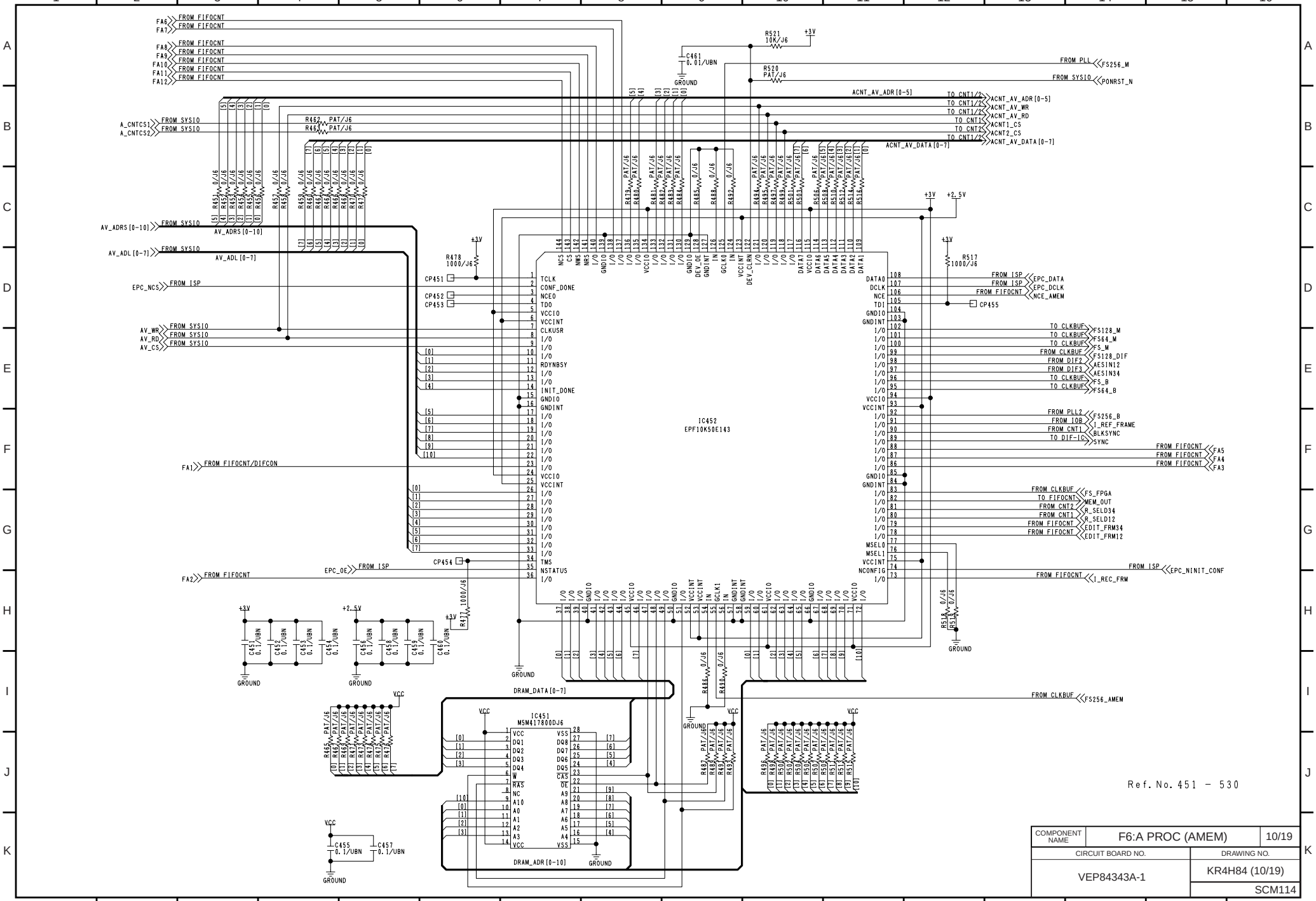

COMPONENT NAME	F6:A PROC (AMEM)	10/19
CIRCUIT BOARD NO.	DRAWING NO.	
VEP84343A-1	KR4H84 (10/19)	
	SCM114	

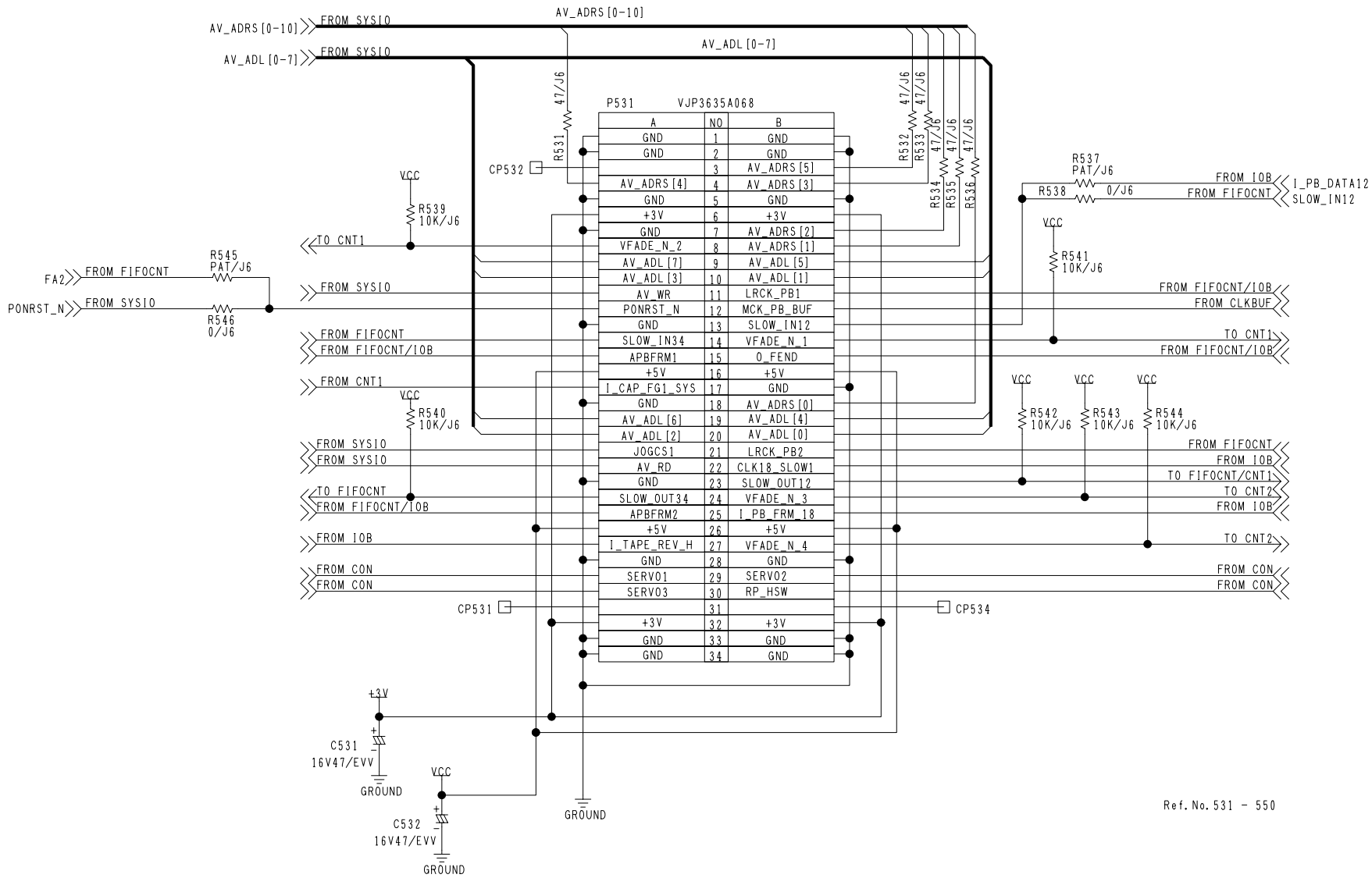

COMPONENT NAME	F6:A PROC (SLOW)	11/19
CIRCUIT BOARD NO.		DRAWING NO.
VEP84343A-1		KR4H84 (11/19)
		SCM115

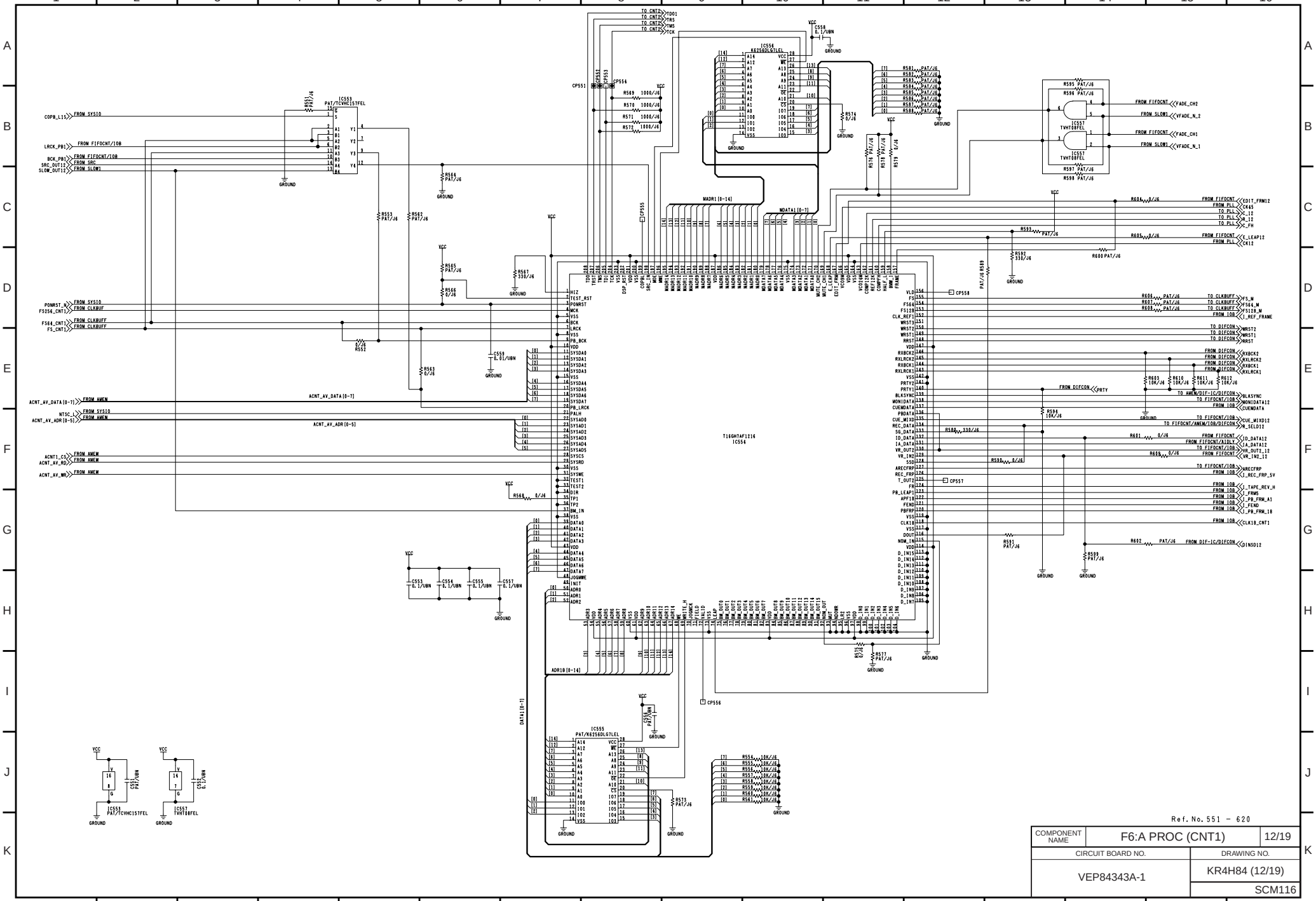

Ref. No. 551 - 620

COMPONENT NAME	F6:A PROC (CNT1)	12/19
CIRCUIT BOARD NO.		DRAWING NO.
VEP84343A-1		KR4H84 (12/19)
		SCM116

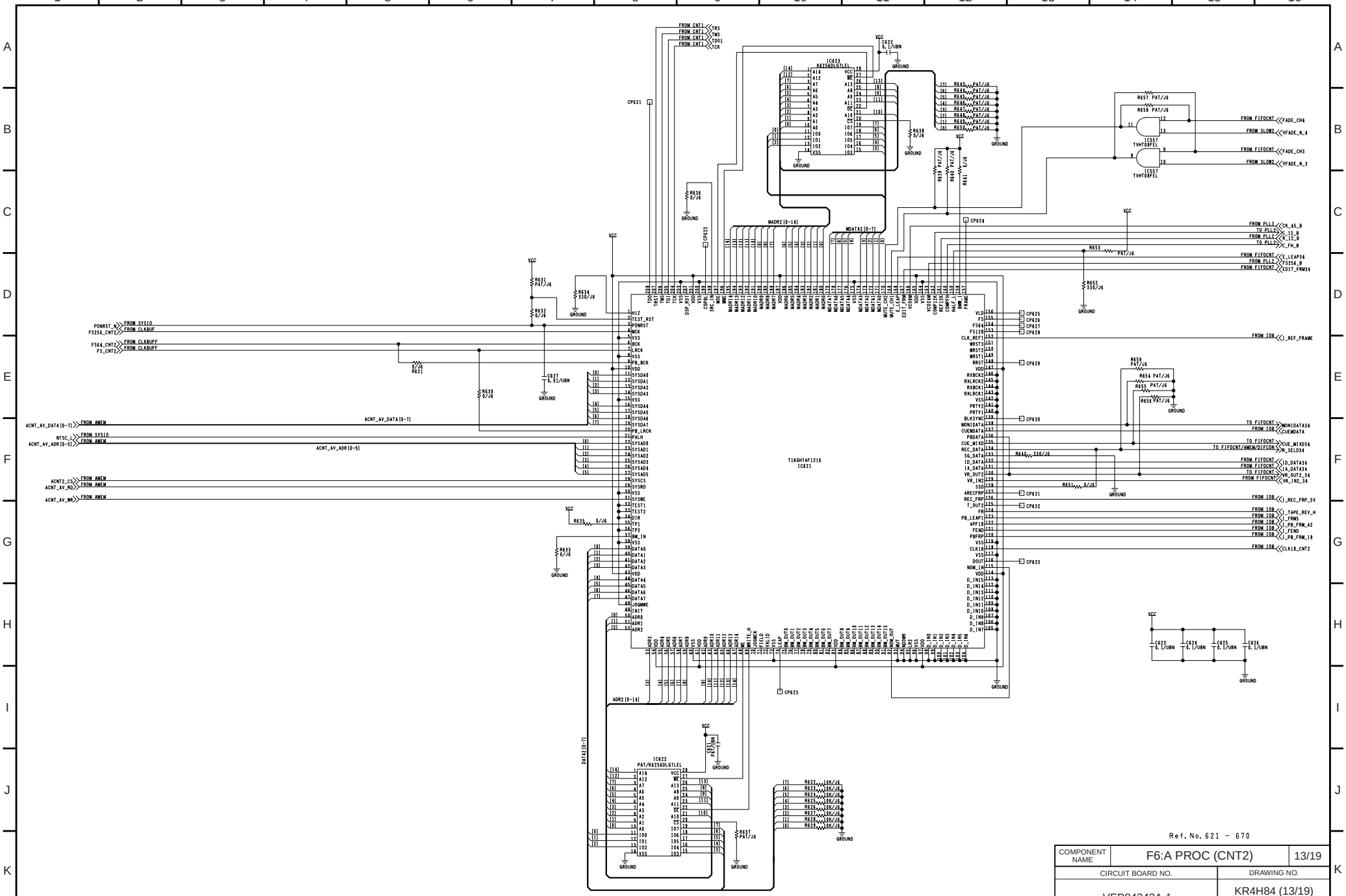

Ref. No. 621 - 670

COMPONENT NAME	F6:A PROC (CNT2)	13/19
CIRCUIT BOARD NO.		DRAWING NO.
VEP84343A-1		KR4H84 (13/19)
		SCM117

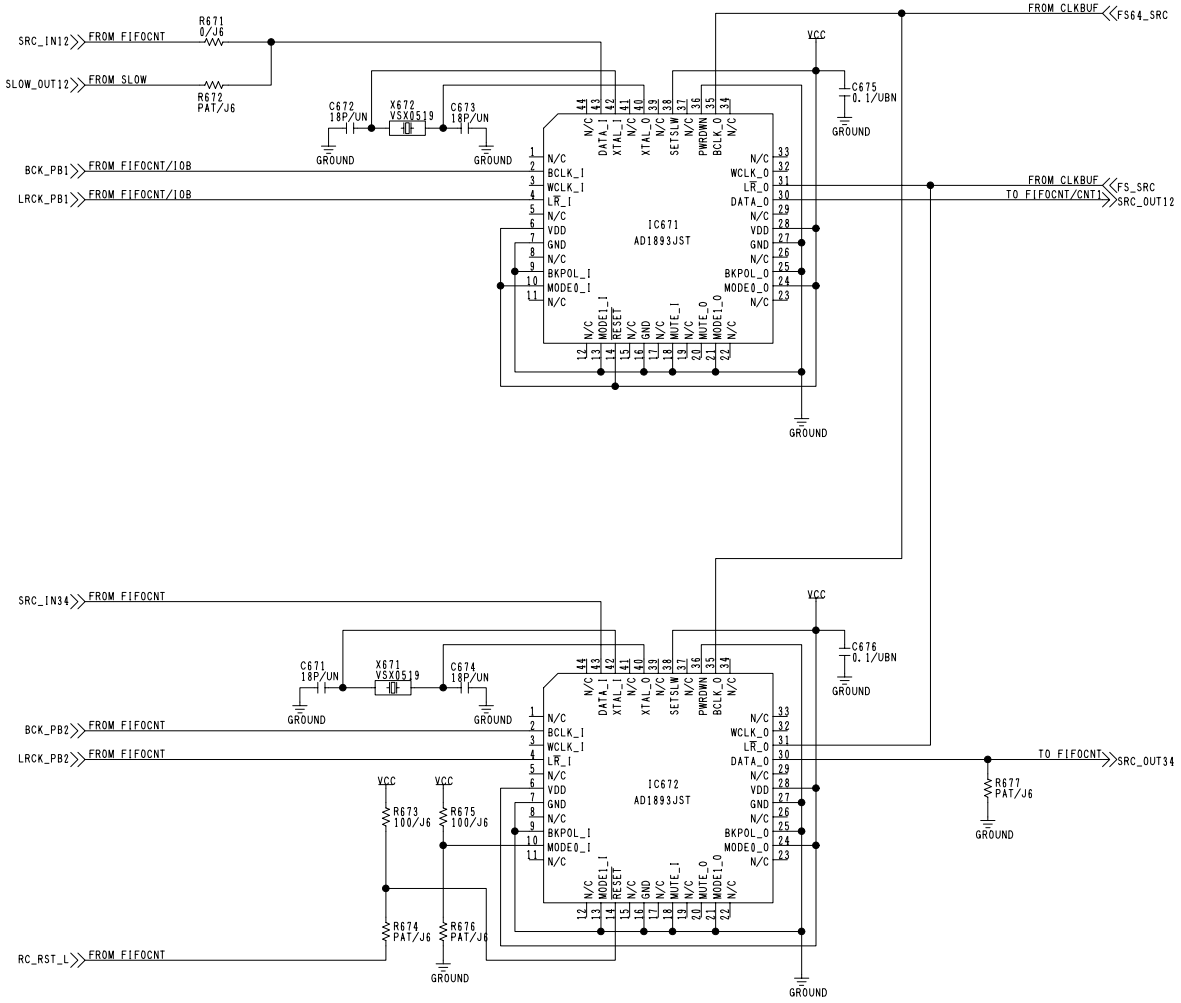

Ref. No. 671-690

COMPONENT NAME	F6:A PROC (SRC)	14/19
CIRCUIT BOARD NO.		DRAWING NO.
VEP84343A-1		KR4H84 (14/19)
		SCM118

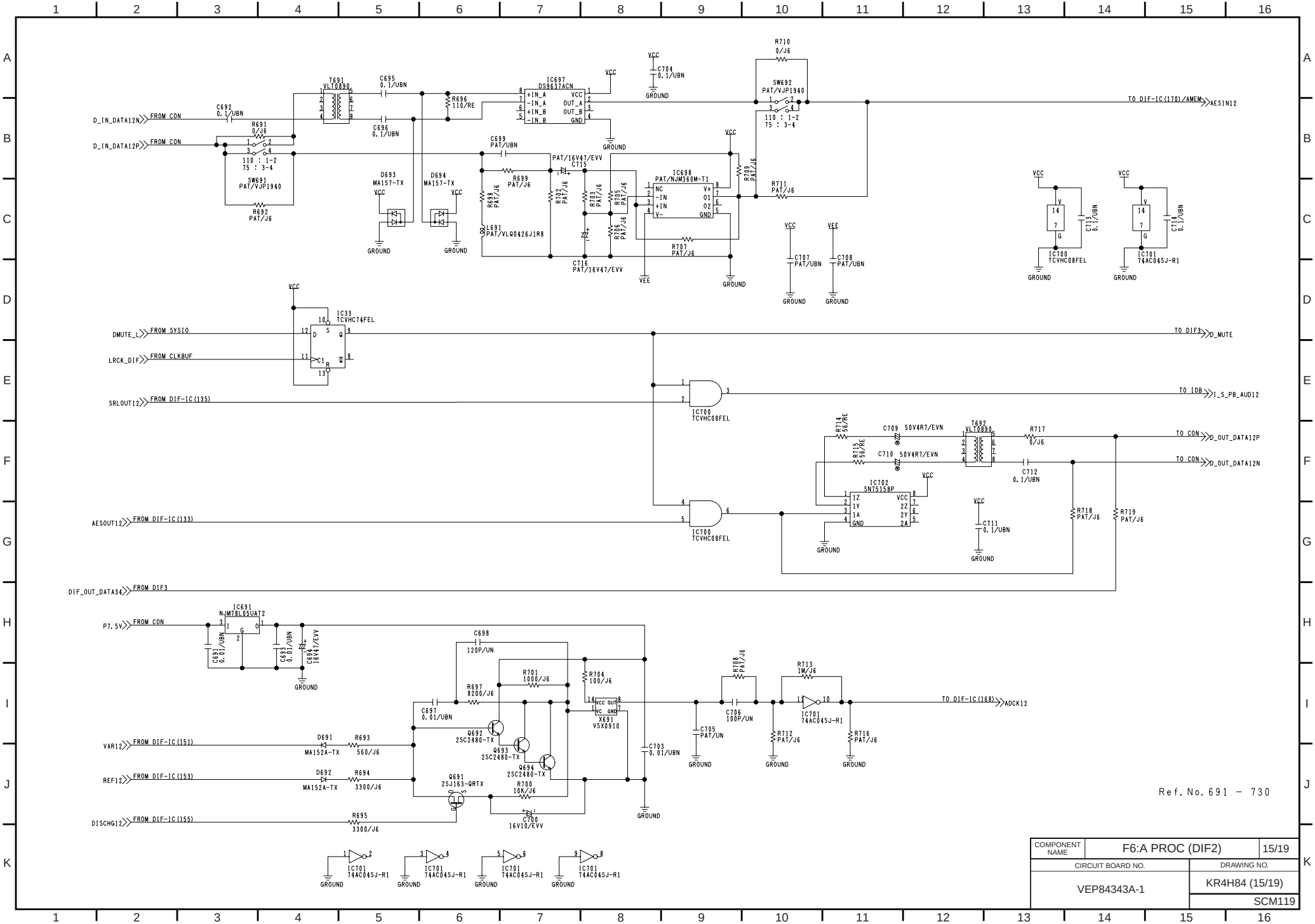

COMPONENT NAME	F6:A PROC (DIF2)	15/19
CIRCUIT BOARD NO.		DRAWING NO.
VEP84343A-1		KR4H84 (15/19)
		SCM119

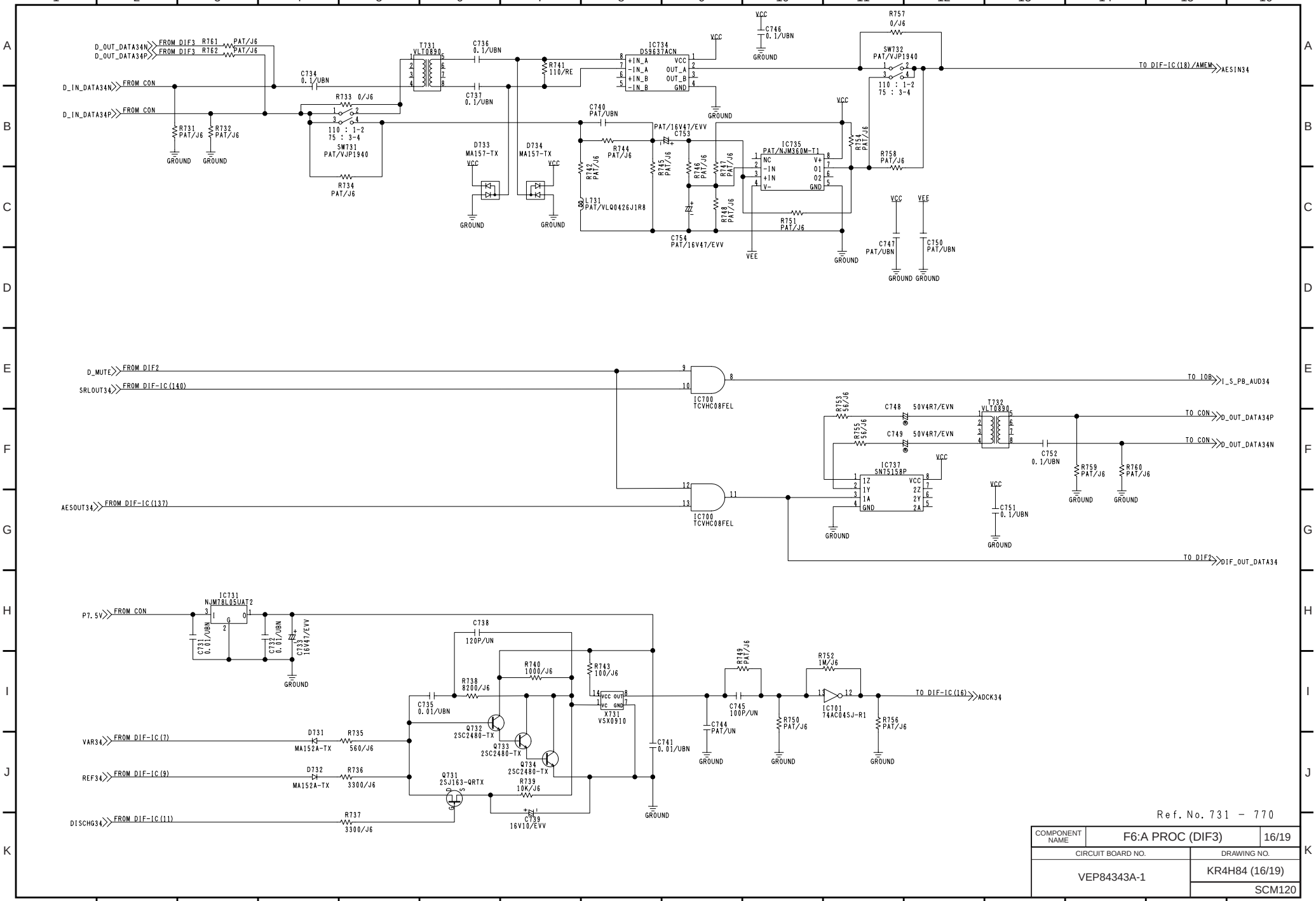

Ref. No. 731 - 770

COMPONENT NAME	F6:A PROC (DIF3)	16/19
CIRCUIT BOARD NO.	DRAWING NO.	
VEP84343A-1	KR4H84 (16/19)	
	SCM120	

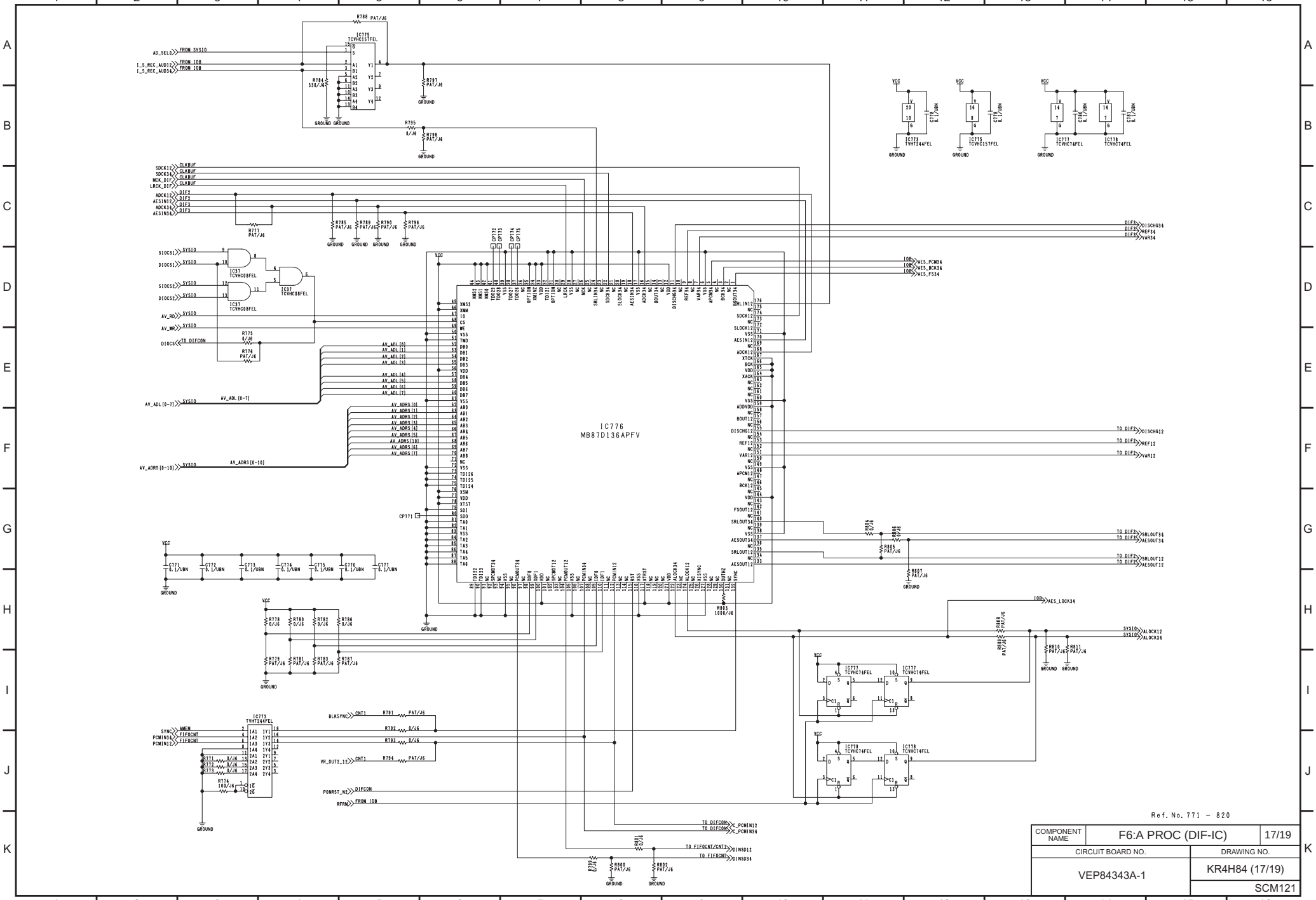
IC776
MB87D136APFV
IC775
TCVHC157FEL
IC773
TVHT244FEL
IC777
TCVHC74FEL
IC778
TCVHC74FEL
IC37
TCVHC08FEL
Ref. No. 771 - 820
COMPONENT NAME
F6:A PROC (DIF-IC)
17/19
CIRCUIT BOARD NO.
VEP84343A-1
DRAWING NO.
KR4H84 (17/19)
SCM121

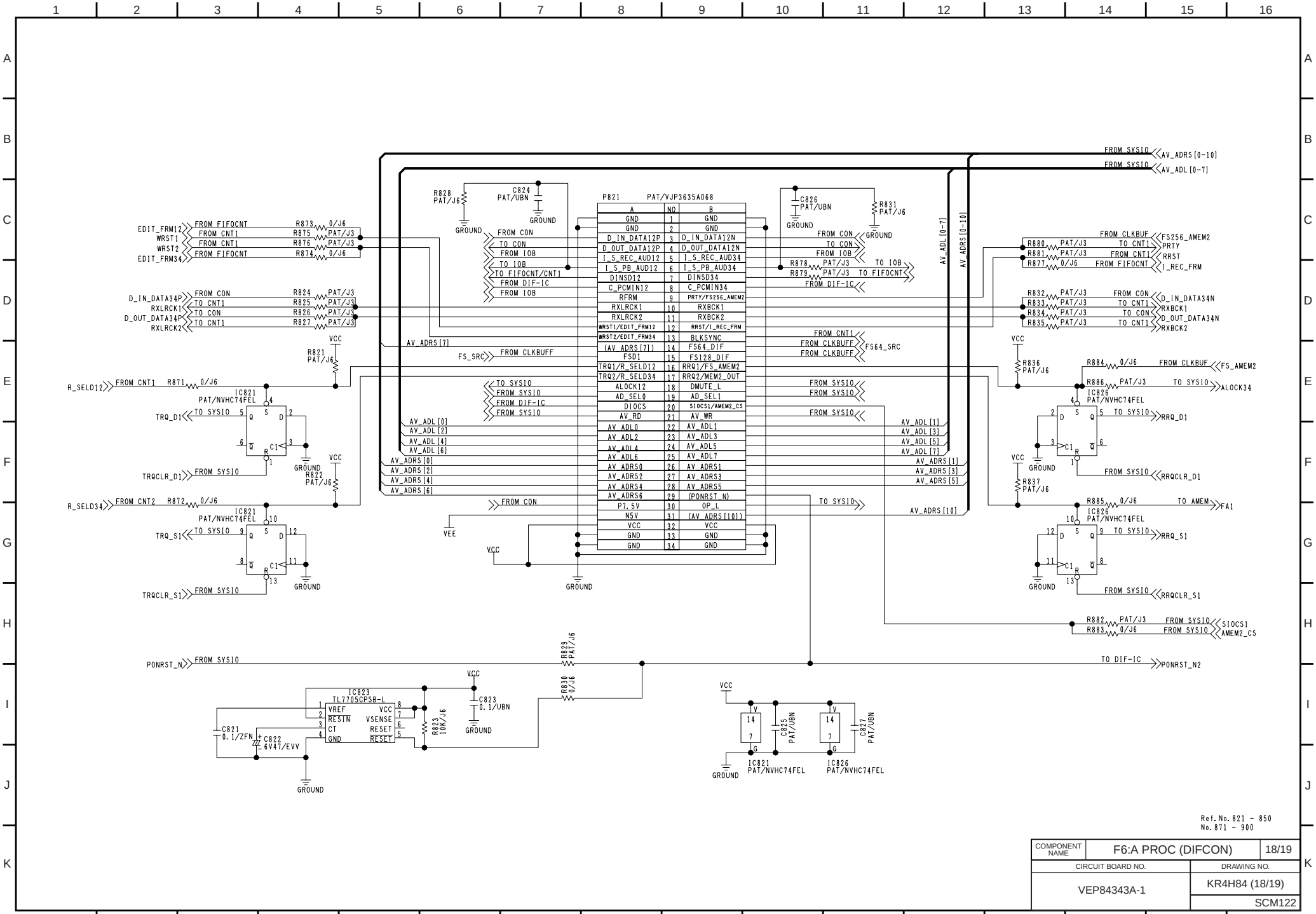

COMPONENT NAME	F6:A PROC (DIFCON)	18/19
CIRCUIT BOARD NO.	DRAWING NO.	
VEP84343A-1	KR4H84 (18/19)	
	SCM122	

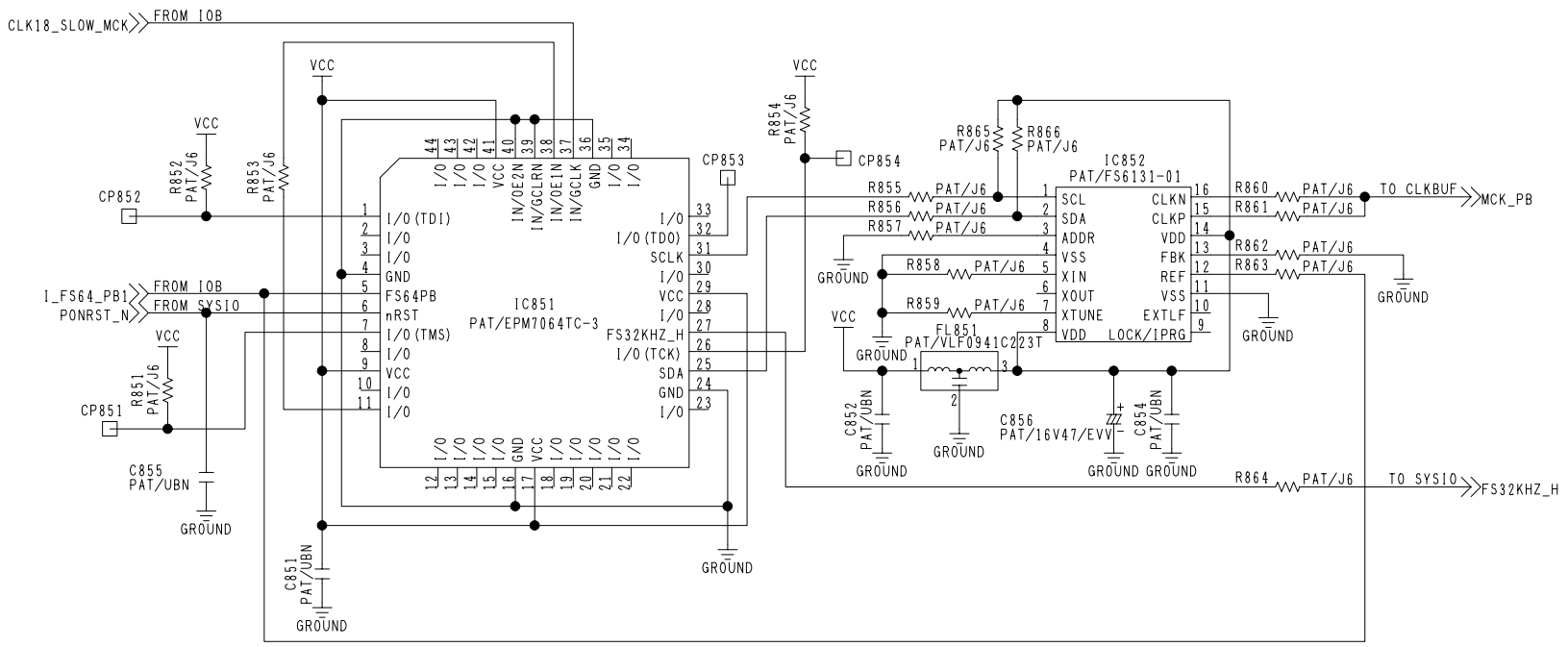

Ref. No. 851 - 870

COMPONENT NAME	F6:A PROC (SLOW_MCK)	19/19
CIRCUIT BOARD NO.		DRAWING NO.
VEP84343A-1		KR4H84 (19/19)
		SCM123

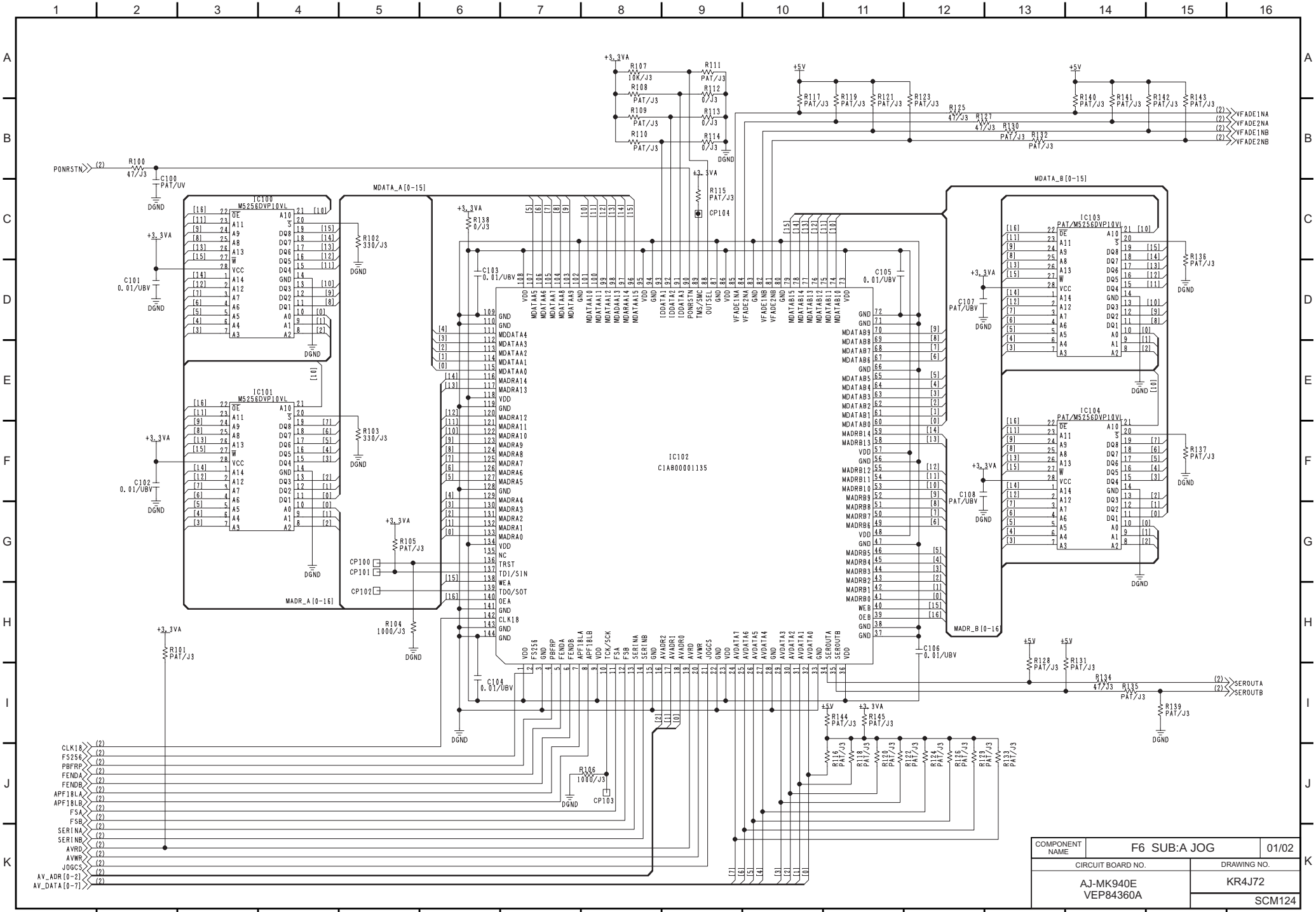

COMPONENT NAME	F6 SUB:A JOG	01/02
CIRCUIT BOARD NO.		DRAWING NO.
AJ-MK940E VEP84360A		KR4J72
		SCM124

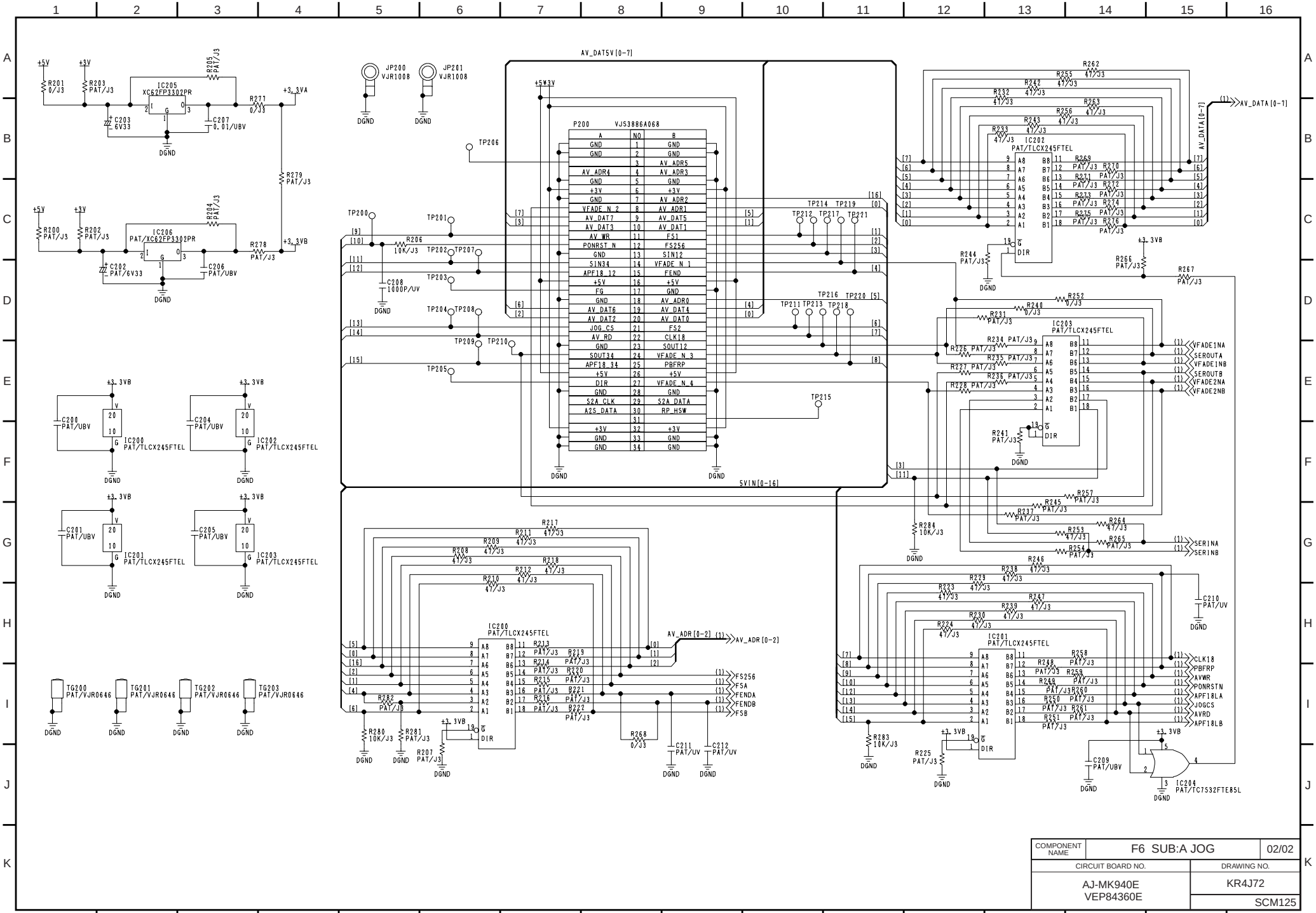

COMPONENT NAME	F6 SUB:A JOG	02/02
CIRCUIT BOARD NO.		DRAWING NO.
AJ-MK940E VEP84360E		KR4J72
		SCM125

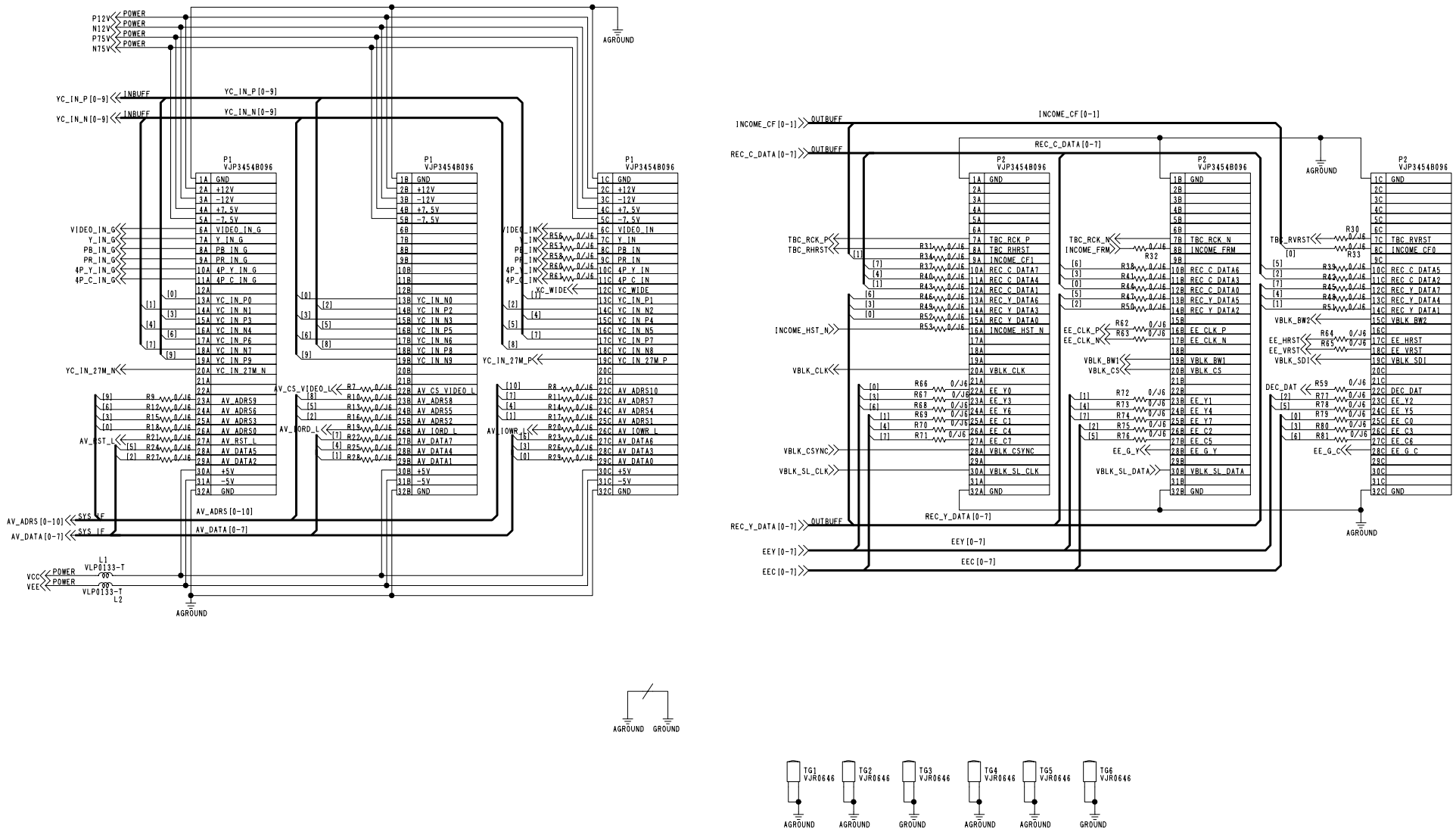

COMPONENT NAME	V_IN_(NTSC)	01/21
CIRCUIT BOARD NO.		DRAWING NO.
VEP83409C		KR3V69 (1/21)
		SCM126

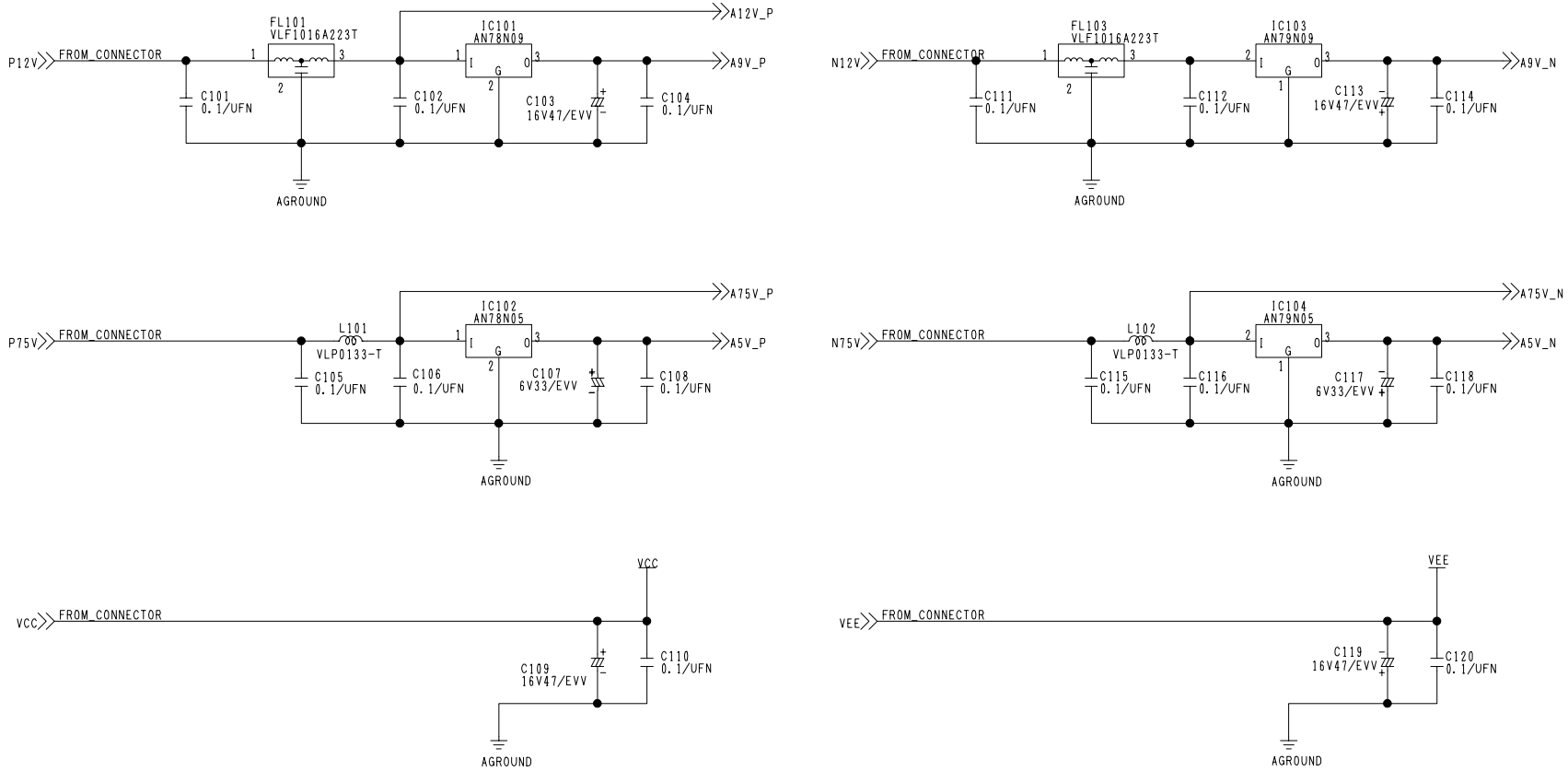

COMPONENT NAME	V_IN_(NTSC)	POWER	02/21
CIRCUIT BOARD NO.		DRAWING NO.	
VEP8309C		KR3V69(2/21)	
		SCM127	

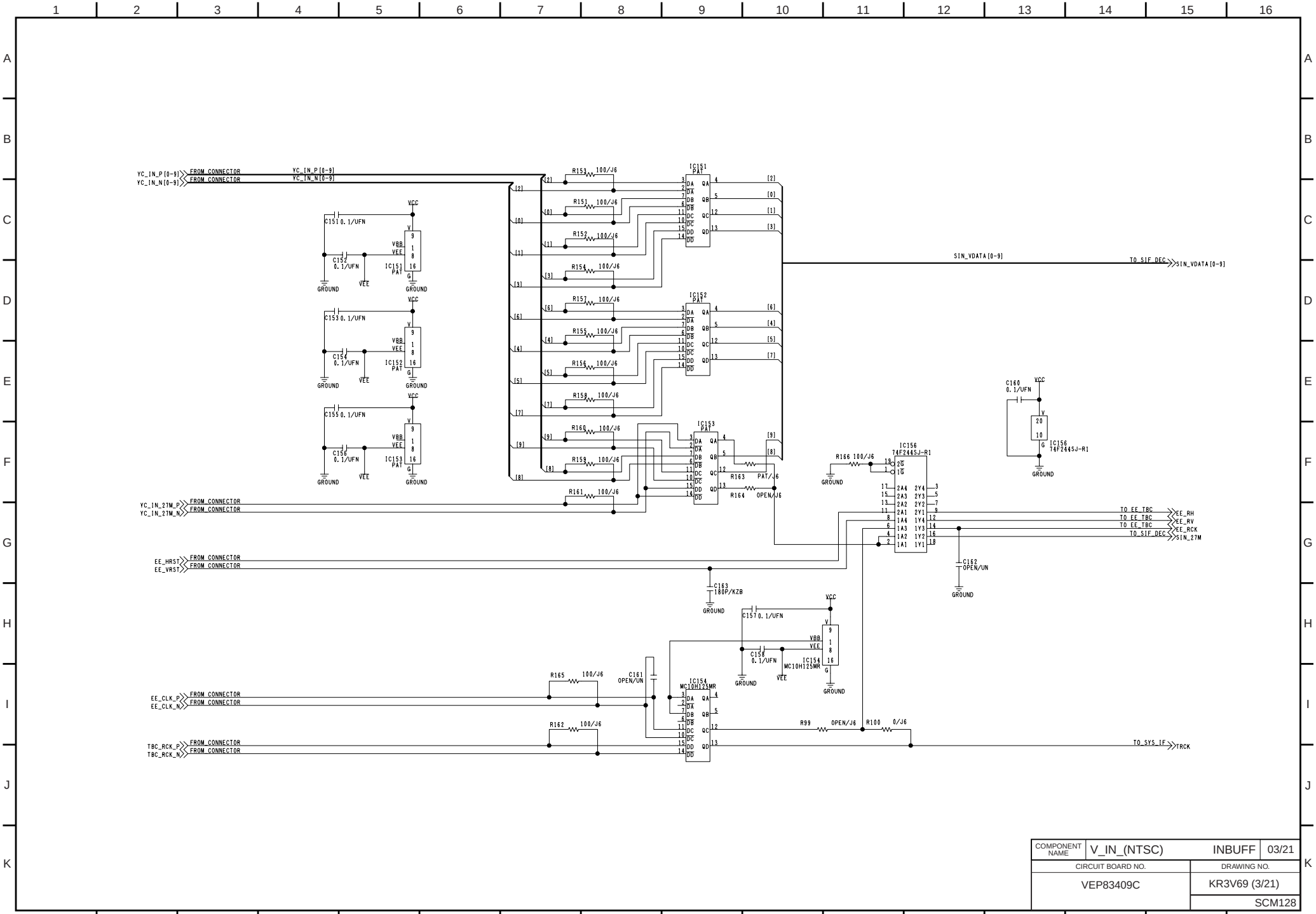

COMPONENT NAME	V_IN_(NTSC)	INBUFF	03/21
CIRCUIT BOARD NO.		DRAWING NO.	
VEP83409C		KR3V69 (3/21)	
		SCM128	

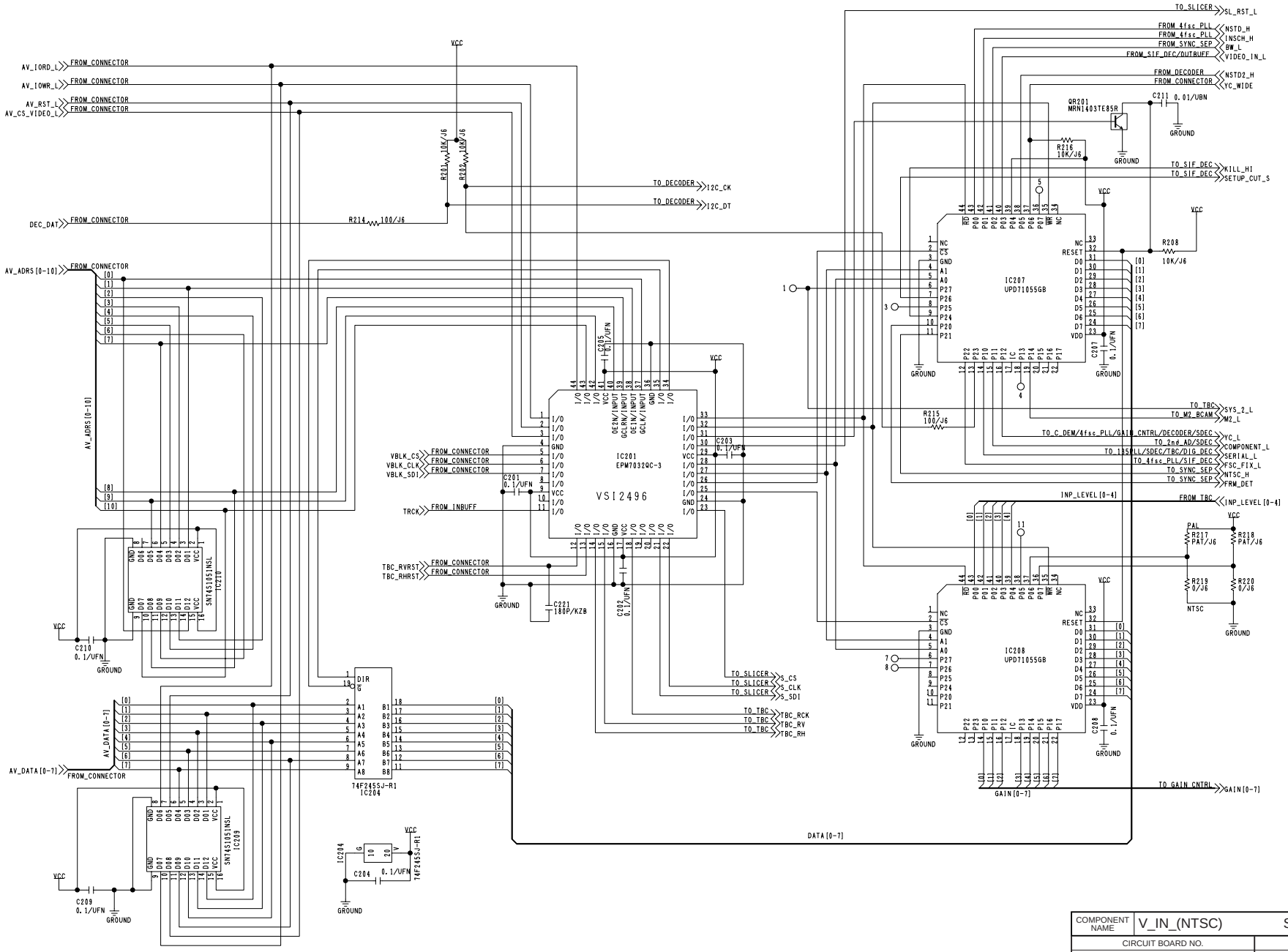

COMPONENT NAME	V_IN_(NTSC)	SYS_IF	04/21
CIRCUIT BOARD NO.		DRAWING NO.	
VEP83409C		KR3K69(4/21)	
		SCM129	

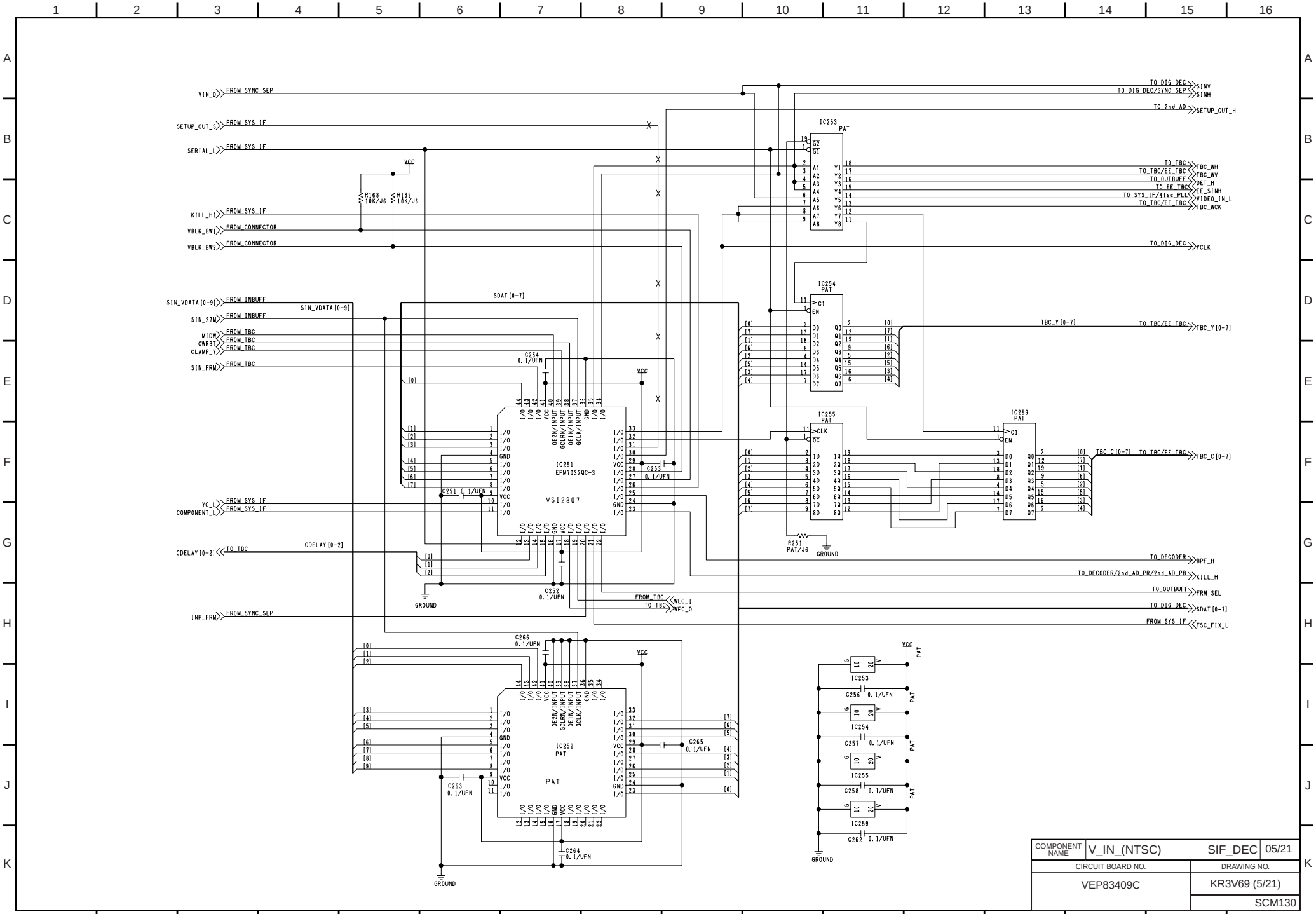

COMPONENT NAME	V_IN_(NTSC)	SIF_DEC	05/21
CIRCUIT BOARD NO.		DRAWING NO.	
VEP83409C		KR3V69 (5/21)	
		SCM130	

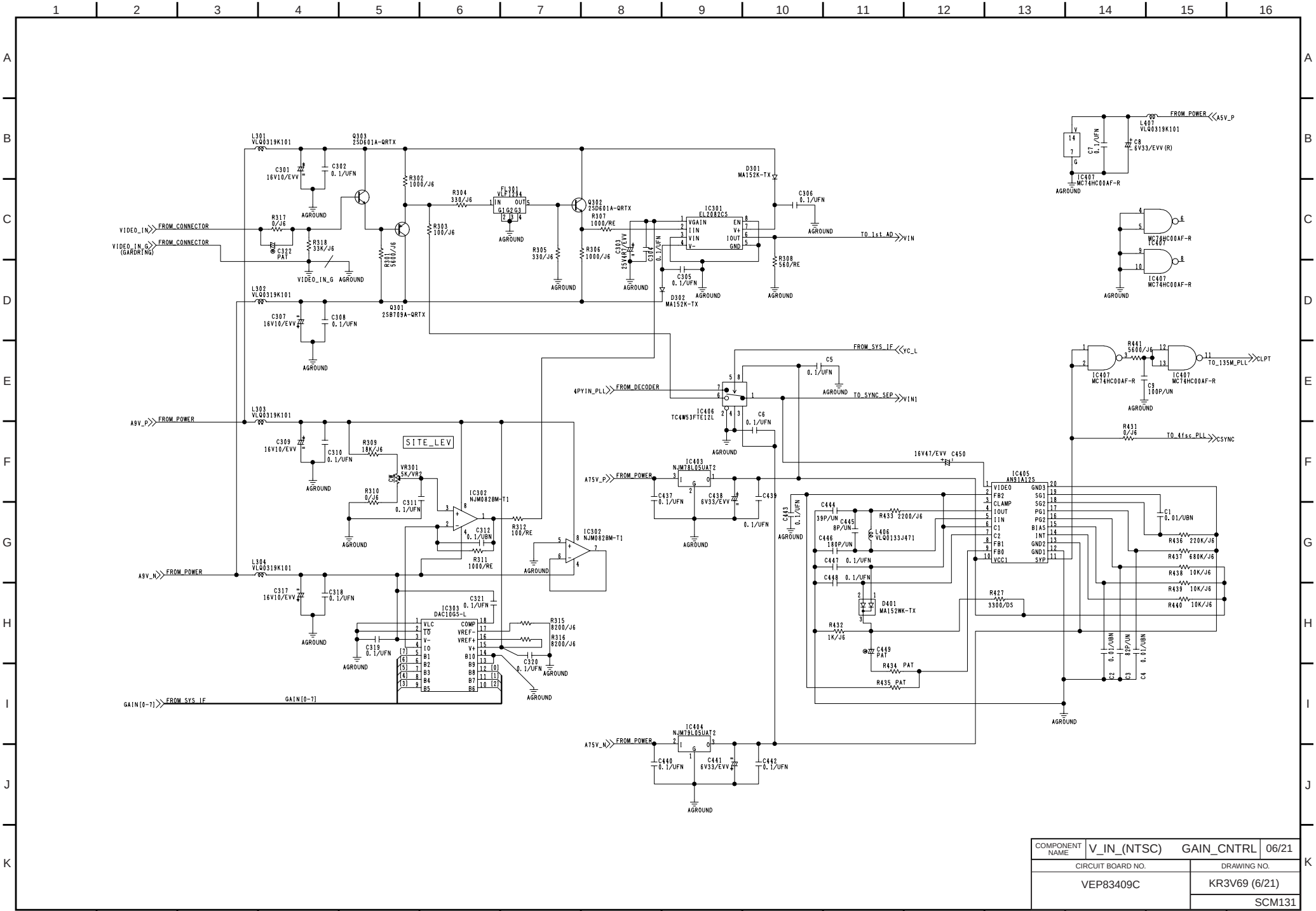

COMPONENT NAME	V_IN_(NTSC)	GAIN_CNTRL	06/21
CIRCUIT BOARD NO.		DRAWING NO.	
VEP83409C		KR3V69 (6/21)	
		SCM131	

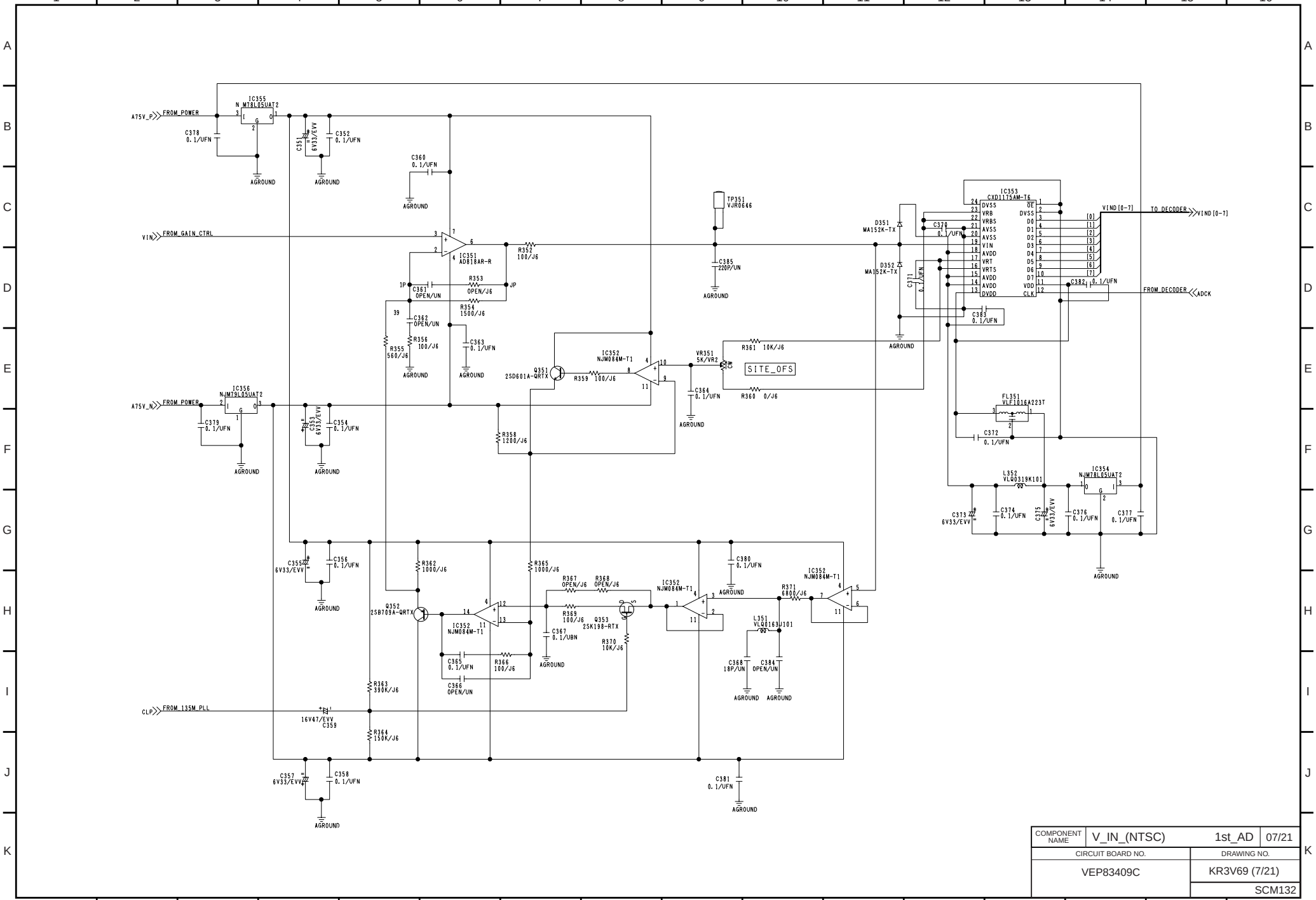

COMPONENT NAME	V_IN_(NTSC)	1st_AD	07/21
CIRCUIT BOARD NO.		DRAWING NO.	
VEP83409C		KR3V69 (7/21)	
		SCM132	

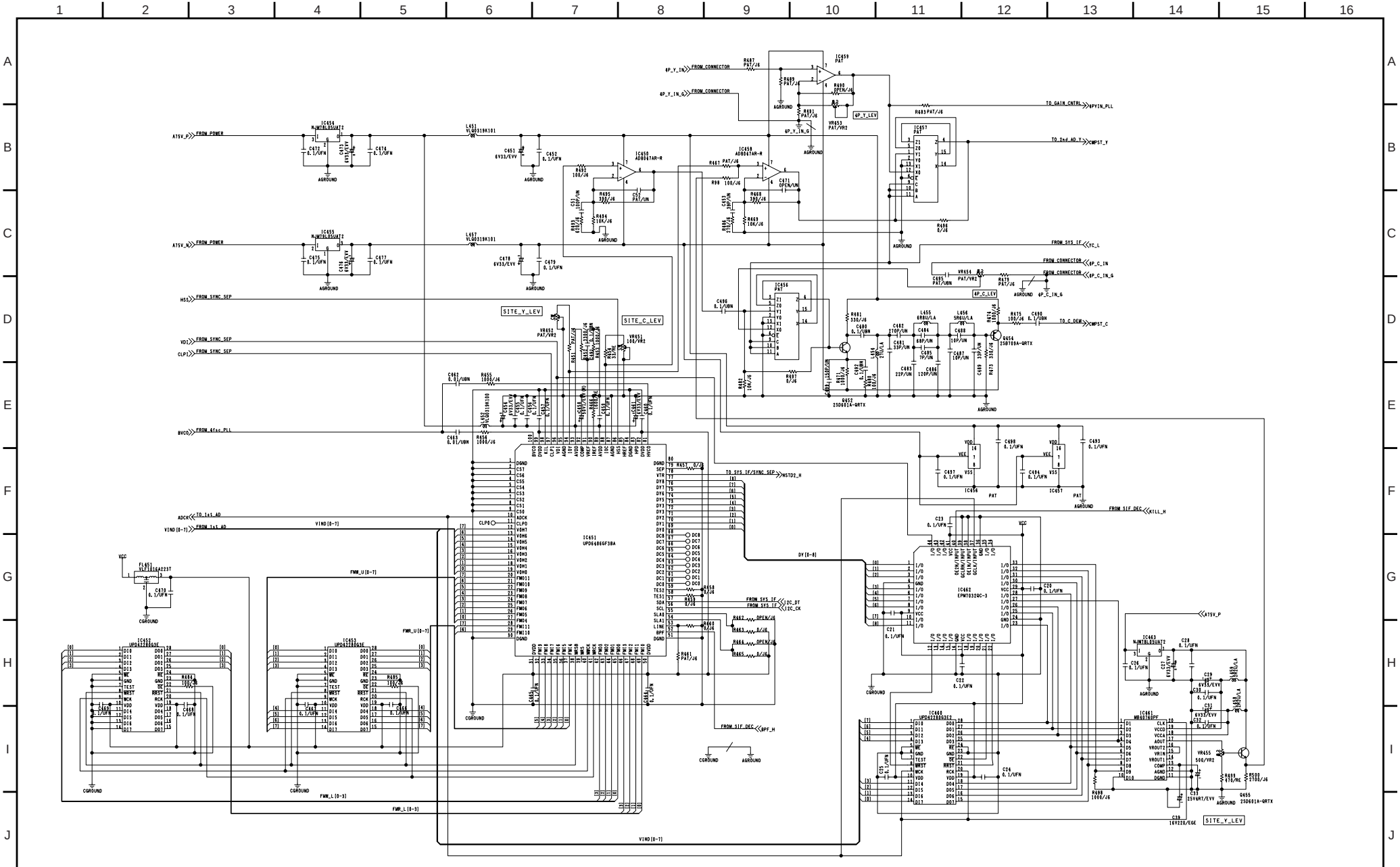

COMPONENT NAME	V_IN_(NTSC)	08/21
CIRCUIT BOARD NO.		DRAWING NO.
VEP83409C		KR3V69 (8/21)
		SCM133

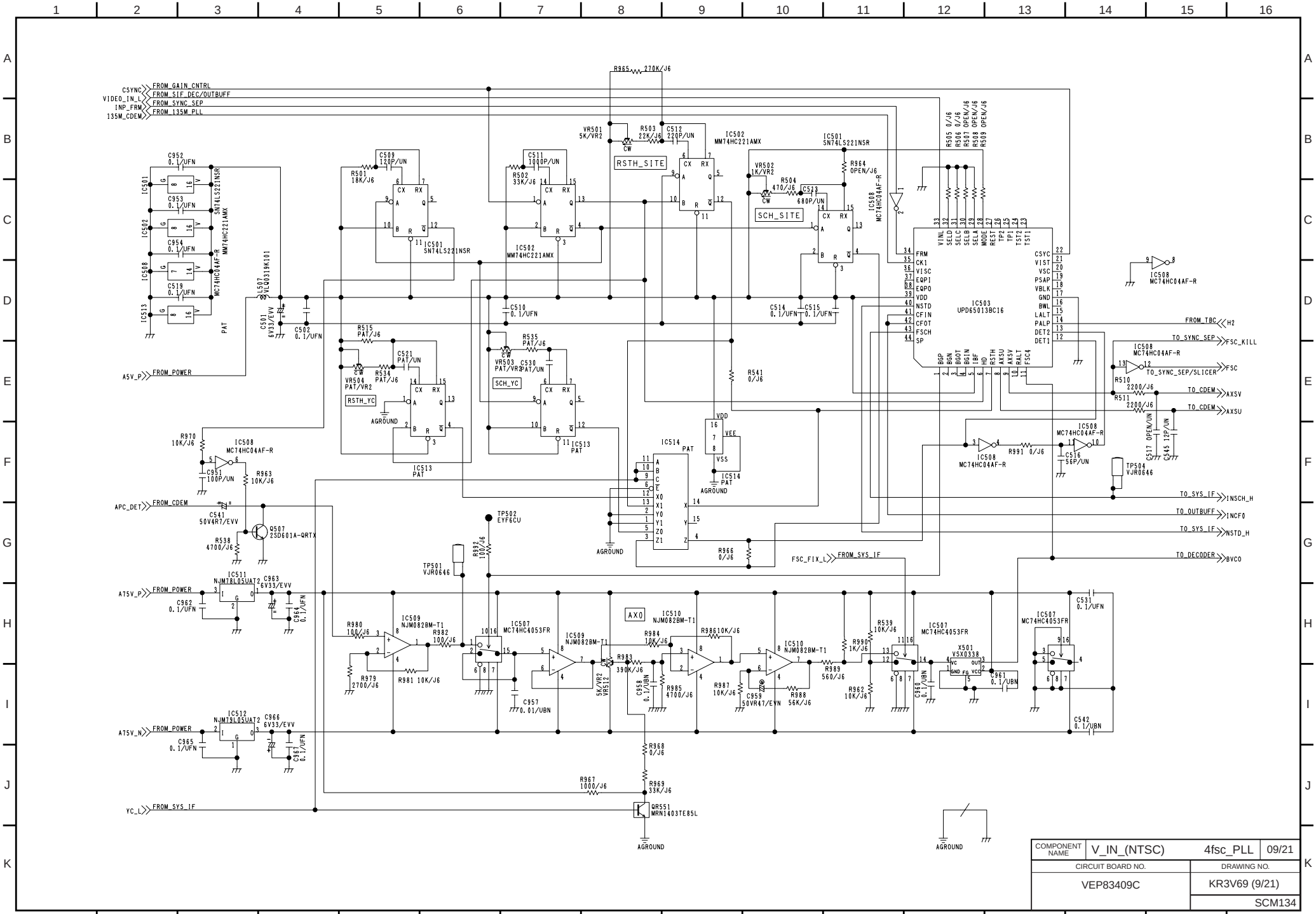

COMPONENT NAME	V_IN_(NTSC)	4fsc_PLL	09/21
CIRCUIT BOARD NO.		DRAWING NO.	
VEP83409C		KR3V69 (9/21)	
		SCM134	

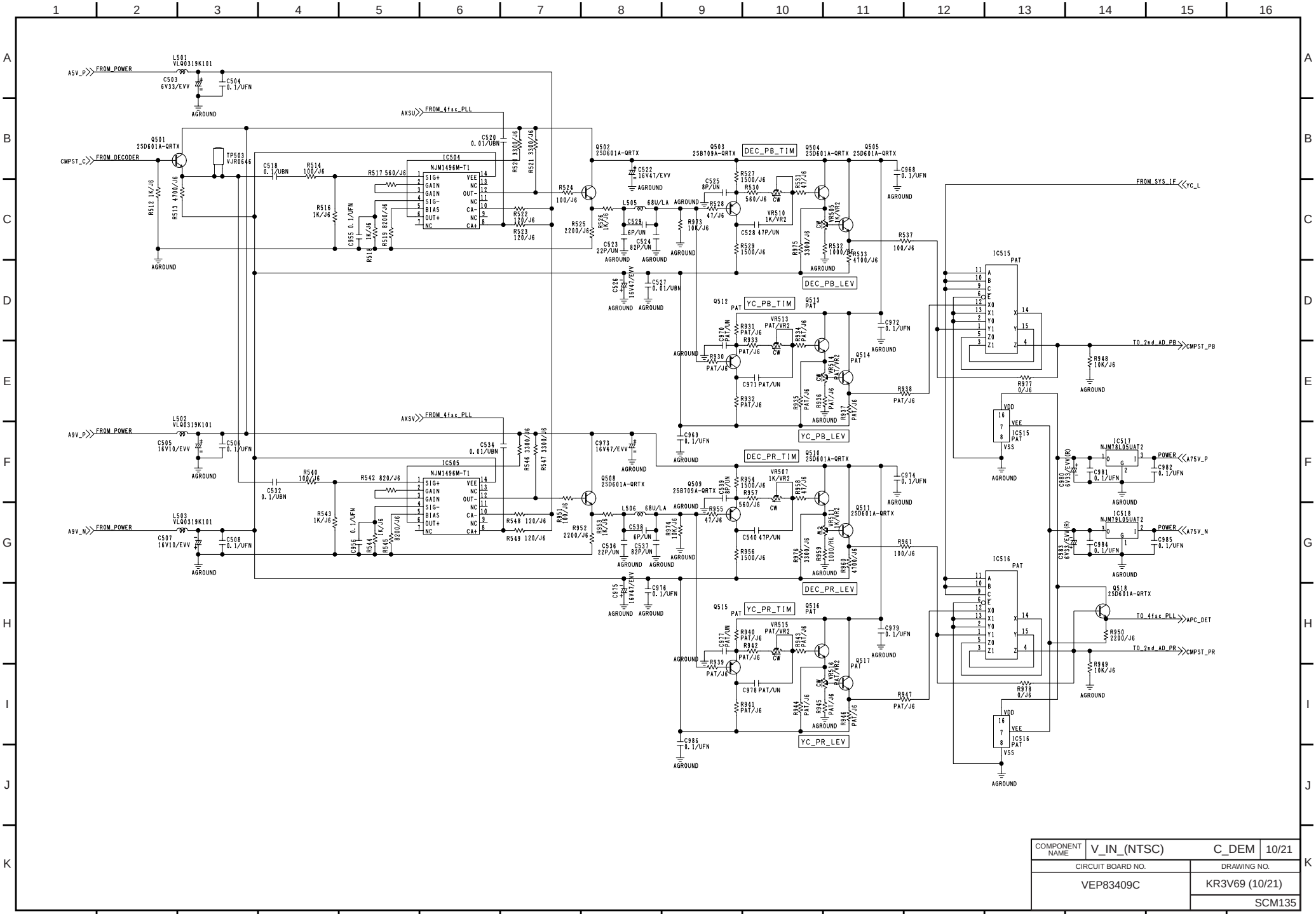

COMPONENT NAME	V_IN_(NTSC)	C_DEM	10/21
CIRCUIT BOARD NO.		DRAWING NO.	
VEP83409C		KR3V69 (10/21)	
		SCM135	

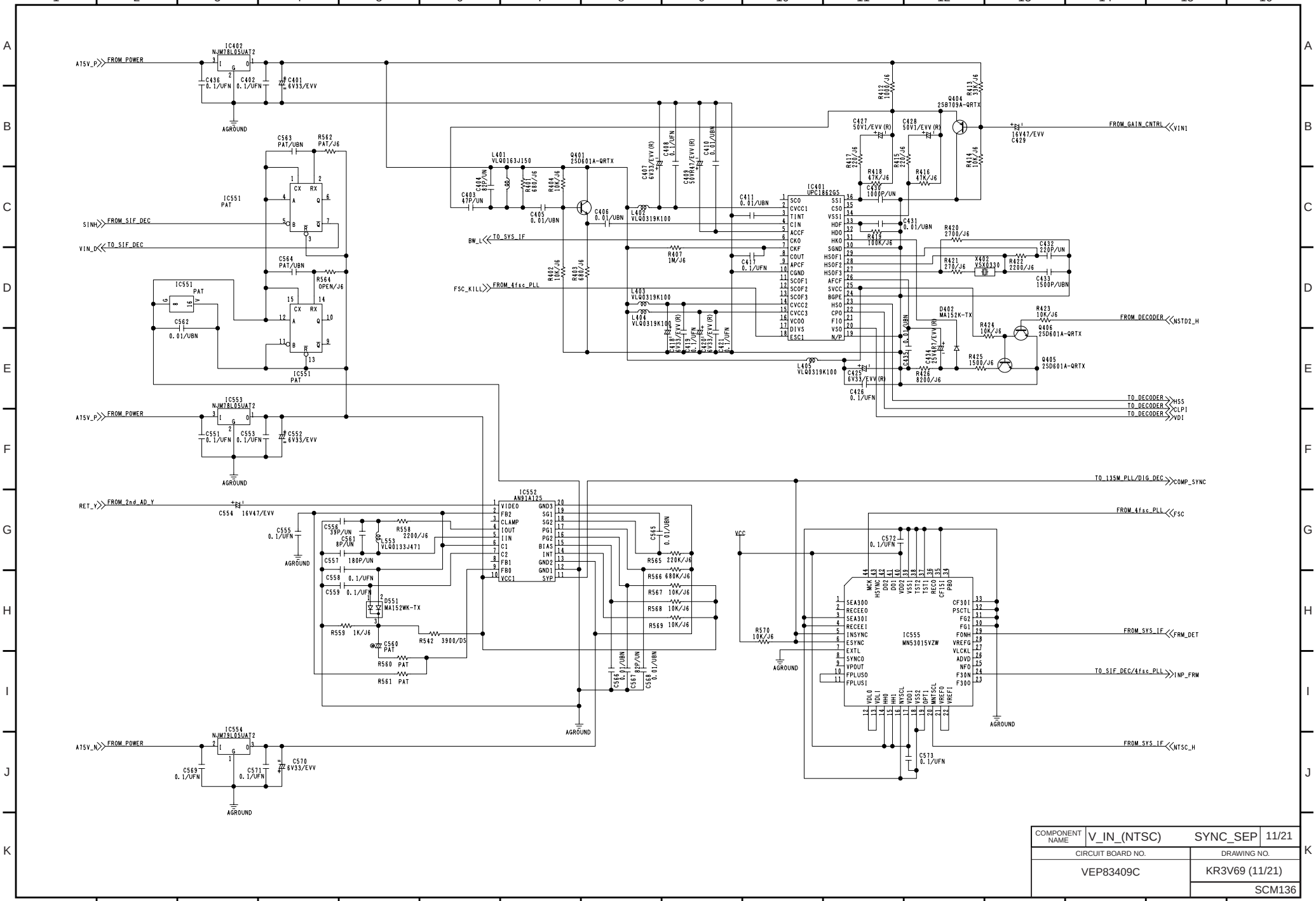

COMPONENT NAME	V_IN_(NTSC)	SYNC_SEP	11/21
CIRCUIT BOARD NO.		DRAWING NO.	
VEP83409C		KR3V69 (11/21)	
		SCM136	

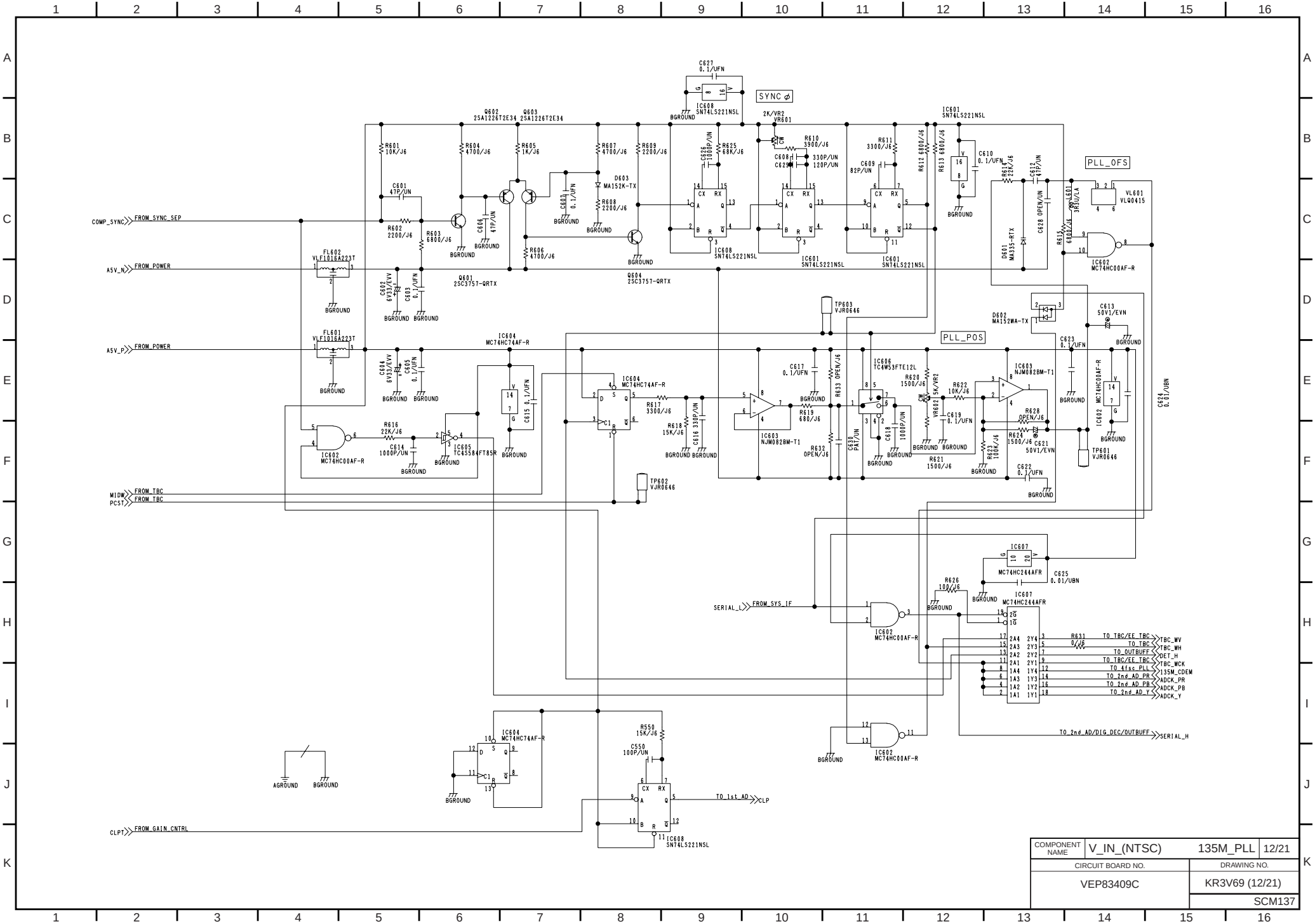

COMPONENT NAME	V_IN_(NTSC)	135M_PLL	12/21
CIRCUIT BOARD NO.		DRAWING NO.	
VEP83409C		KR3V69 (12/21)	
		SCM137	

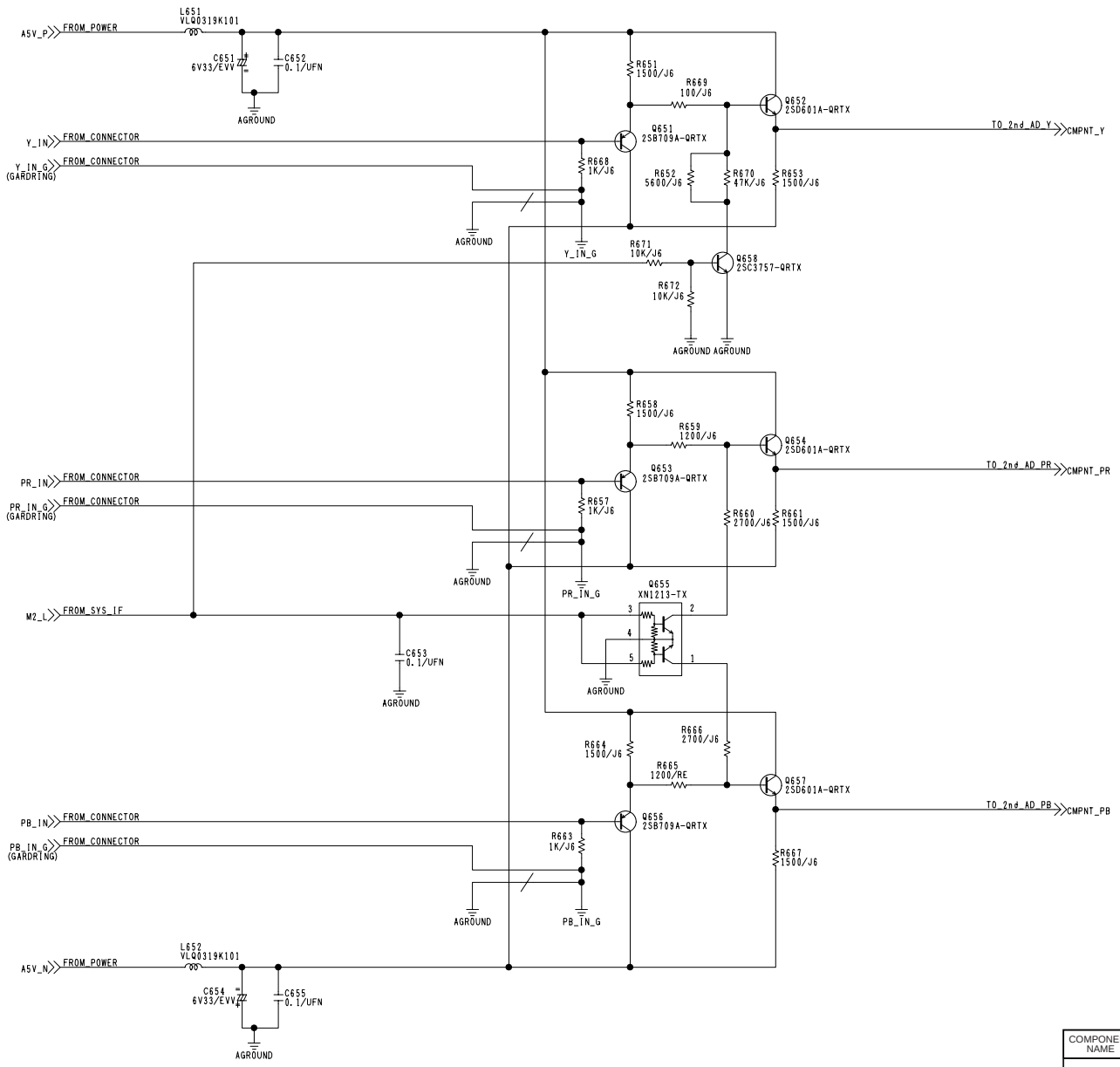

COMPONENT NAME	V_IN_(NTSC)M2_BCAM_SELECT	13/21
CIRCUIT BOARD NO.		DRAWING NO.
VEP83409C		KR3V69 (13/21)
		SCM138

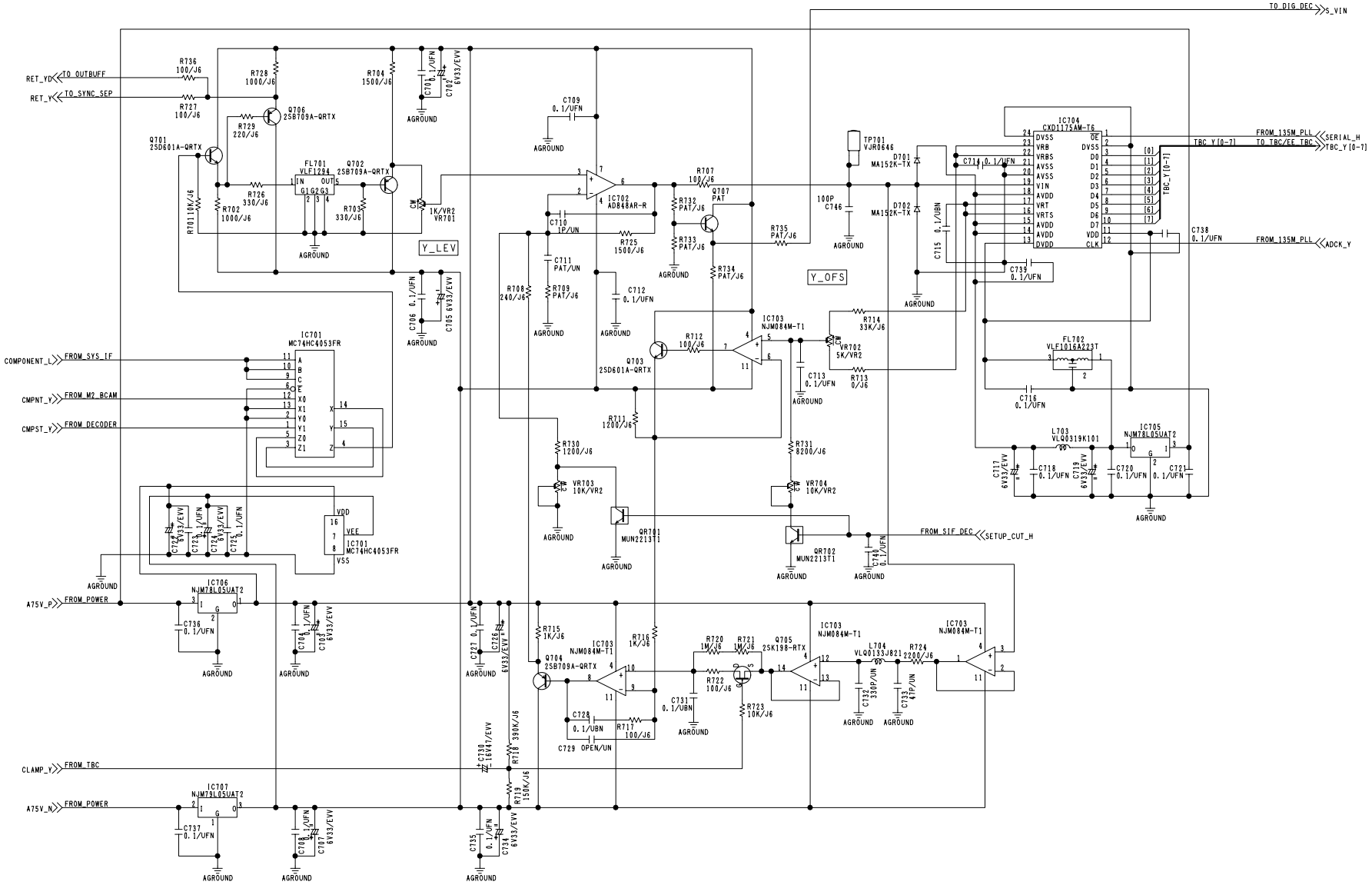

COMPONENT NAME	V_IN_(NTSC)	2nd_AD_Y	14/21
CIRCUIT BOARD NO.		DRAWING NO.	
VEP83409C		KR3V69 (14/21)	
		SCM139	

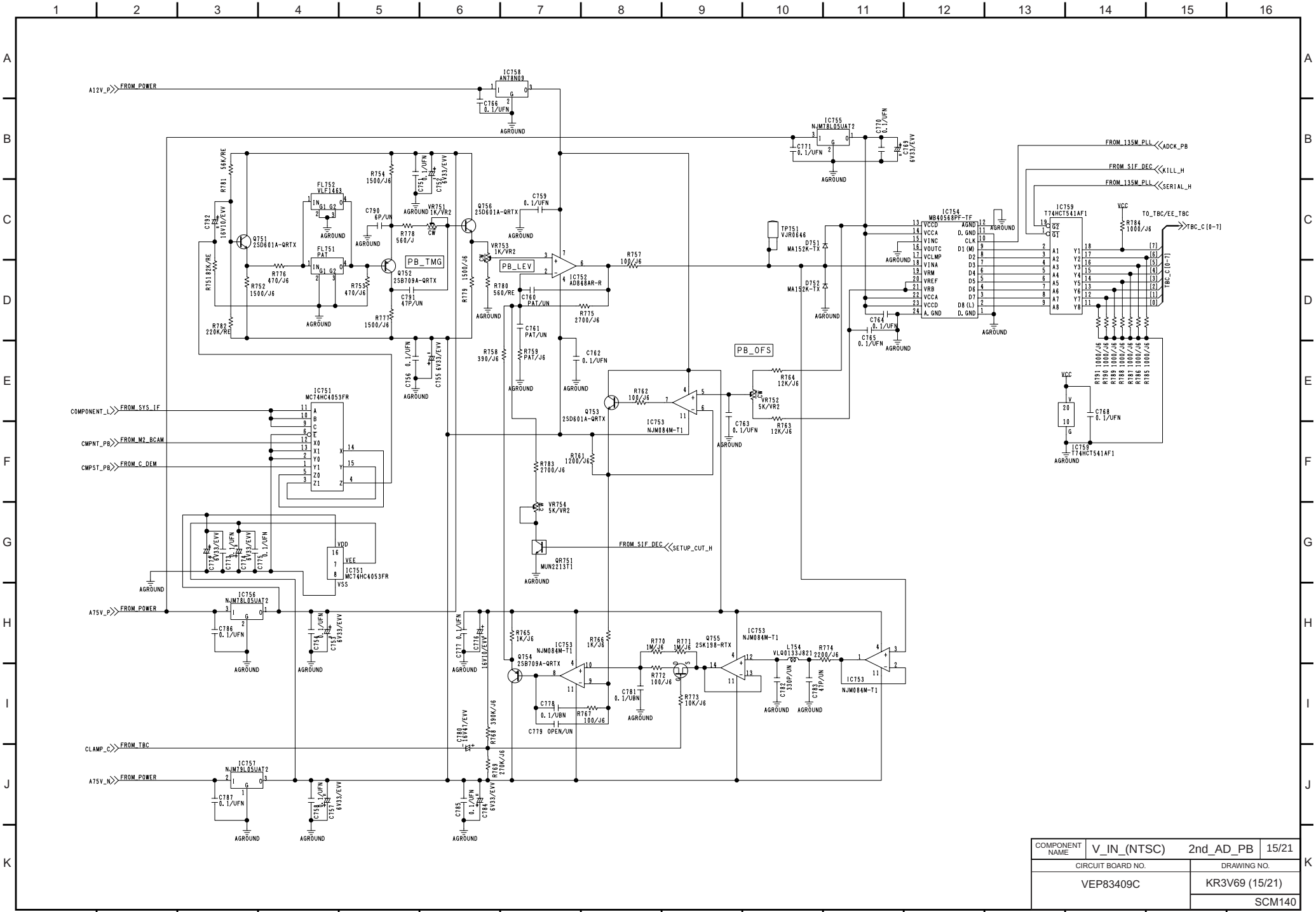

COMPONENT NAME	V_IN_(NTSC)	2nd_AD_PB	15/21
CIRCUIT BOARD NO.		DRAWING NO.	
VEP83409C		KR3V69 (15/21)	
		SCM140	

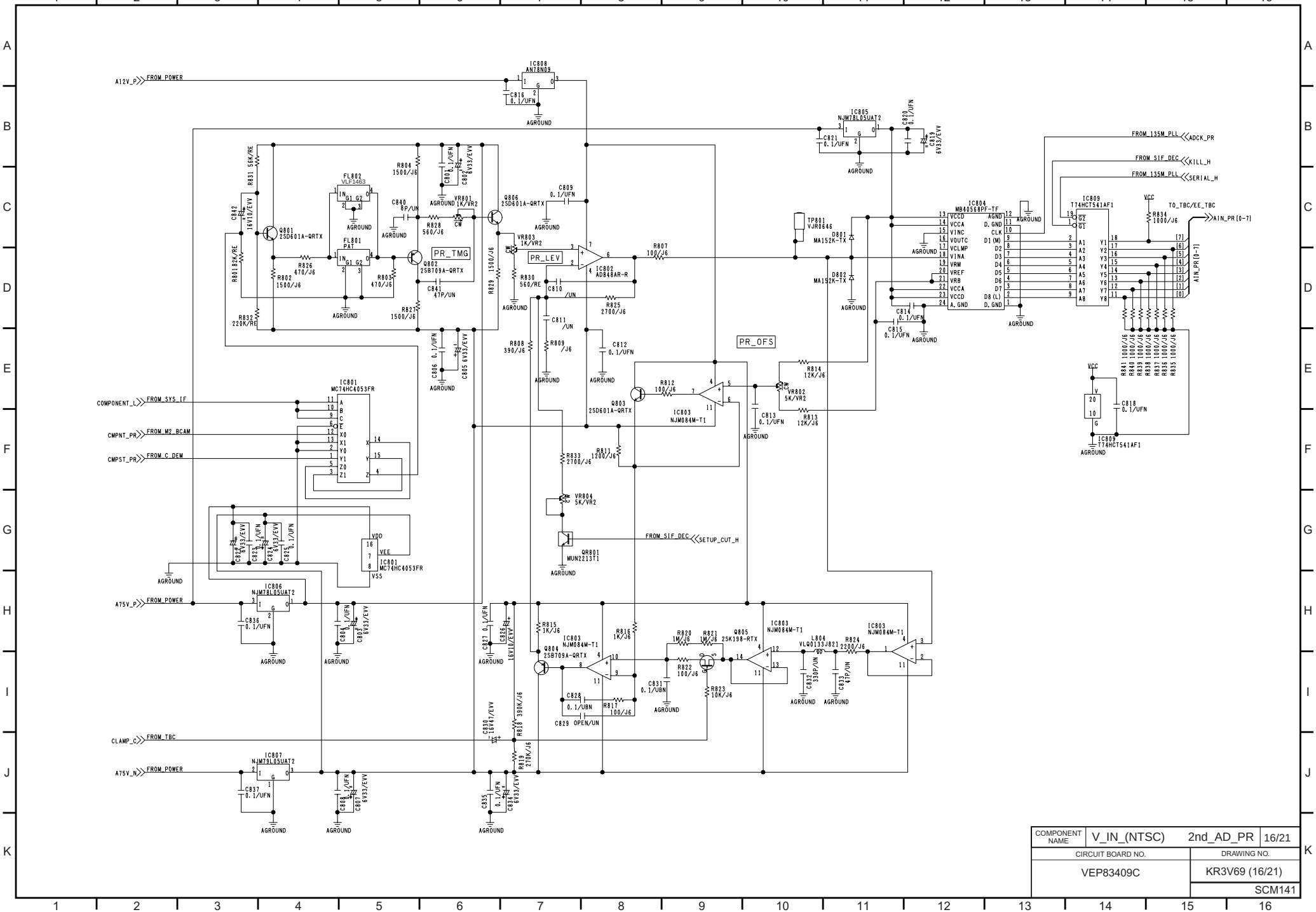

COMPONENT NAME	V_IN_(NTSC)	2nd_AD_PR	16/21
CIRCUIT BOARD NO.		DRAWING NO.	
VEP83409C		KR3V69 (16/21)	
		SCM141	

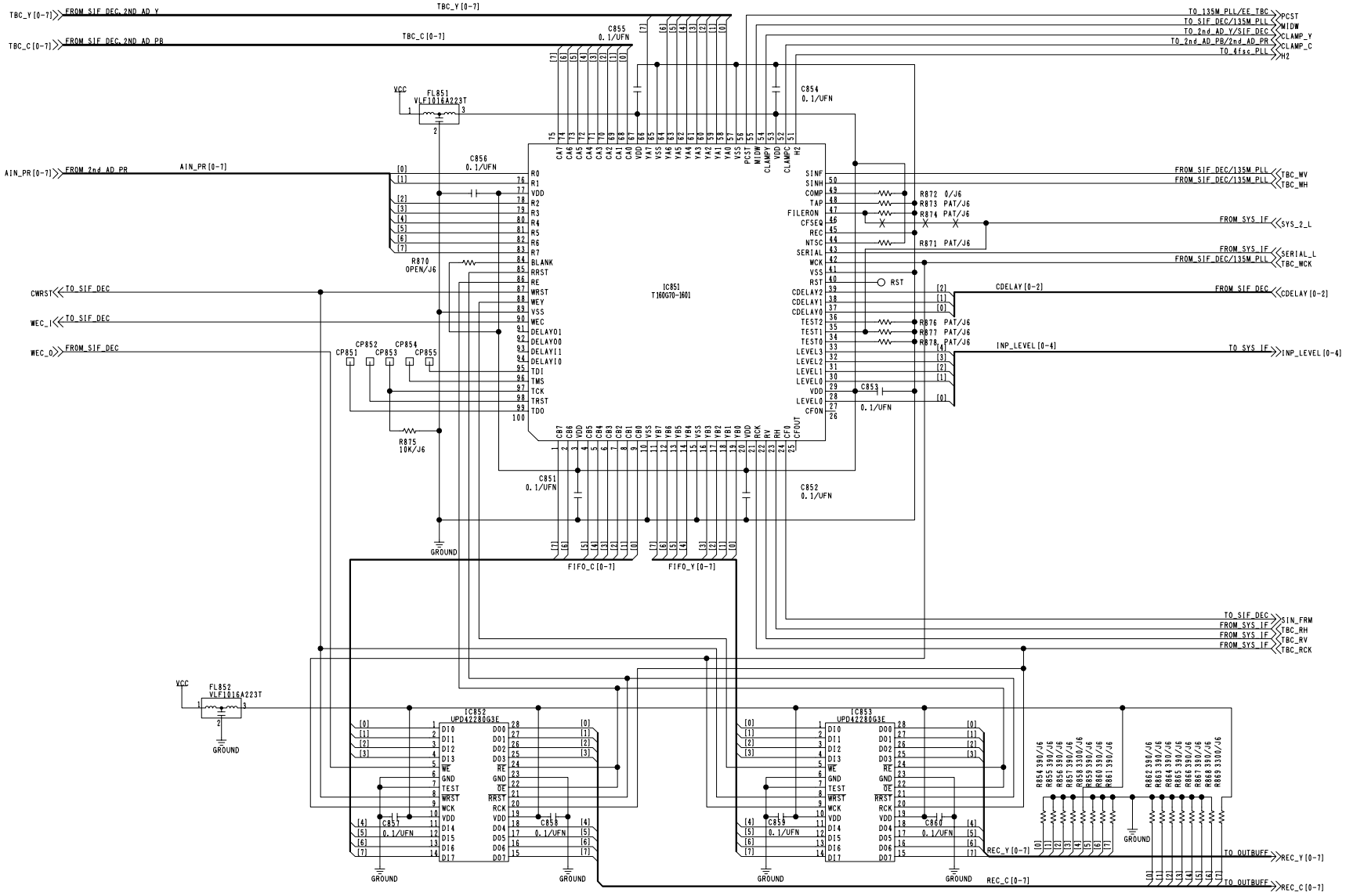

COMPONENT NAME	V_IN_(NTSC)	TBC	17/21
CIRCUIT BOARD NO.		DRAWING NO.	
VEP83409C		KR3V69 (17/21)	
		SCM142	

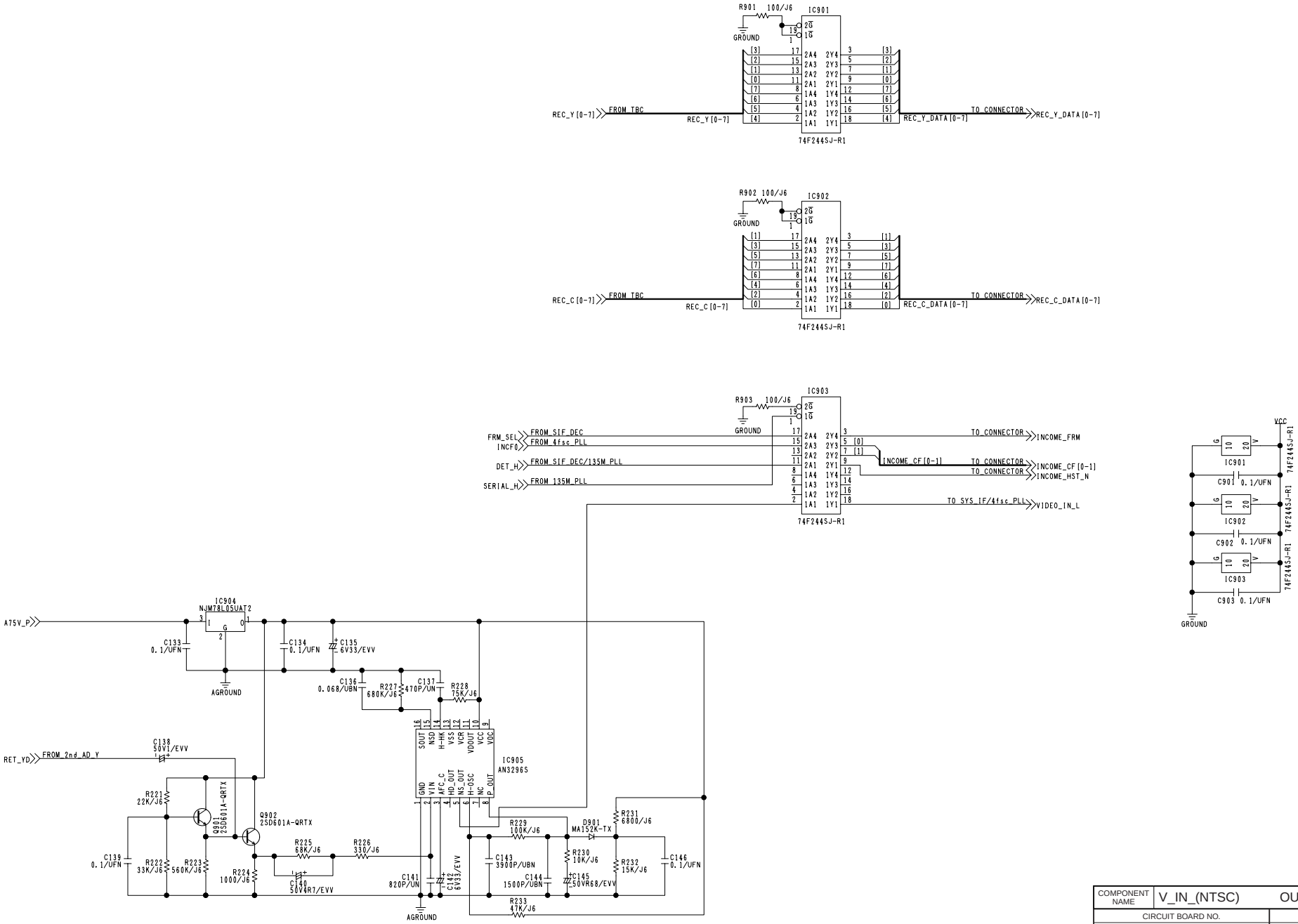

COMPONENT NAME	V_IN_(NTSC)	OUTBUFF	18/21
CIRCUIT BOARD NO.		DRAWING NO.	
VEP83409C		KR3V69(18/21)	
		SCM143	

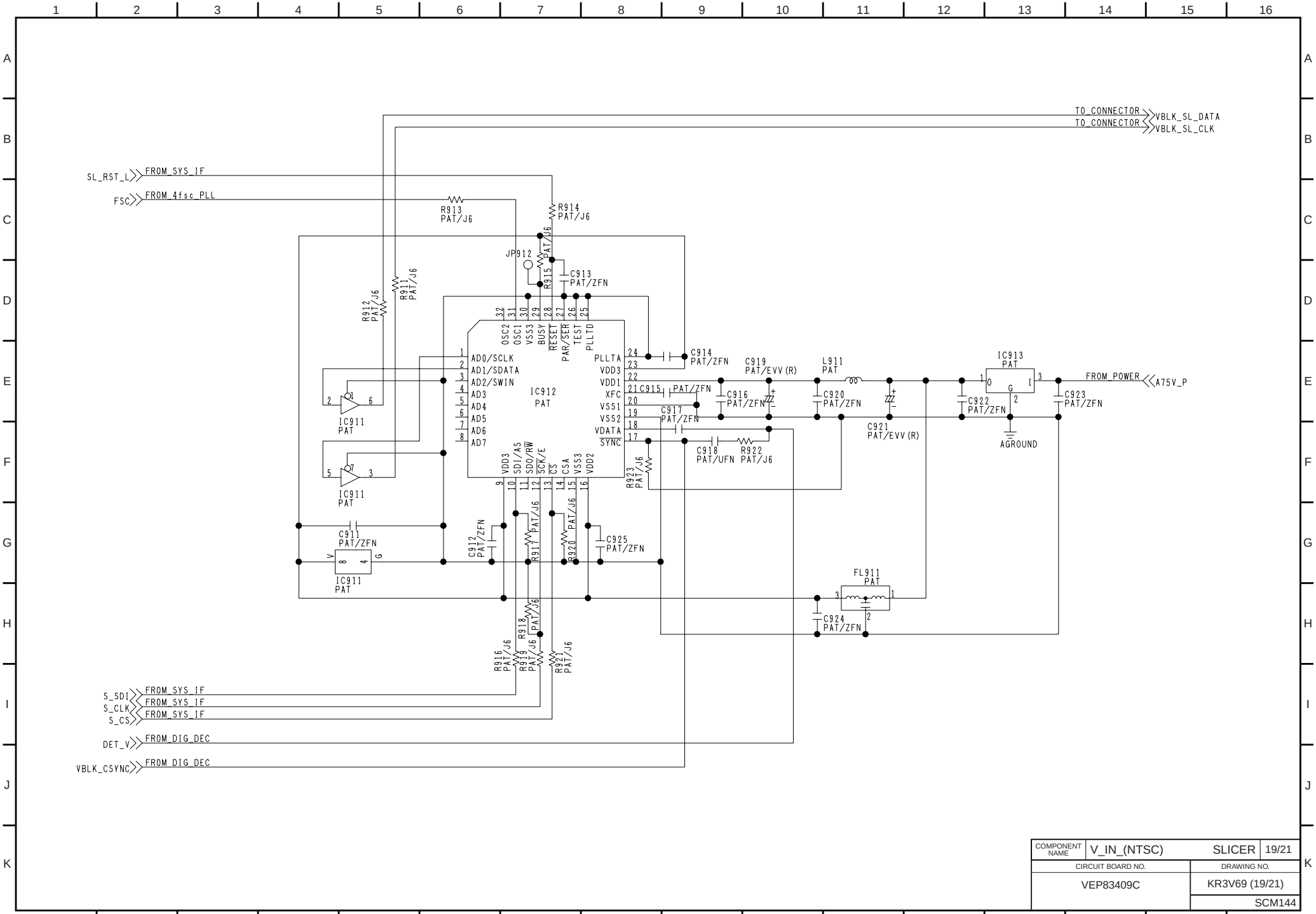

COMPONENT NAME	V_IN_(NTSC)	SLICER	19/21
CIRCUIT BOARD NO.		DRAWING NO.	
VEP83409C		KR3V69 (19/21)	
		SCM144	

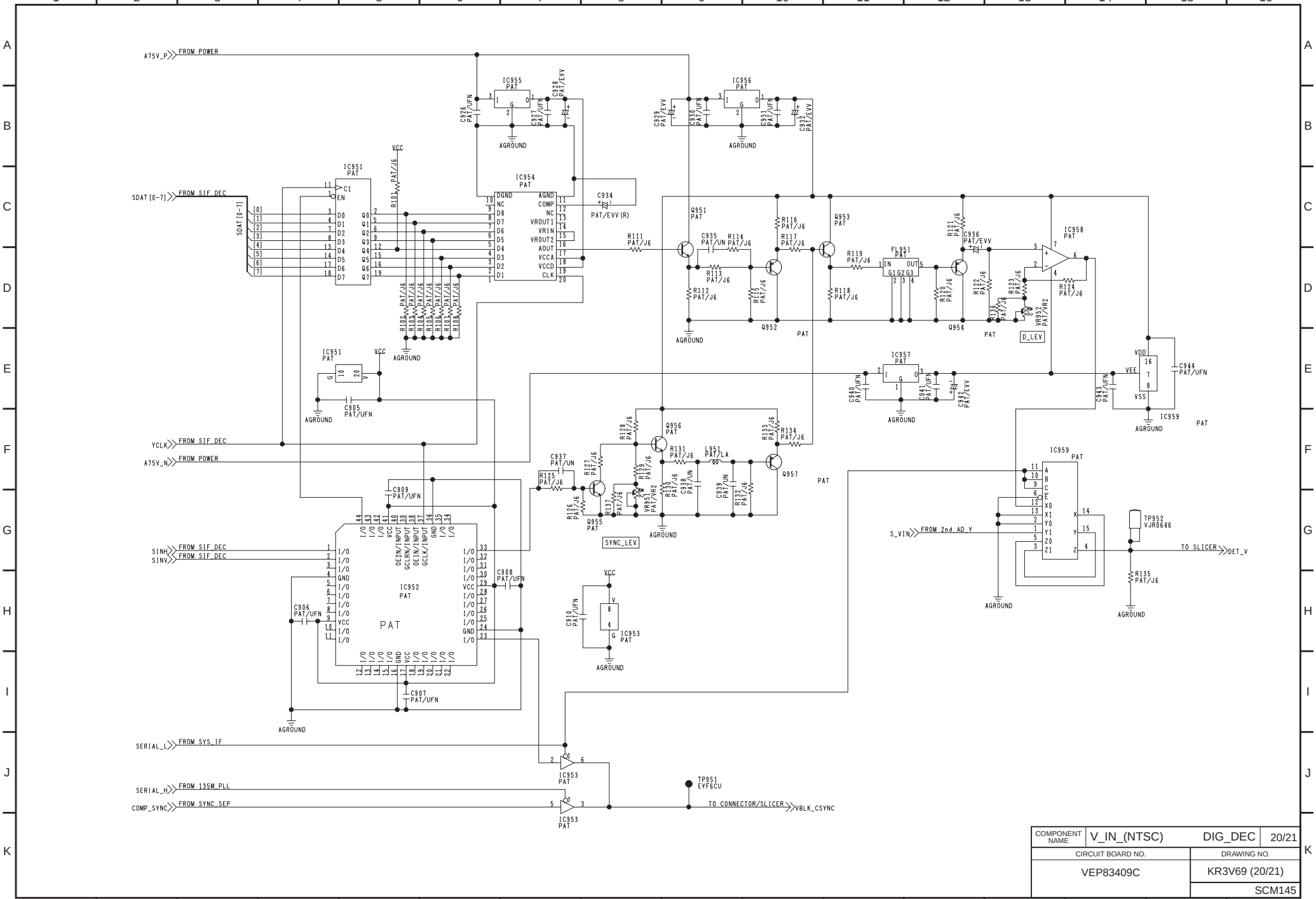

COMPONENT NAME	V_IN_(NTSC)	DIG_DEC	20/21
CIRCUIT BOARD NO.		DRAWING NO.	
VEP83409C		KR3V69 (20/21)	
		SCM145	

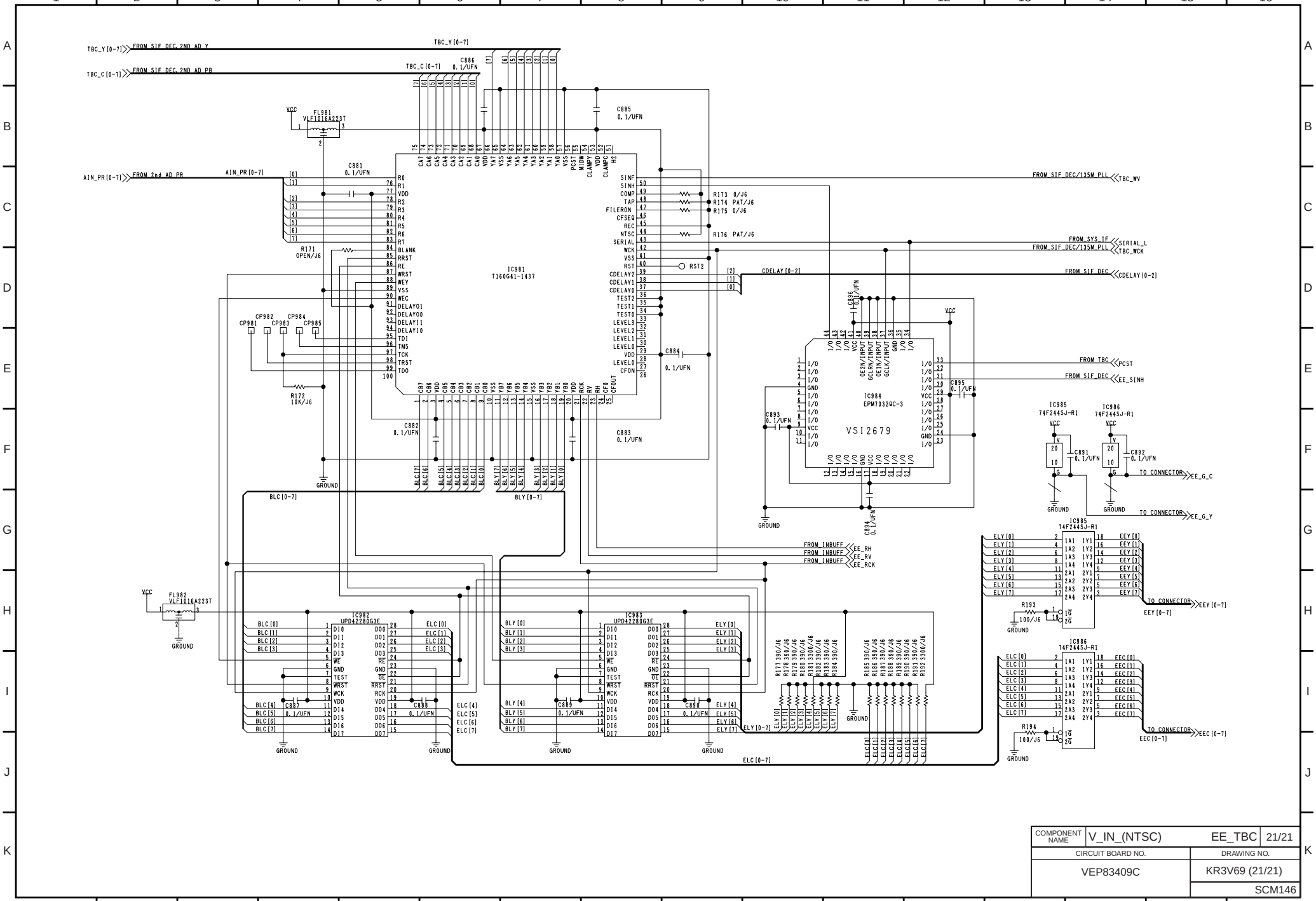

COMPONENT NAME	V_IN_(NTSC)	EE_TBC	21/21
CIRCUIT BOARD NO.		DRAWING NO.	
VEP83409C		KR3V69 (21/21)	
		SCM146	

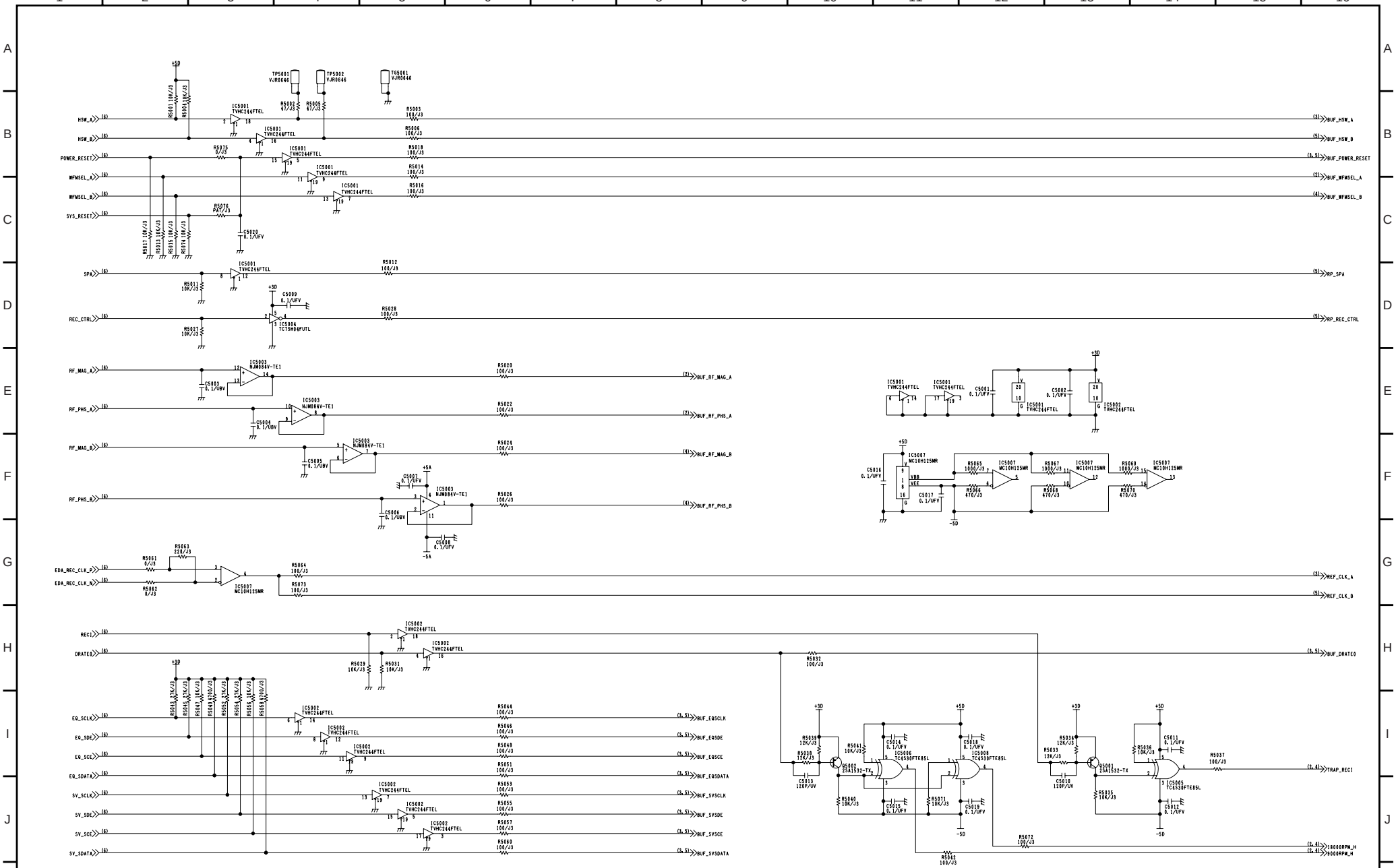

COMPONENT NAME	H1,H2:EQ	01/06
CIRCUIT BOARD NO.		DRAWING NO.
VEP85184A-1		KR5553 (1/6)
		SCM147

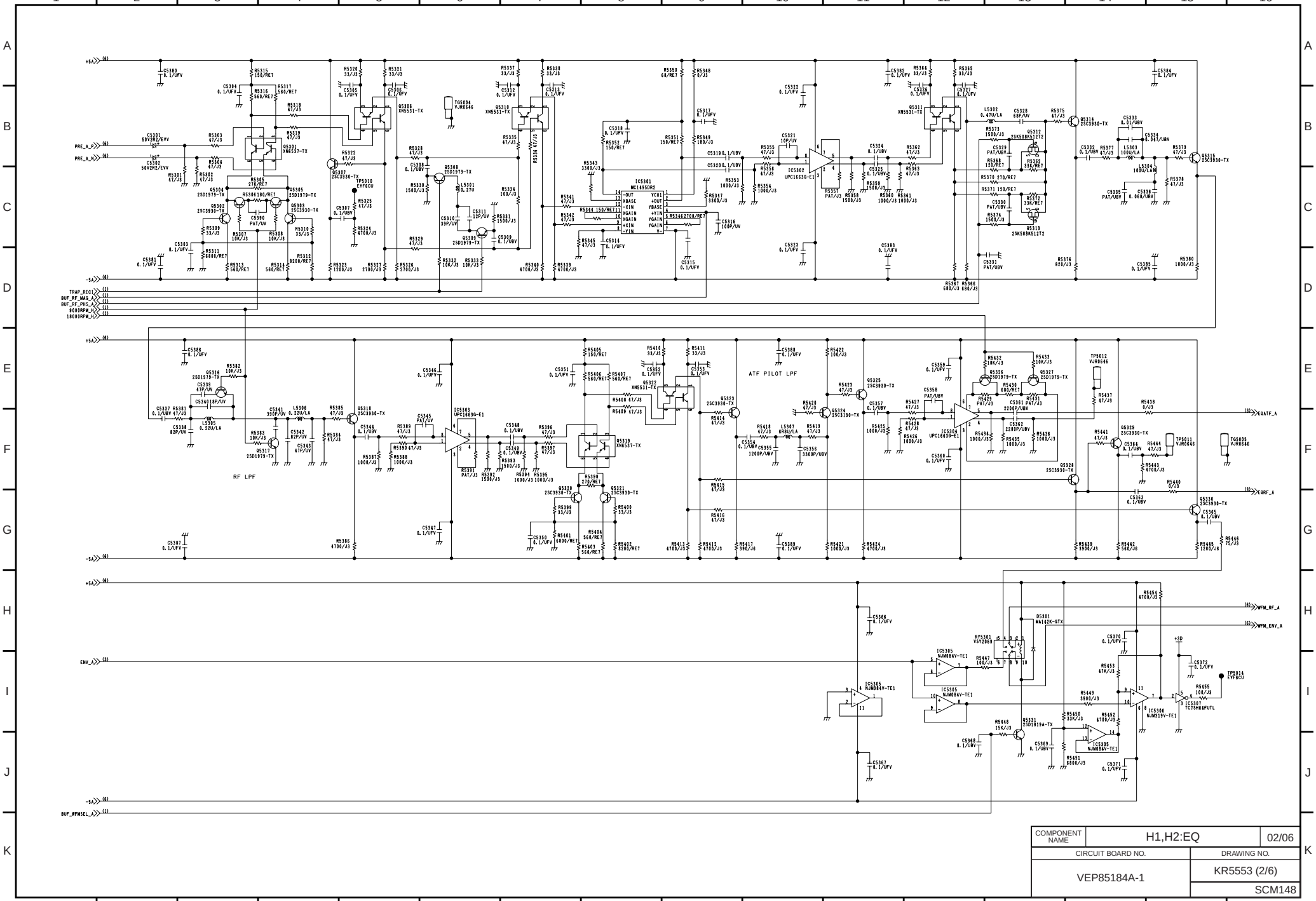

COMPONENT NAME	H1,H2:EQ	02/06
CIRCUIT BOARD NO.	DRAWING NO.	
VEP85184A-1	KR5553 (2/6)	
	SCM148	

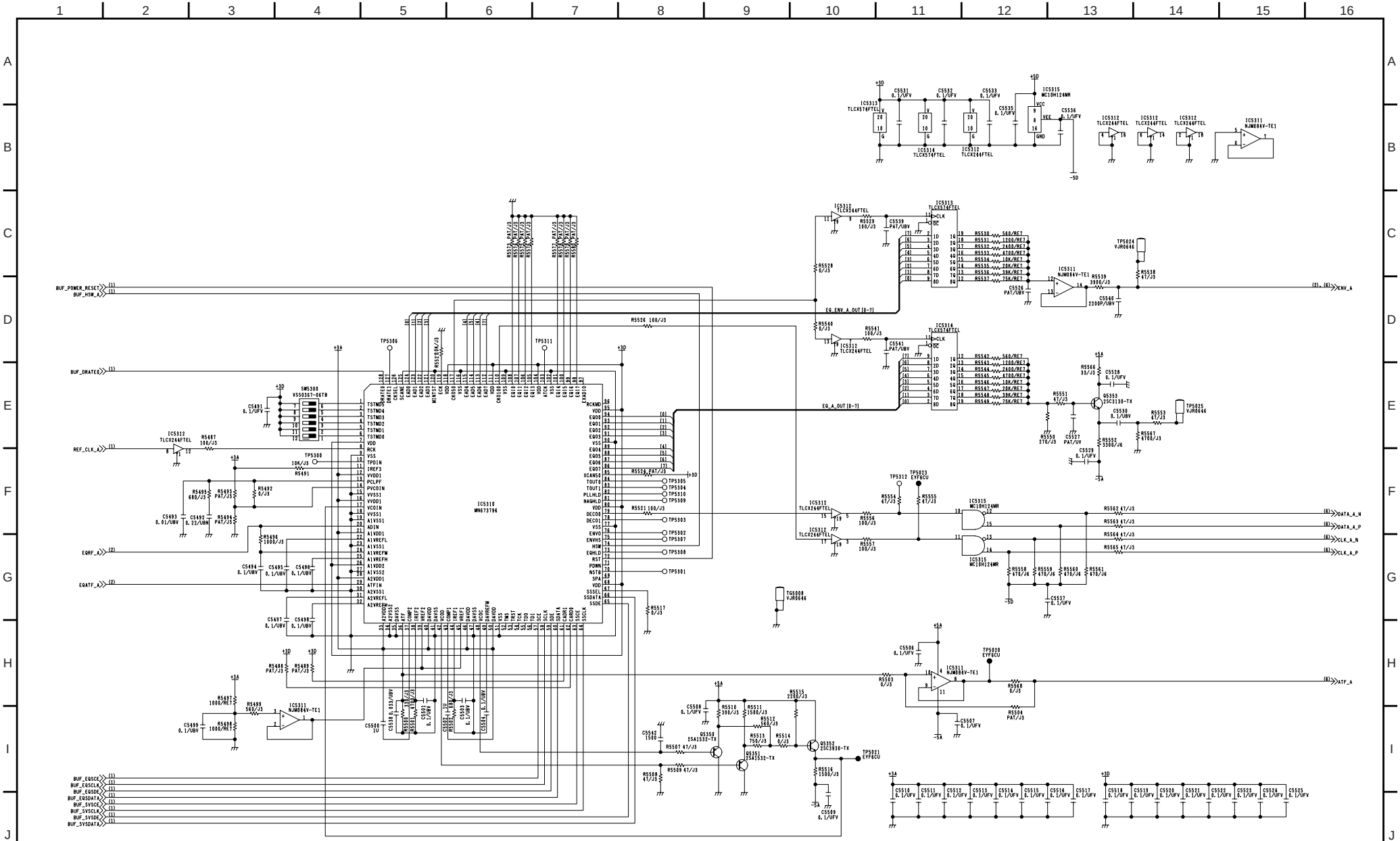

COMPONENT NAME	H1,H2:EQ	03/06
CIRCUIT BOARD NO.	DRAWING NO.	
VEP85184A-1	KR5553 (3/6)	
	SCM149	

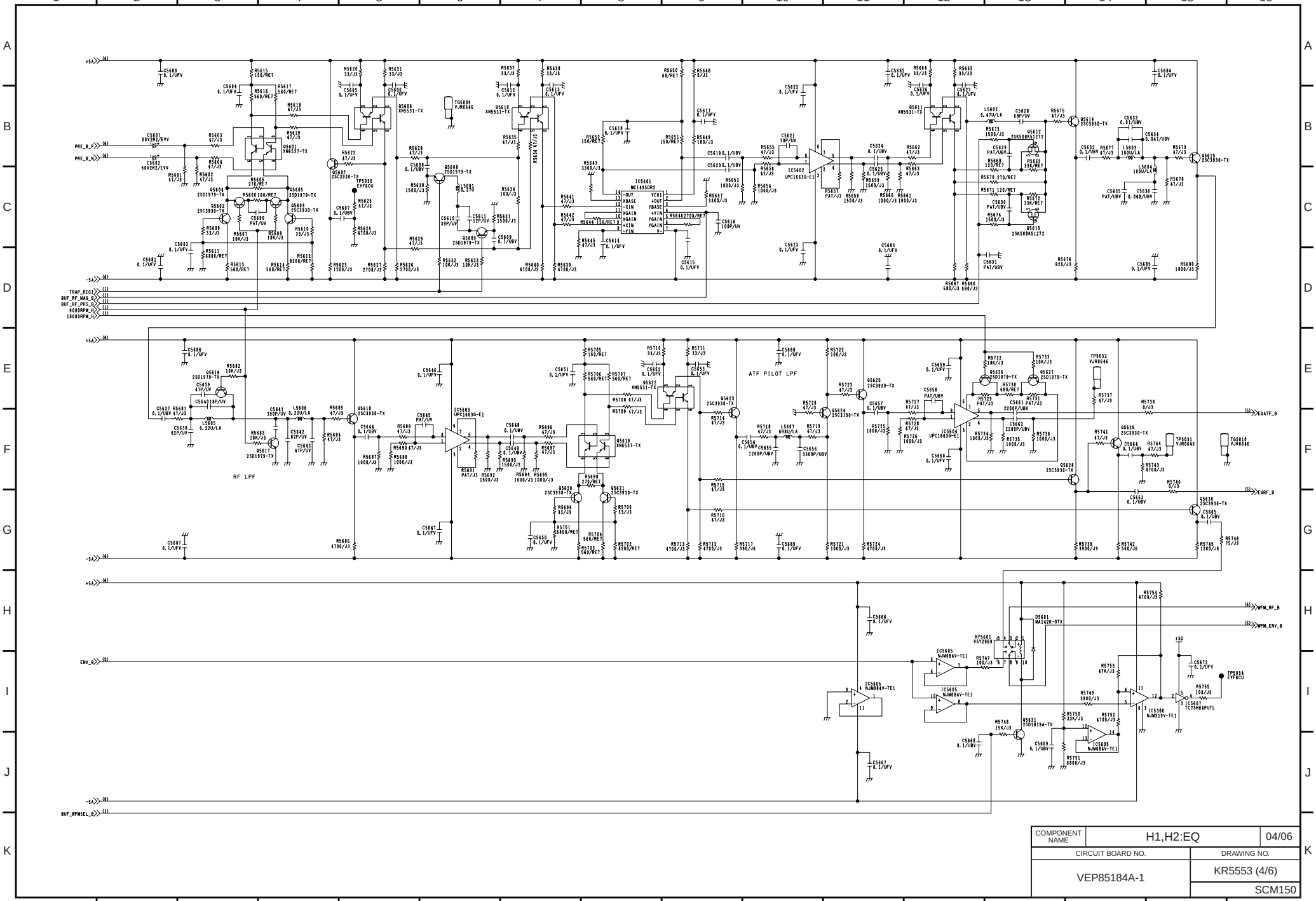

COMPONENT NAME	H1,H2:EQ	04/06
CIRCUIT BOARD NO.		DRAWING NO.
VEP85184A-1		KR5553 (4/6)
		SCM150

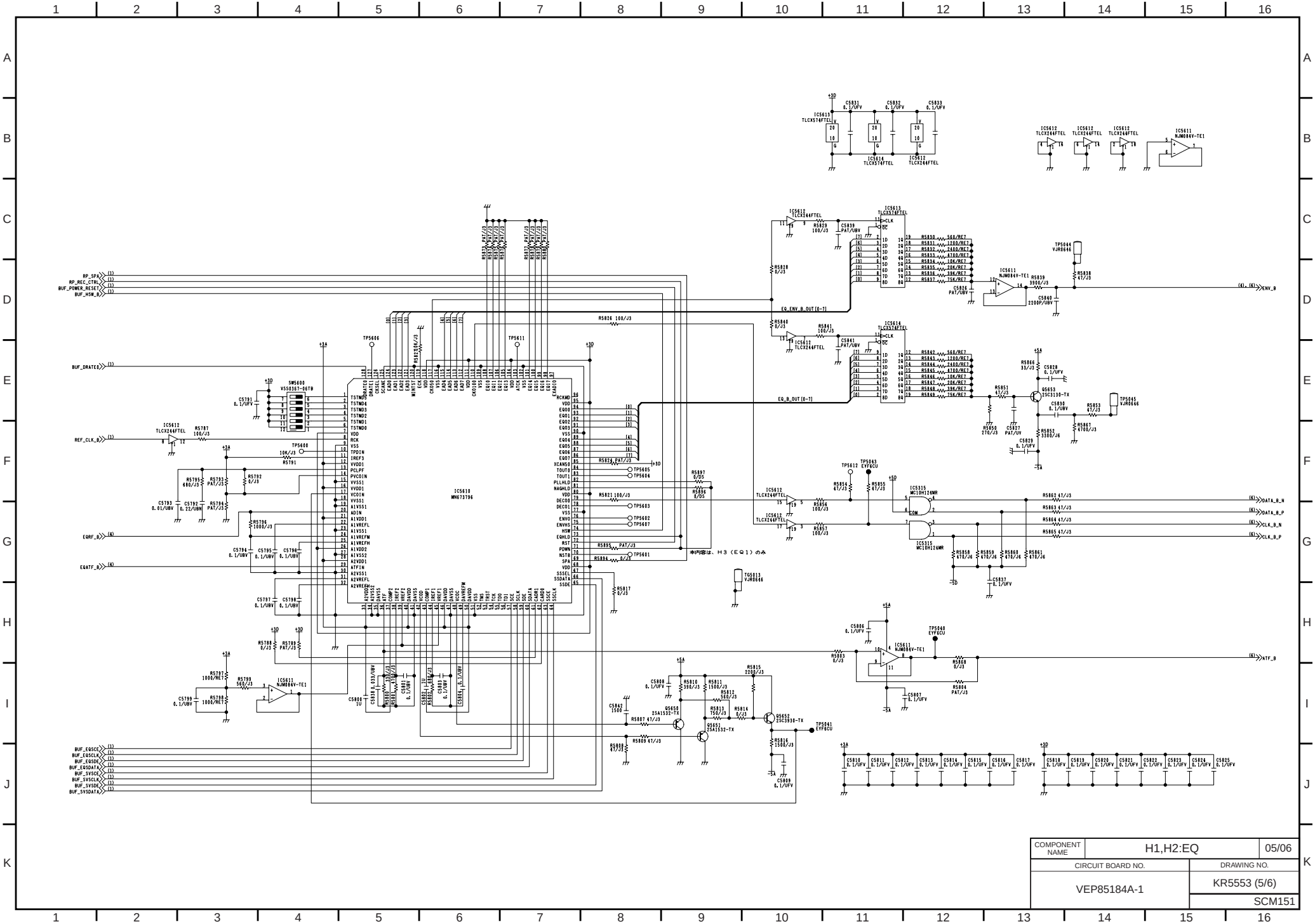

COMPONENT NAME	H1,H2:EQ	05/06
CIRCUIT BOARD NO.		DRAWING NO.
VEP85184A-1		KR5553 (5/6)
		SCM151

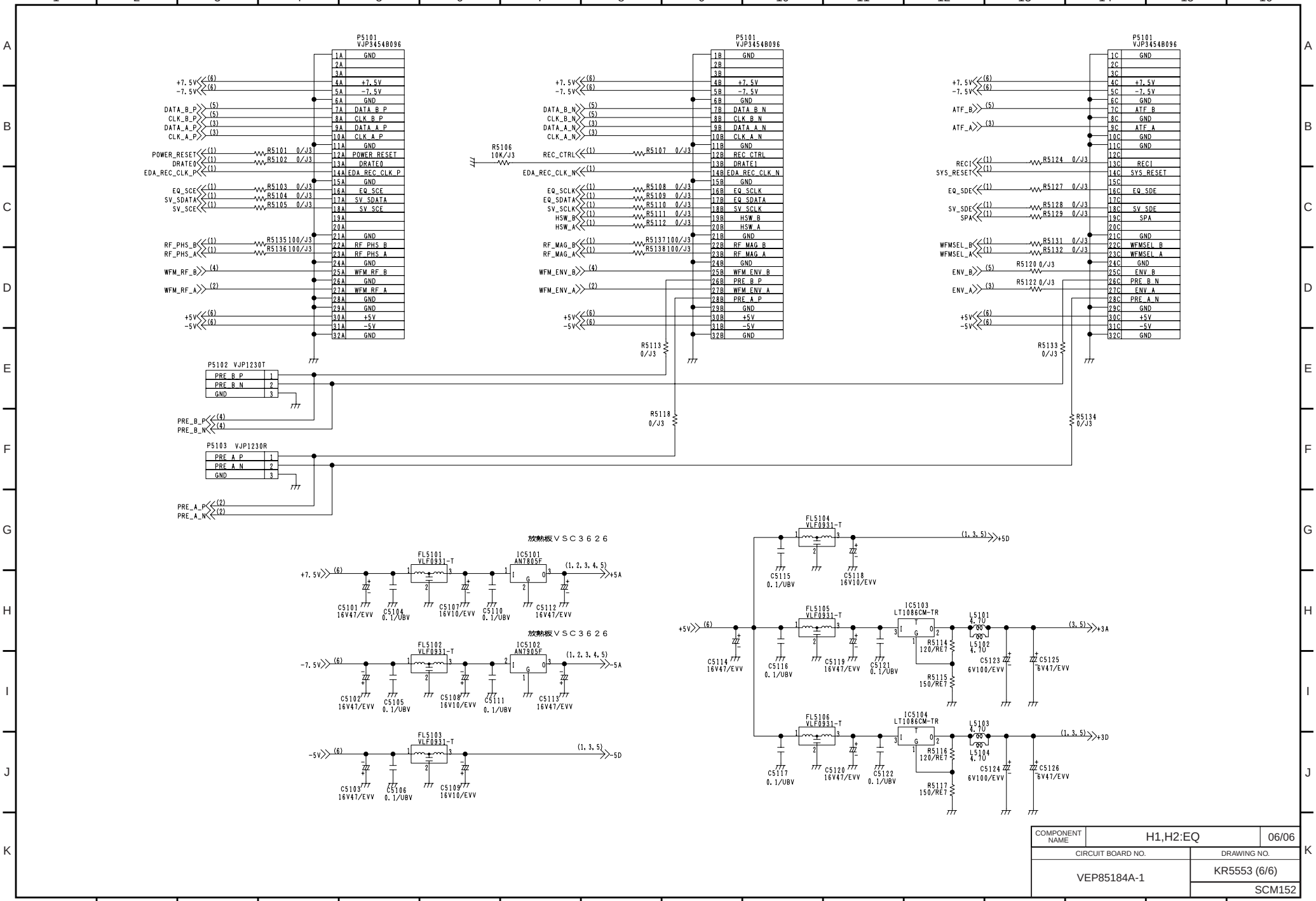

COMPONENT NAME	H1,H2:EQ	06/06
CIRCUIT BOARD NO.		DRAWING NO.
VEP85184A-1		KR5553 (6/6)
		SCM152

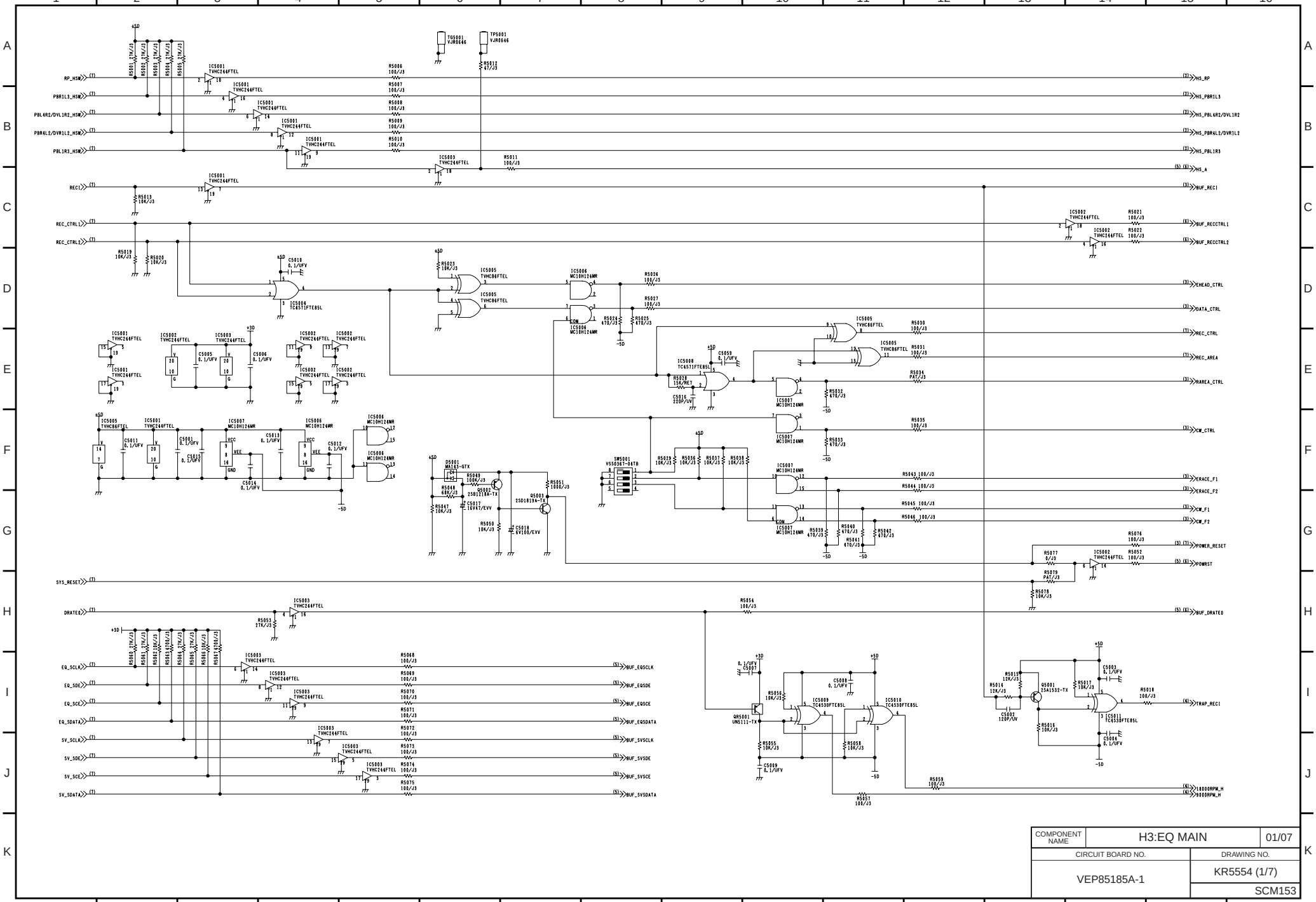

COMPONENT NAME	H3:EQ MAIN	01/07
CIRCUIT BOARD NO.		DRAWING NO.
VEP85185A-1		KR5554 (1/7)
		SCM153

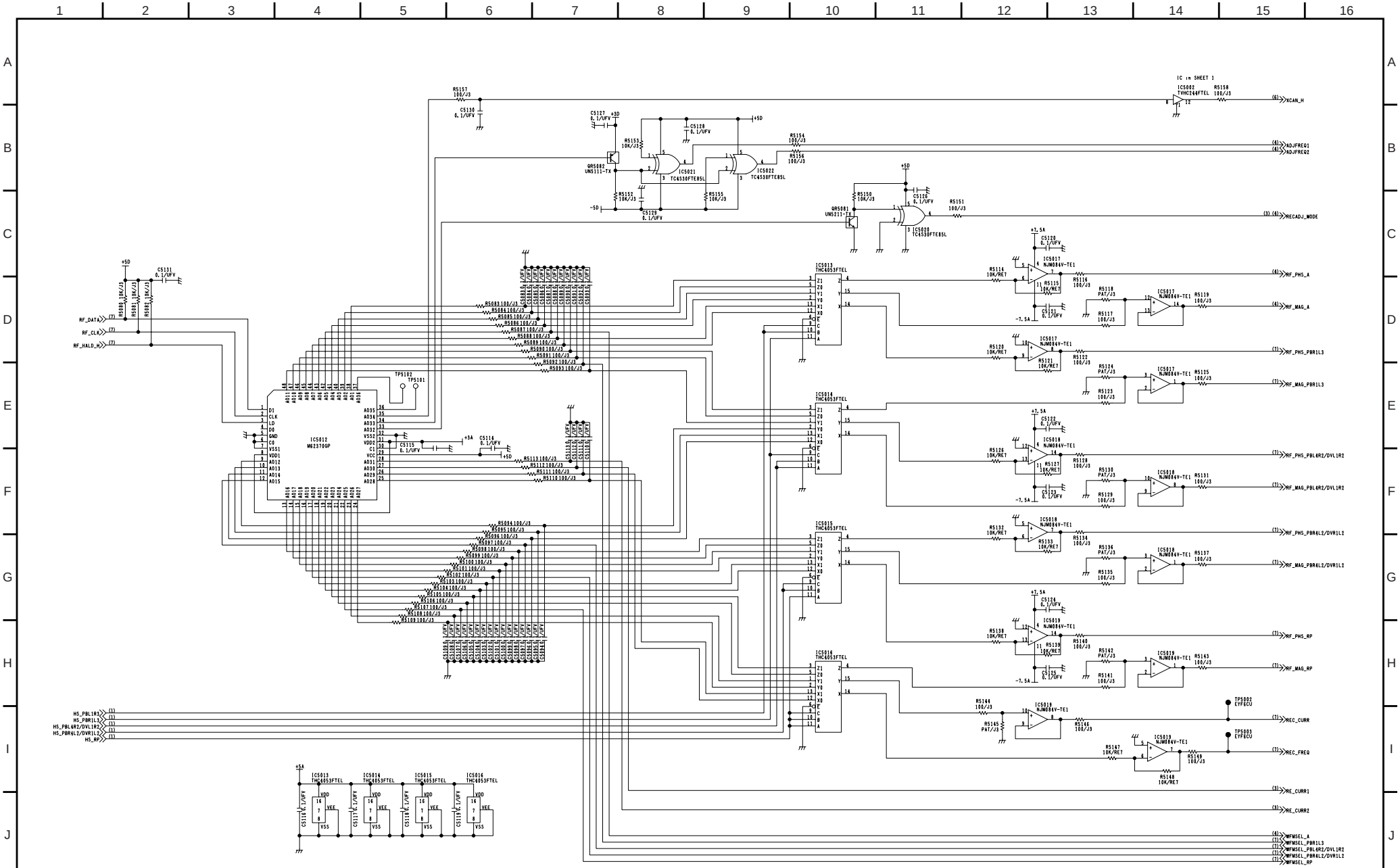

COMPONENT NAME	H3:EQ MAIN	02/07
CIRCUIT BOARD NO.	DRAWING NO.	
VEP85185A-1	KR5554 (2/7)	
	SCM154	

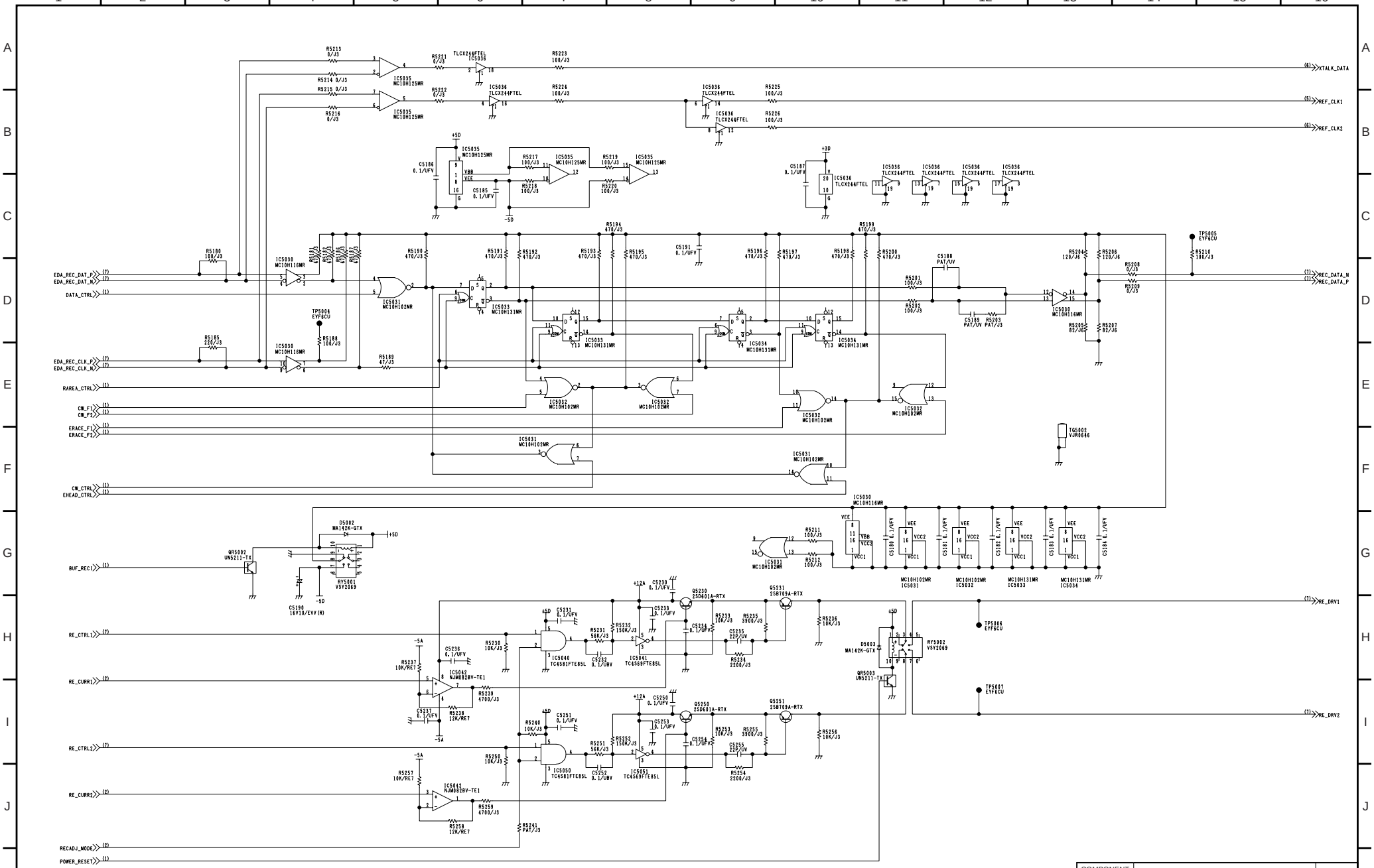

COMPONENT NAME	H3:EQ MAIN	03/07
CIRCUIT BOARD NO.		DRAWING NO.
VEP85185A-1		KR5554 (3/7)
		SCM155

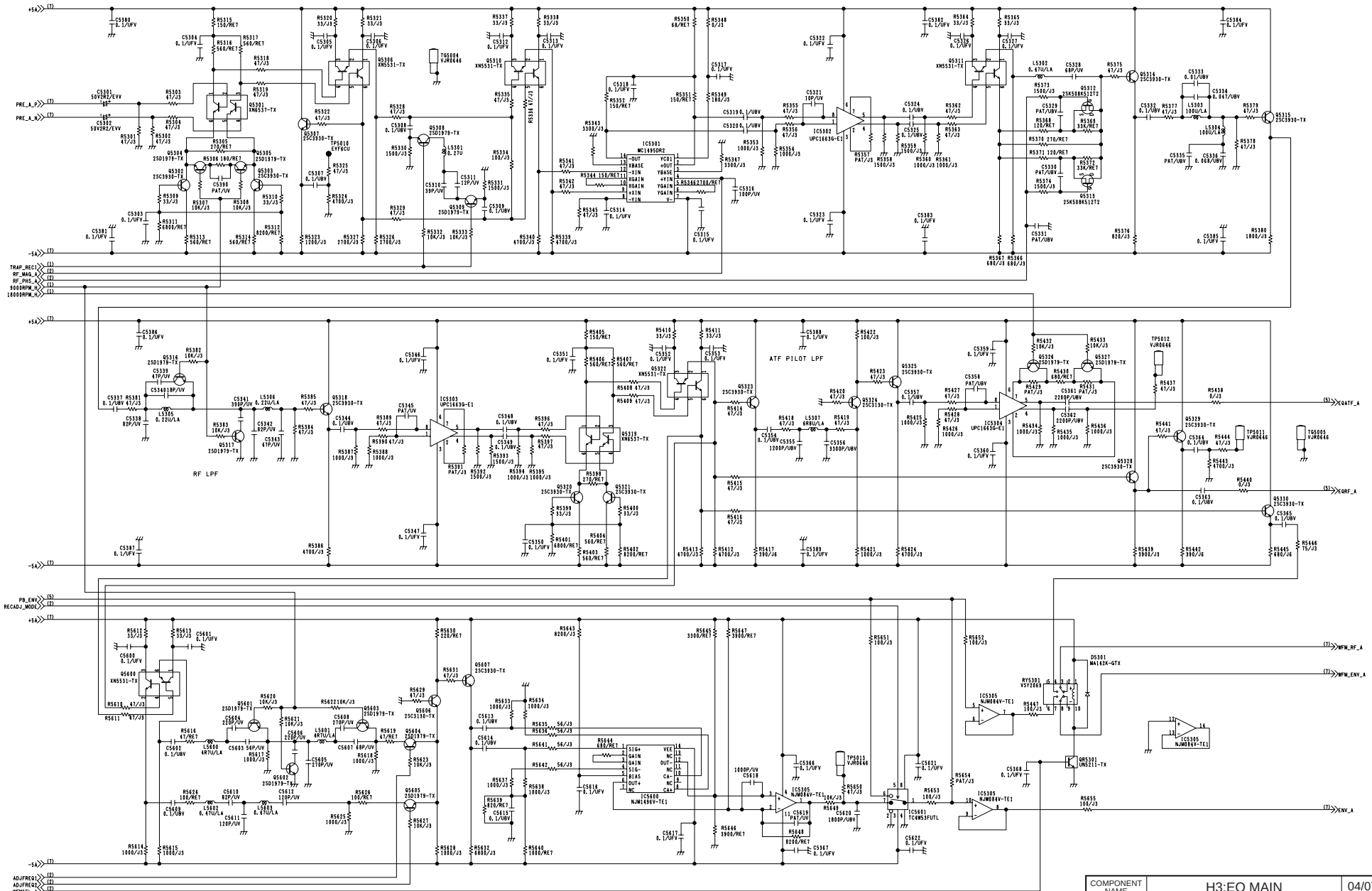

COMPONENT NAME	H3:EQ MAIN	04/07
CIRCUIT BOARD NO.		DRAWING NO.
VEP85185A-1		KR5554 (4/7)
		SCM156

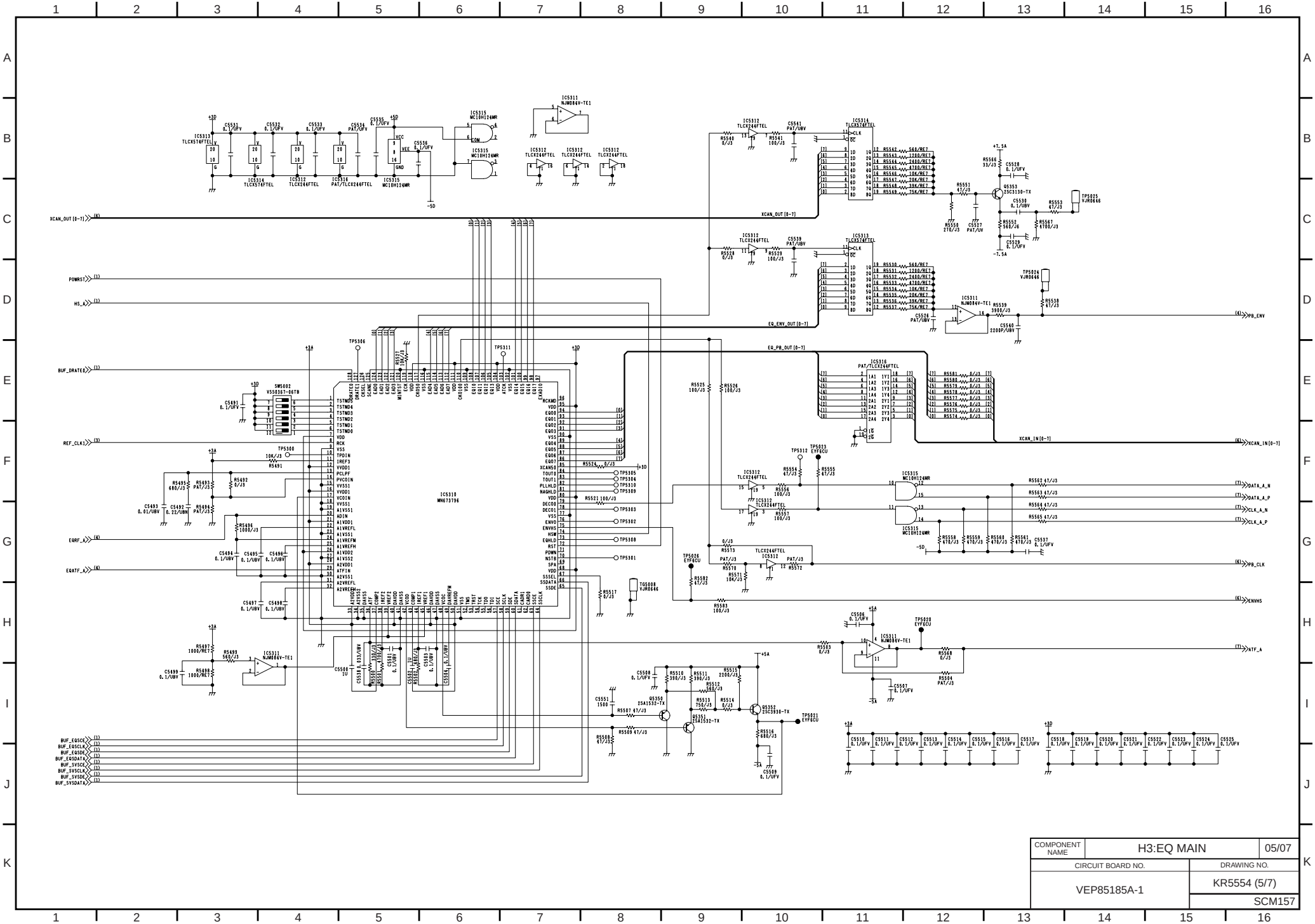
IC5310
MN673796
XCAN_OUT[0-7]
POWRST
HS_A
BUF_DRATE6
REF_CLK1
EQRF_A
EQATF_A
EQ_ENV_OUT[0-7]
EQ_PB_OUT[0-7]
XCAN_IN[0-7]
PB_ENV
PB_CLK
ENVHS
ATF_A
DATA_A_N
DATA_A_P
CLK_A_N
CLK_A_P
BUF_EQSCE
BUF_EQSCLK
BUF_EQSDE
BUF_EQSDATA
BUF_SVSCE
BUF_SVSCLK
BUF_SVSDE
BUF_SVSDATA
COMPONENT NAME
H3:EQ MAIN
05/07
CIRCUIT BOARD NO.
VEP85185A-1
DRAWING NO.
KR5554 (5/7)
SCM157

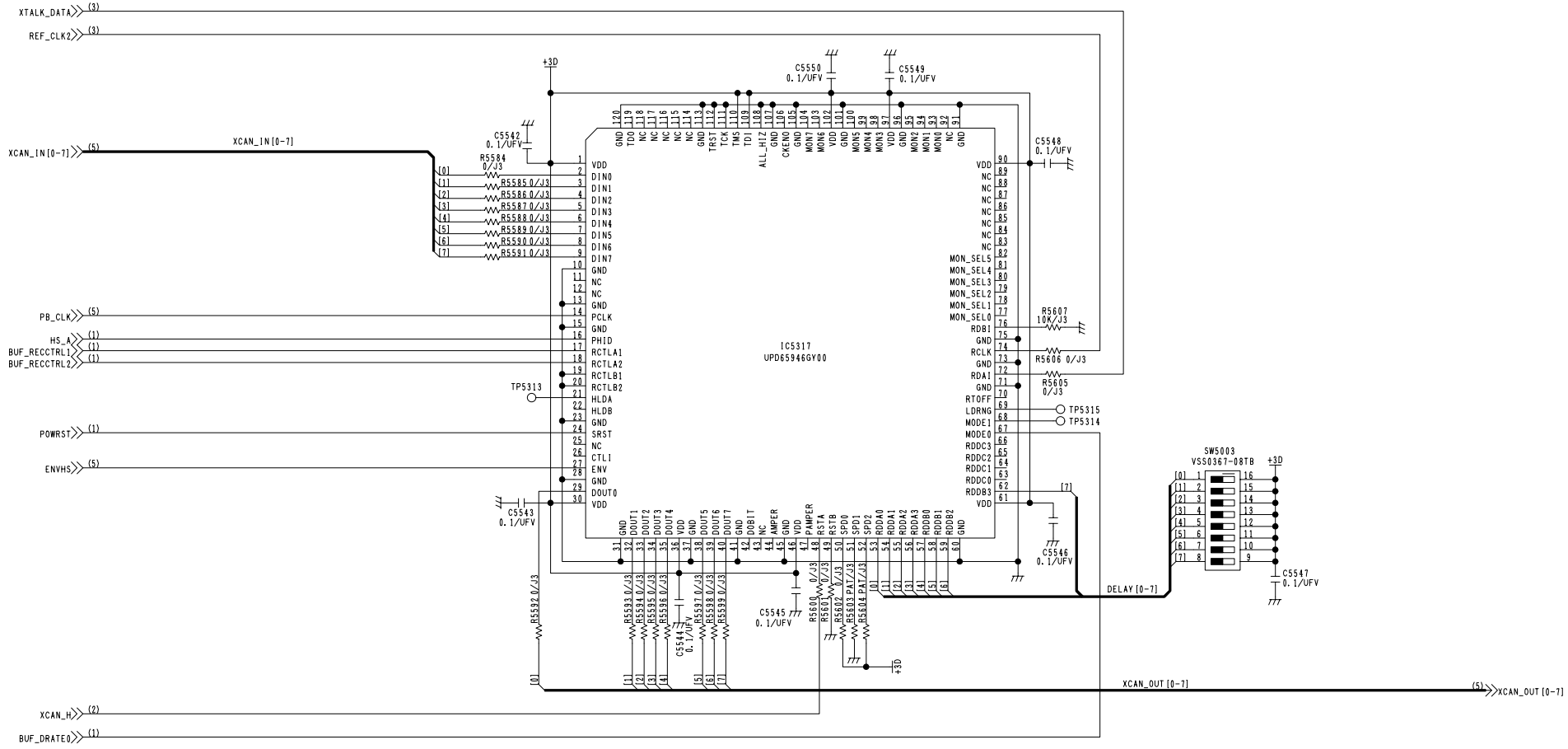

COMPONENT NAME	H3:EQ MAIN	06/07
CIRCUIT BOARD NO.	DRAWING NO.	
VEP85185A-1	KR5554 (6/7)	
	SCM158	

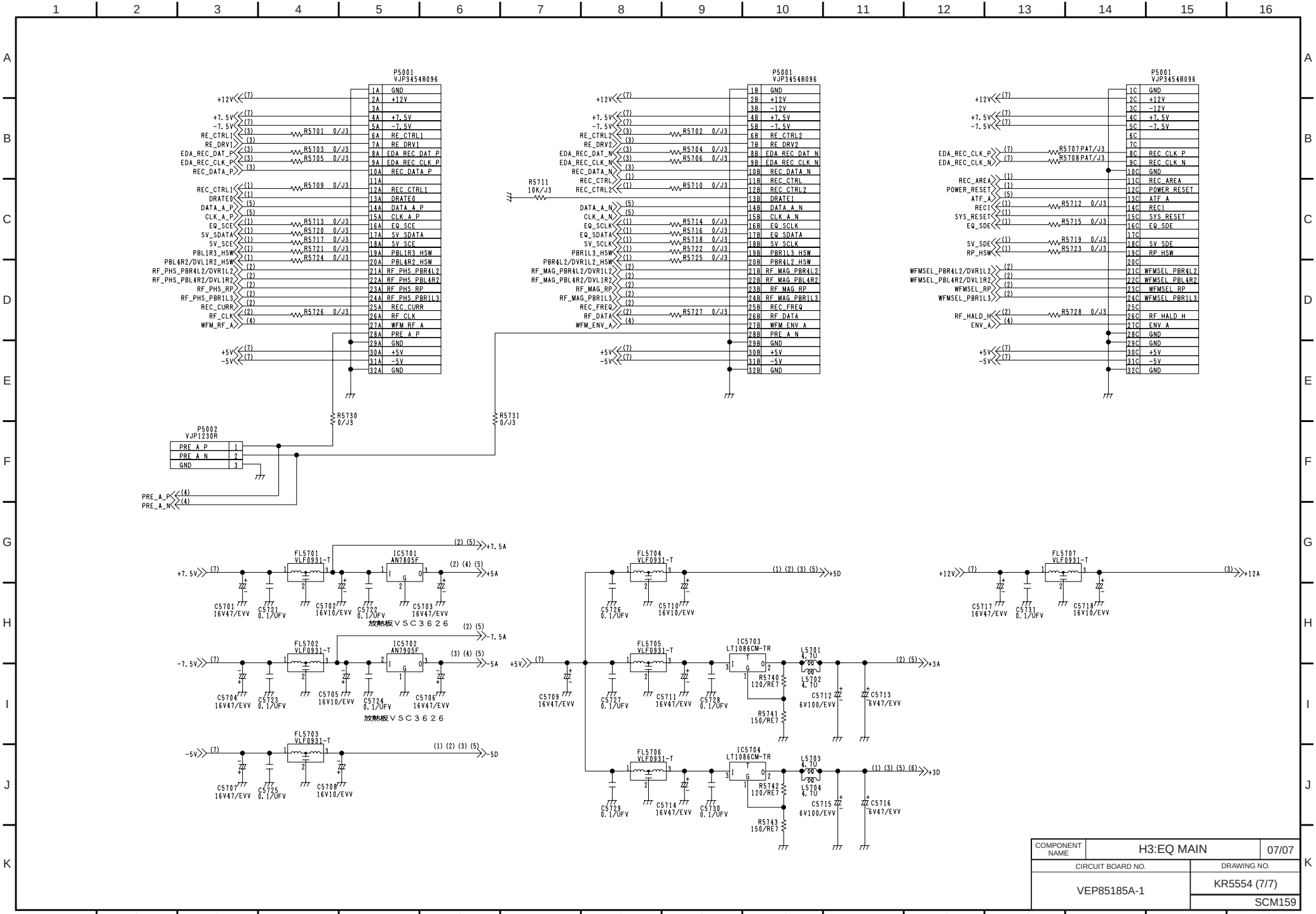
P5001
VJP3454B096
1A GND
2A +12V
3A
4A +7.5V
5A -7.5V
6A RE_CTRL1
7A RE_DRV1
8A EDA_REC_DAT_P
9A EDA_REC_CLK_P
10A REC_DATA_P
11A
12A REC_CTRL1
13A DRATE0
14A DATA_A_P
15A CLK_A_P
16A EQ_SCE
17A SV_SDATA
18A SV_SCE
19A PBL1R3_HSW
20A PBL4R2_HSW
21A RF_PHS_PBR4L2
22A RF_PHS_PBL4R2
23A RF_PHS_RP
24A RF_PHS_PBR1L3
25A REC_CURR
26A RF_CLK
27A WFM_RF_A
28A PRE_A_P
29A GND
30A +5V
31A -5V
32A GND
1B GND
2B +12V
3B -12V
4B +7.5V
5B -7.5V
6B RE_CTRL2
7B RE_DRV2
8B EDA_REC_DAT_N
9B EDA_REC_CLK_N
10B REC_DATA_N
11B REC_CTRL
12B REC_CTRL2
13B DRATE1
14B DATA_A_N
15B CLK_A_N
16B EQ_SCLK
17B EQ_SDATA
18B SV_SCLK
19B PBR1L3_HSW
20B PBR4L2_HSW
21B RF_MAG_PBR4L2
22B RF_MAG_PBL4R2
23B RF_MAG_RP
24B RF_MAG_PBR1L3
25B REC_FREQ
26B RF_DATA
27B WFM_ENV_A
28B PRE_A_N
29B GND
30B +5V
31B -5V
32B GND
1C GND
2C +12V
3C -12V
4C +7.5V
5C -7.5V
6C
7C
8C REC_CLK_P
9C REC_CLK_N
10C GND
11C REC_AREA
12C POWER_RESET
13C ATF_A
14C RECI
15C SYS_RESET
16C EQ_SDE
17C
18C SV_SDE
19C RP_HSW
20C
21C WFMSEL_PBR4L2
22C WFMSEL_PBL4R2
23C WFMSEL_RP
24C WFMSEL_PBR1L3
25C
26C RF_HALD_H
27C ENV_A
28C GND
29C GND
30C +5V
31C -5V
32C GND
P5002
VJP1230R
PRE_A_P 1
PRE_A_N 2
GND 3
R5730 0/J3
R5731 0/J3
R5711 10K/J3
R5701 0/J3
R5703 0/J3
R5705 0/J3
R5709 0/J3
R5713 0/J3
R5720 0/J3
R5717 0/J3
R5721 0/J3
R5724 0/J3
R5726 0/J3
R5702 0/J3
R5704 0/J3
R5706 0/J3
R5710 0/J3
R5714 0/J3
R5716 0/J3
R5718 0/J3
R5722 0/J3
R5725 0/J3
R5727 0/J3
R5707PAT/J3
R5708PAT/J3
R5712 0/J3
R5715 0/J3
R5719 0/J3
R5723 0/J3
R5728 0/J3
FL5701 VLF0931-T
IC5701 AN7805F
FL5702 VLF0931-T
IC5702 AN7905F
FL5703 VLF0931-T
FL5704 VLF0931-T
FL5705 VLF0931-T
FL5706 VLF0931-T
FL5707 VLF0931-T
IC5703 LT1086CM-TR
IC5704 LT1086CM-TR
L5701 4.7U
L5702 4.7U
L5703 4.7U
L5704 4.7U
R5740 120/RE7
R5741 150/RE7
R5742 120/RE7
R5743 150/RE7
C5701 16V47/EVV
C5721 0.1/UFV
C5702 16V10/EVV
C5722 0.1/UFV
C5703 16V47/EVV
放熱板ＶＳＣ３６２６
C5704 16V47/EVV
C5723 0.1/UFV
C5705 16V10/EVV
C5724 0.1/UFV
C5706 16V47/EVV
放熱板ＶＳＣ３６２６
C5707 16V47/EVV
C5725 0.1/UFV
C5708 16V10/EVV
C5709 16V47/EVV
C5726 0.1/UFV
C5710 16V10/EVV
C5727 0.1/UFV
C5711 16V47/EVV
C5728 0.1/UFV
C5712 6V100/EVV
C5713 6V47/EVV
C5729 0.1/UFV
C5714 16V47/EVV
C5730 0.1/UFV
C5715 6V100/EVV
C5716 6V47/EVV
C5717 16V47/EVV
C5731 0.1/UFV
C5718 16V10/EVV
+7.5A
+5A
-7.5A
-5A
+5D
-5D
+3A
+3D
+12A
COMPONENT NAME
H3:EQ MAIN
07/07
CIRCUIT BOARD NO.
VEP85185A-1
DRAWING NO.
KR5554 (7/7)
SCM159

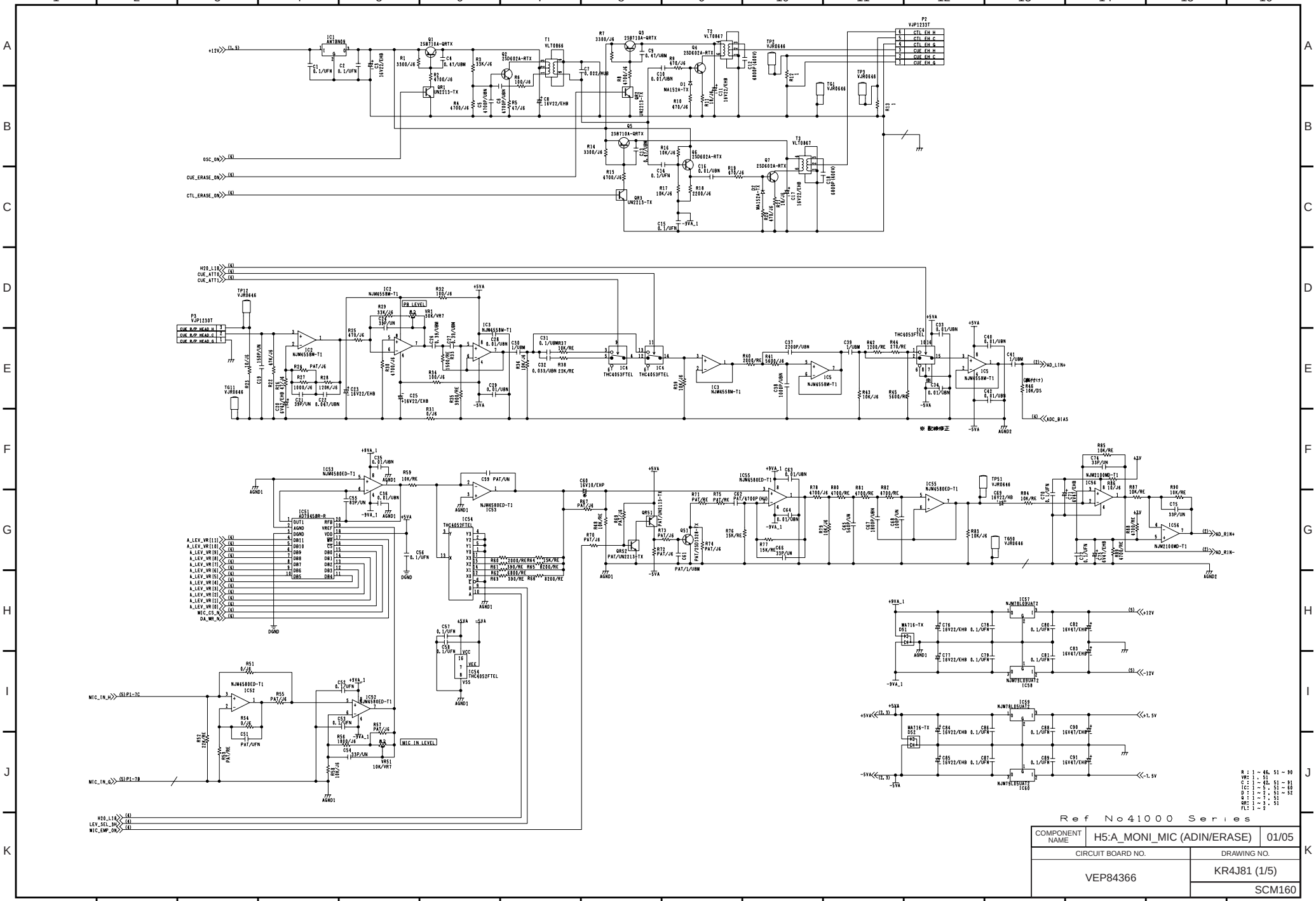

COMPONENT NAME	H5:A_MONI_MIC (ADIN/ERASE)	01/05
CIRCUIT BOARD NO.		DRAWING NO.
VEP84366		KR4J81 (1/5)
		SCM160

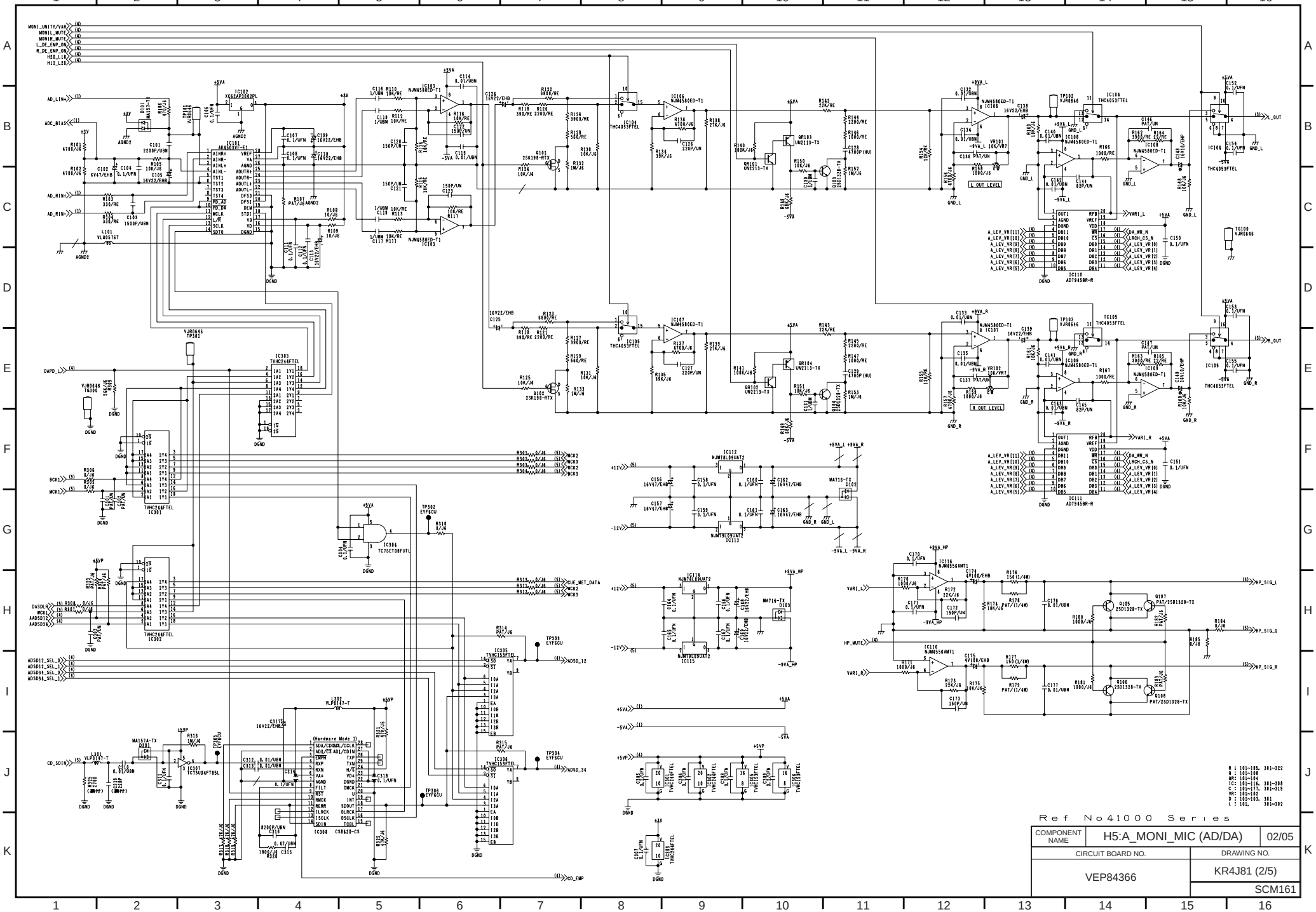
MONI_UNITY/VAR
MONI_L_MUTE
MONI_R_MUTE
L_DE_EMP_ON
R_DE_EMP_ON
H22_L18
H12_L20
AD_LIN+
ADC_BIAS
AD_RIN+
AD_RIN-
DAPD_L
BCK1
WCK1
DASDLR
WCK1
ADSD12
ADSD34
ADSD12_SEL_0
ADSD12_SEL_1
ADSD34_SEL_0
ADSD34_SEL_1
CD_SDIN
L_OUT
R_OUT
VARI_L
VARI_R
HP_MUTE
HP_SIG_L
HP_SIG_G
HP_SIG_R
CUE_MET_DATA
ADSD_12
ADSD_34
CD_EMP
L OUT LEVEL
R OUT LEVEL
Ref No41000 Series
COMPONENT NAME
H5:A_MONI_MIC (AD/DA)
02/05
CIRCUIT BOARD NO.
VEP84366
DRAWING NO.
KR4J81 (2/5)
SCM161

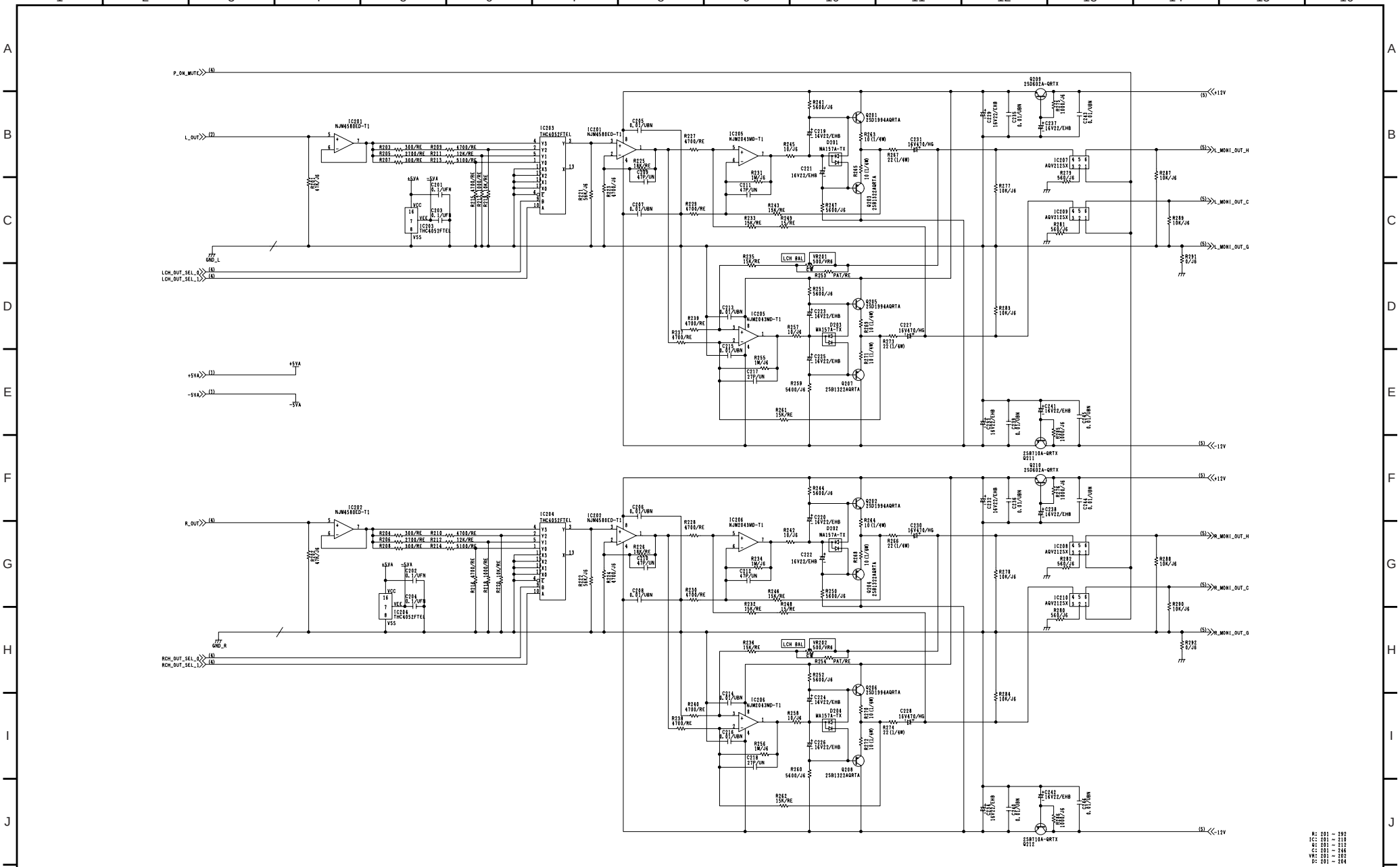

Ref No41000 Series

COMPONENT NAME	H5:A_MONI_MIC (MONI_OUT)	03/05
CIRCUIT BOARD NO.		DRAWING NO.
VEP84366		KR4J81 (3/5)
		SCM162

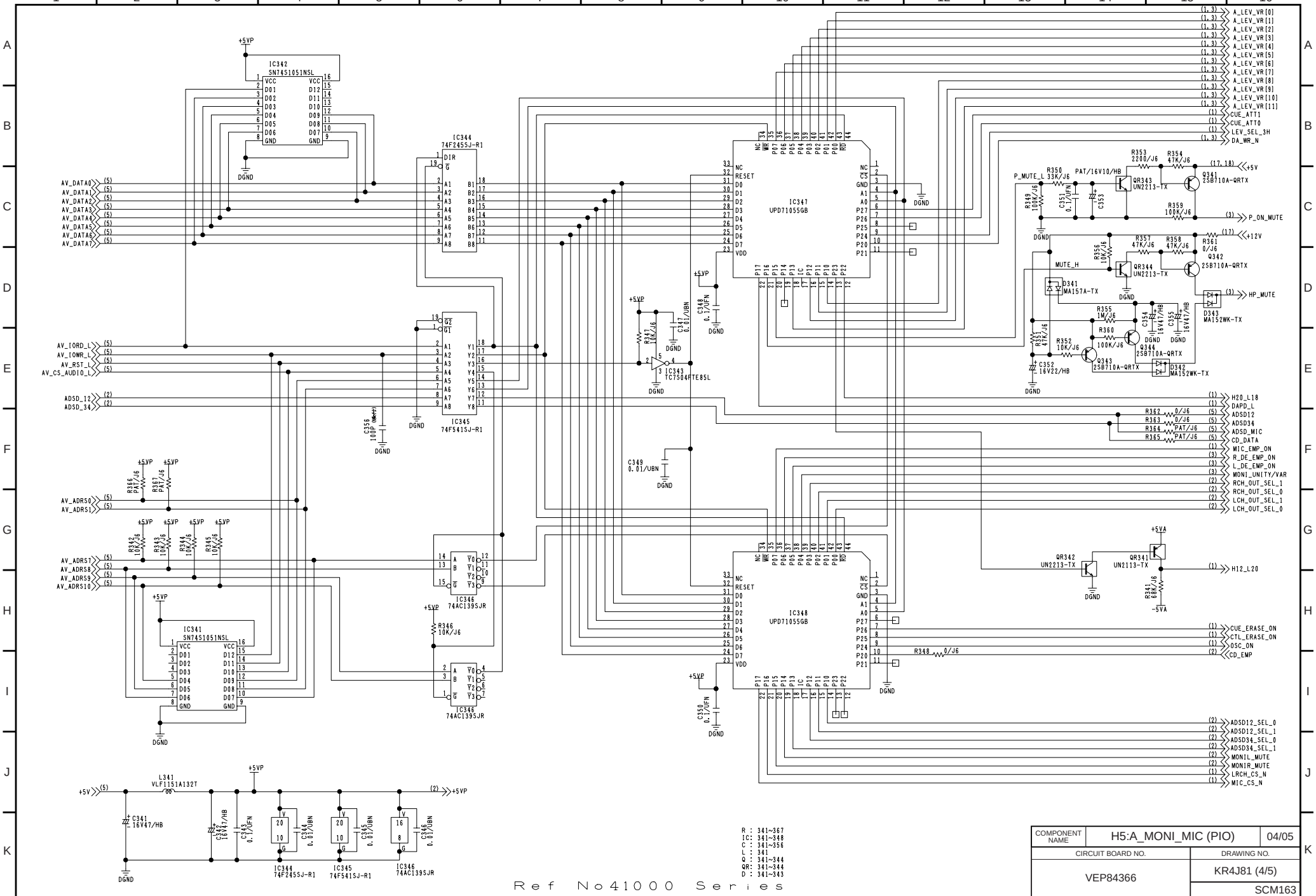

COMPONENT NAME	H5:A_MONI_MIC (PIO)	04/05
CIRCUIT BOARD NO.	DRAWING NO.	
VEP84366	KR4J81 (4/5)	
	SCM163	

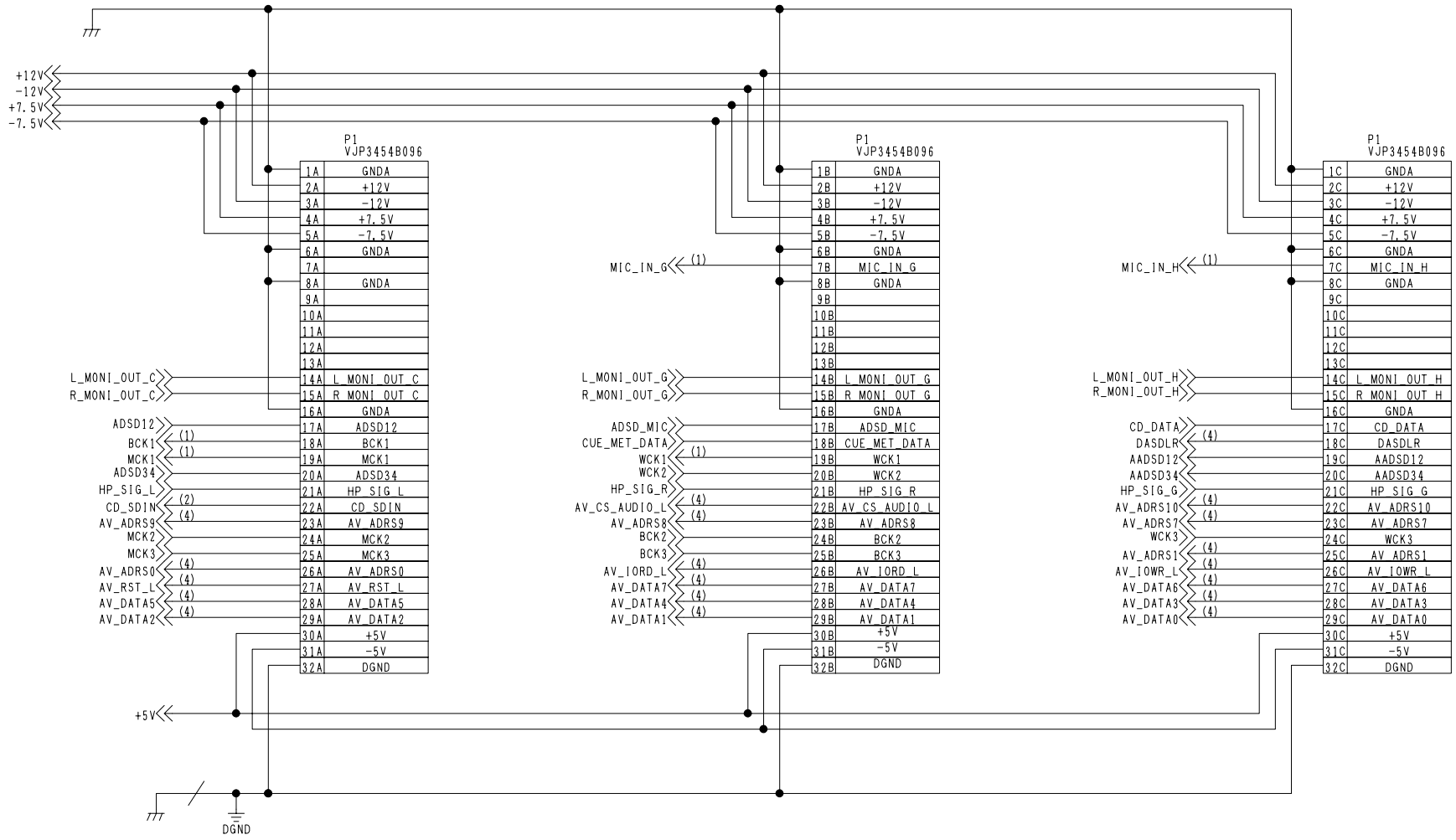

Ref No41000 Series

COMPONENT NAME	H5:A_MONI_MIC	05/05
CIRCUIT BOARD NO.		DRAWING NO.
VEP84366		KR4J81 (5/5)
		SCM164

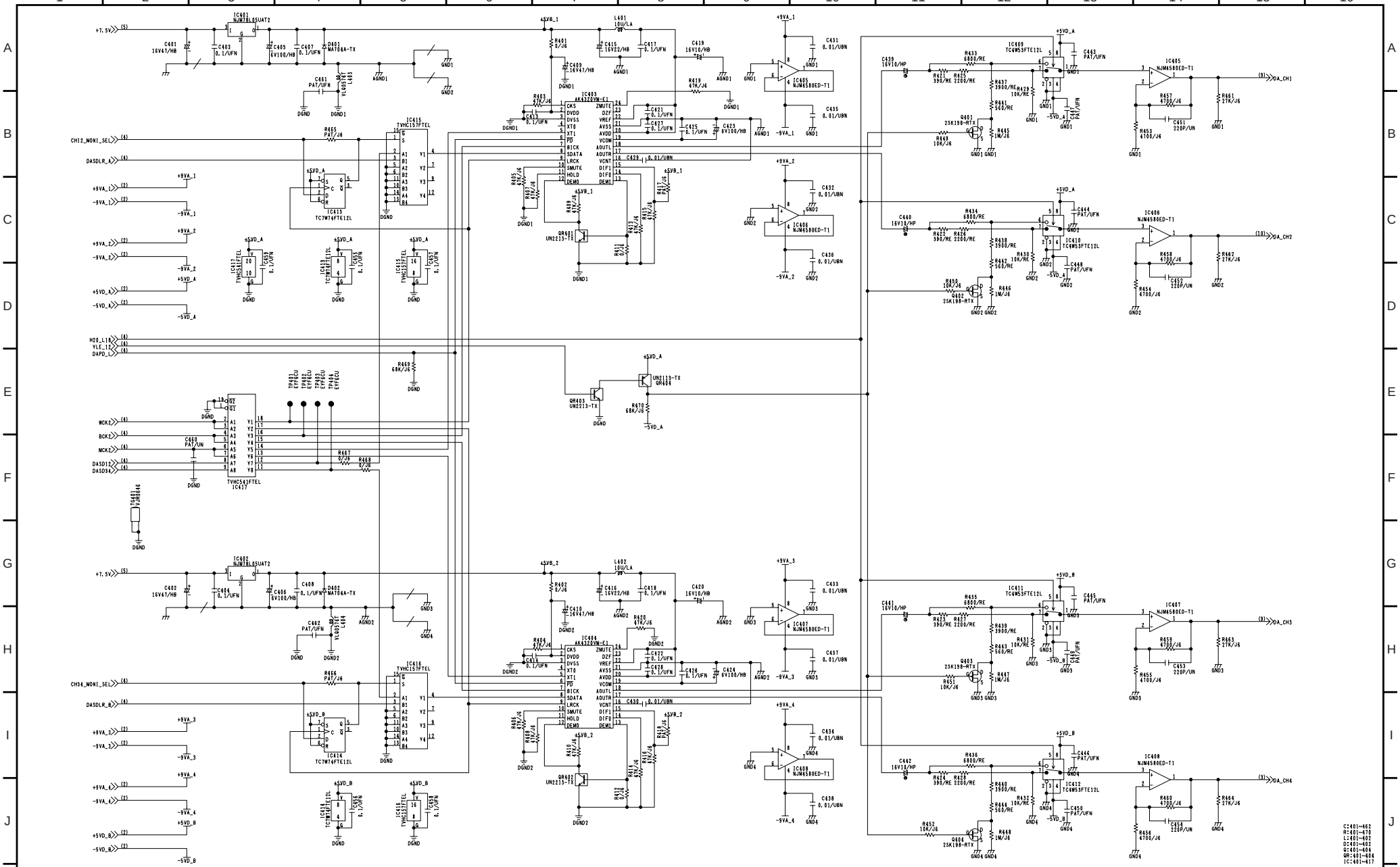

Ref No4000 Series (4401-4500)

COMPONENT NAME	H6:A_DA (DAC)	01/05
CIRCUIT BOARD NO.		DRAWING NO.
VEP84365		KR4J80 (1/5)
		SCM165

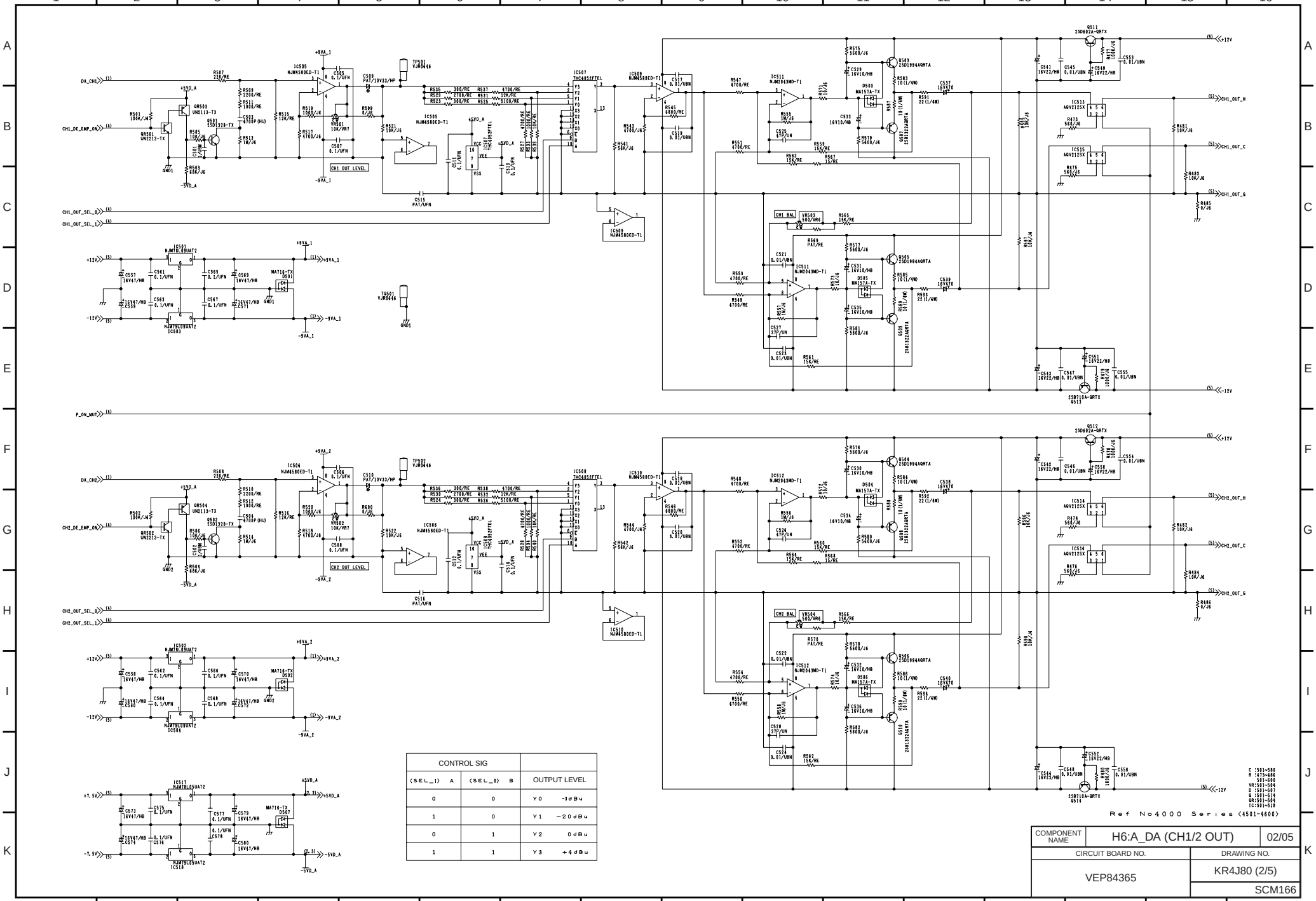

CONTROL SIG		
(SEL_1) A	(SEL_0) B	OUTPUT LEVEL
0	0	Y0 -1dBu
1	0	Y1 -20dBu
0	1	Y2 0dBu
1	1	Y3 +4dBu

COMPONENT NAME	H6:A_DA (CH1/2 OUT)	02/05
CIRCUIT BOARD NO.	DRAWING NO.	
VEP84365	KR4J80 (2/5)	
	SCM166	

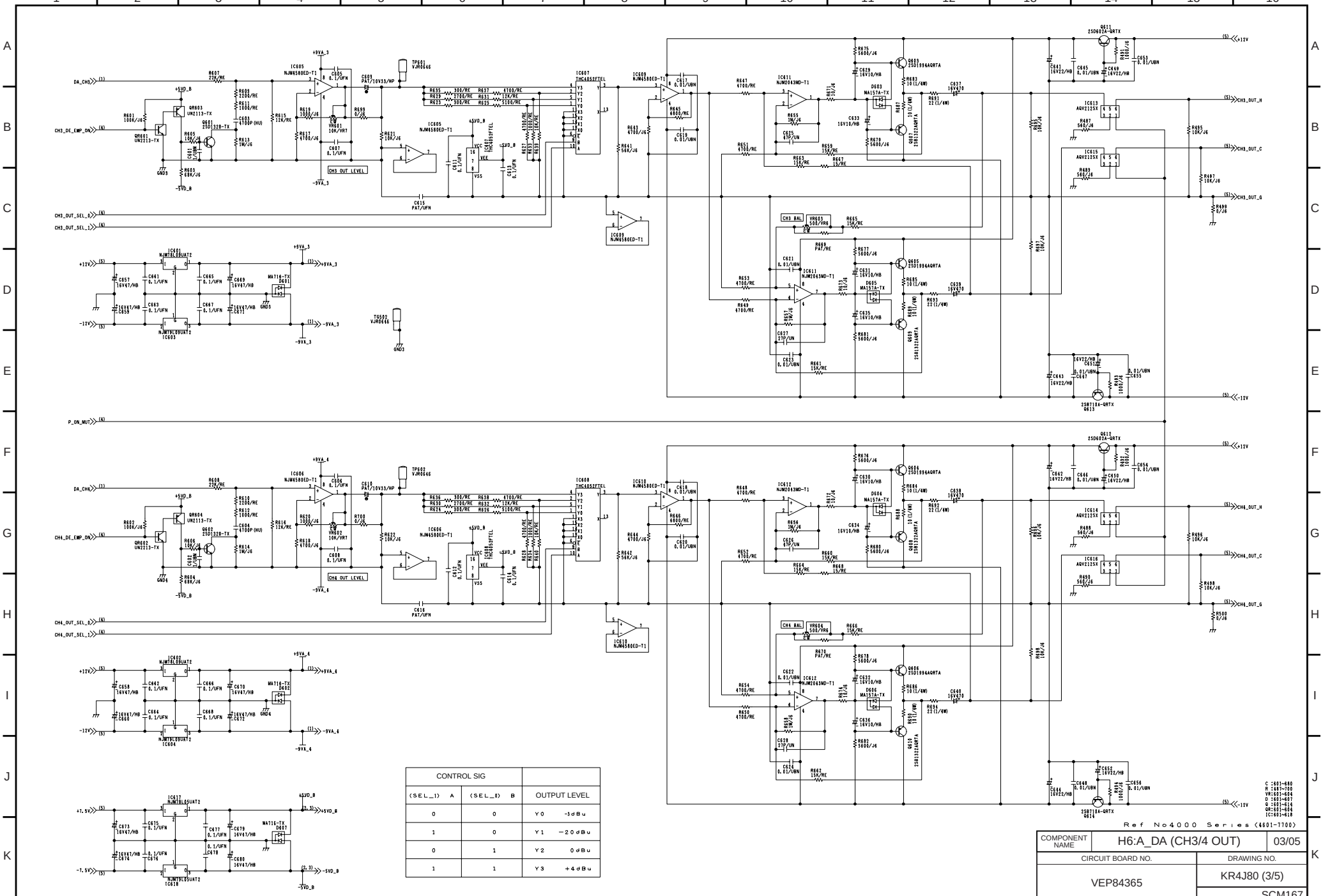

CONTROL SIG		
(SEL_1) A	(SEL_0) B	OUTPUT LEVEL
0	0	Y0 -1dBu
1	0	Y1 -20dBu
0	1	Y2 0dBu
1	1	Y3 +4dBu

COMPONENT NAME	H6:A_DA (CH3/4 OUT)	03/05
CIRCUIT BOARD NO.		DRAWING NO.
VEP84365		KR4J80 (3/5)
		SCM167

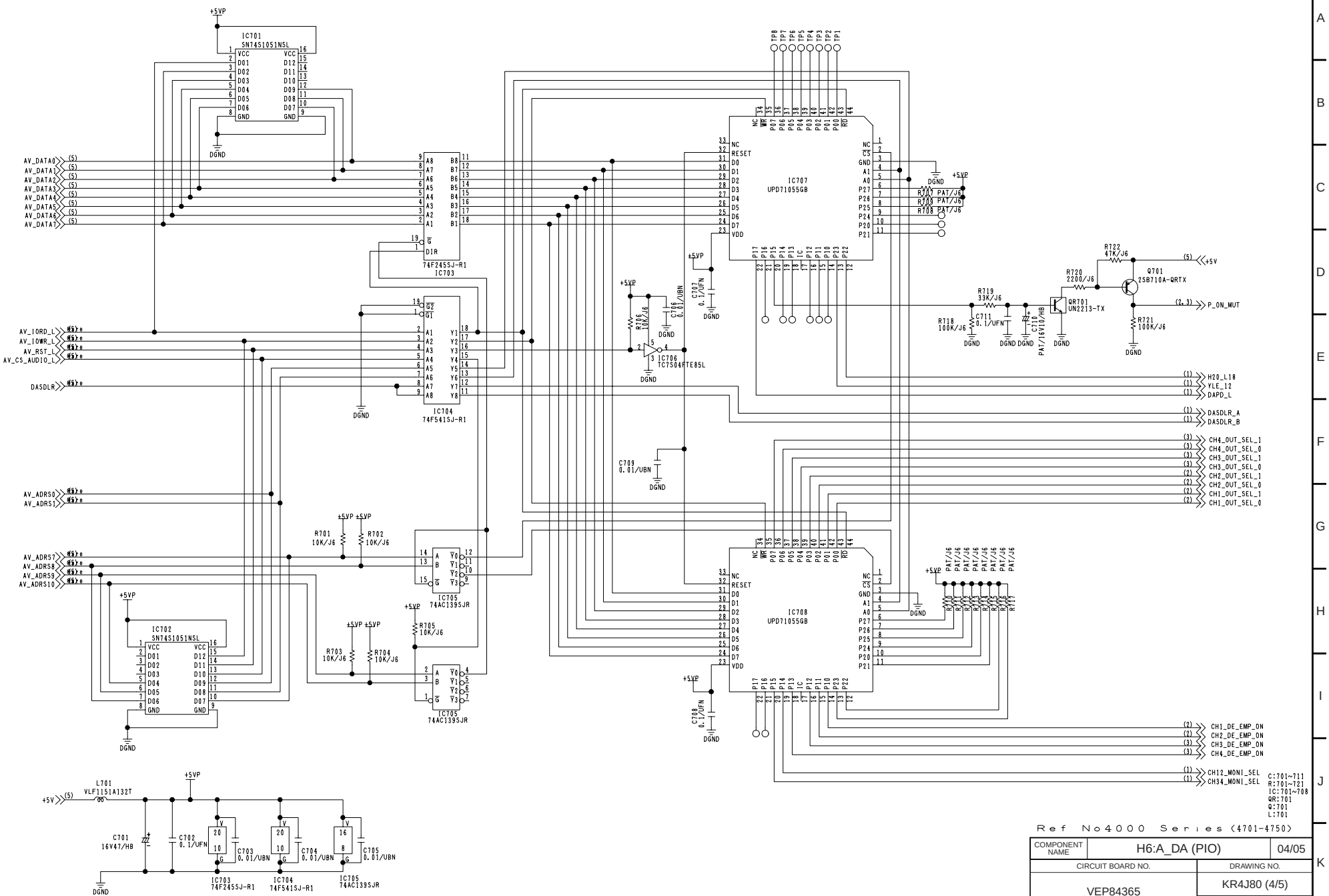
IC701
SN74S1051NSL
IC702
SN74S1051NSL
IC703
74F2455J-R1
IC704
74F5415J-R1
IC705
74AC139SJR
IC706
TC7S04FTE85L
IC707
UPD71055GB
IC708
UPD71055GB
Q701
2SB710A-QRTX
QR701
UN2213-TX
L701
VLF1151A132T
AV_DATA0
AV_DATA1
AV_DATA2
AV_DATA3
AV_DATA4
AV_DATA5
AV_DATA6
AV_DATA7
AV_IORD_L
AV_IOWR_L
AV_RST_L
AV_CS_AUDIO_L
DASDLR
AV_ADRS0
AV_ADRS1
AV_ADRS7
AV_ADRS8
AV_ADRS9
AV_ADRS10
P_ON_MUT
H20_L18
YLE_12
DAPD_L
DASDLR_A
DASDLR_B
CH4_OUT_SEL_1
CH4_OUT_SEL_0
CH3_OUT_SEL_1
CH3_OUT_SEL_0
CH2_OUT_SEL_1
CH2_OUT_SEL_0
CH1_OUT_SEL_1
CH1_OUT_SEL_0
CH1_DE_EMP_ON
CH2_DE_EMP_ON
CH3_DE_EMP_ON
CH4_DE_EMP_ON
CH12_MONI_SEL
CH34_MONI_SEL
C:701~711
R:701~721
IC:701~708
QR:701
Q:701
L:701
Ref No4000 Series (4701-4750)
COMPONENT NAME
H6:A_DA (PIO)
04/05
CIRCUIT BOARD NO.
DRAWING NO.
VEP84365
KR4J80 (4/5)
SCM168

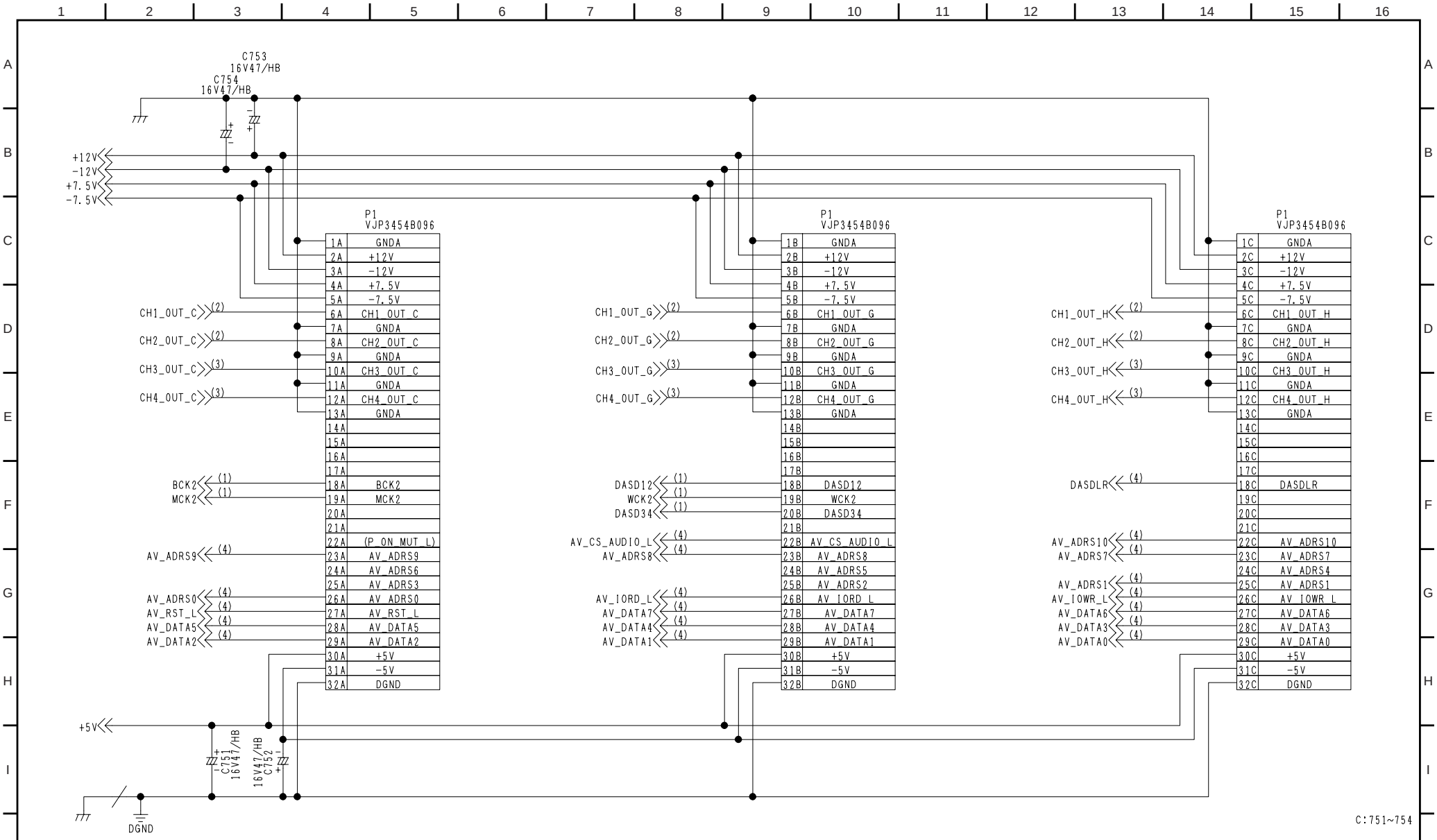

COMPONENT NAME	H6:A_DA (CONNECTOR)	05/05
CIRCUIT BOARD NO.		DRAWING NO.
VEP84365		KR4J80 (5/5)
		SCM169

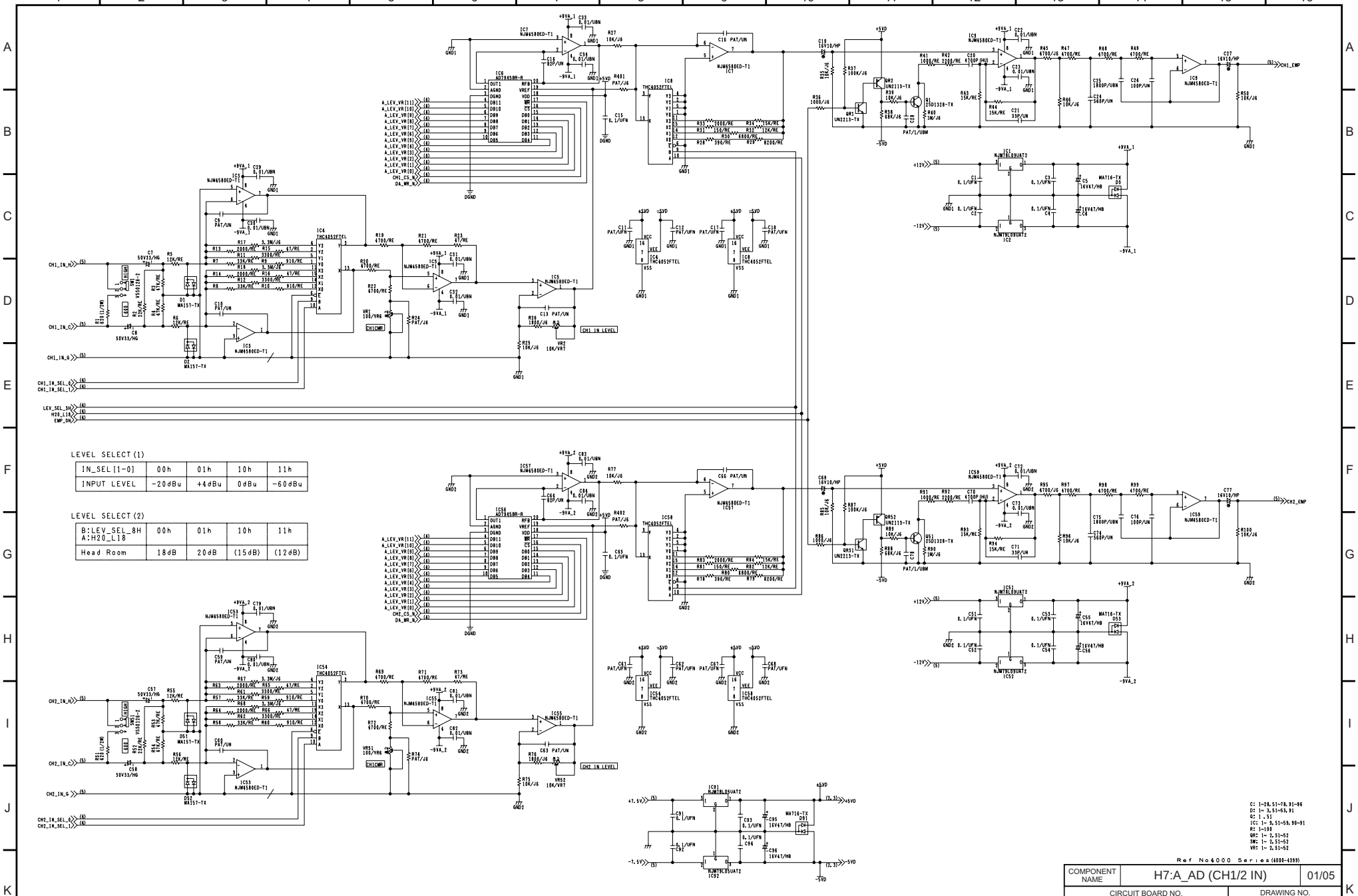

LEVEL SELECT(1)

IN_SEL[1-0]	00h	01h	10h	11h
INPUT LEVEL	-20dBu	+4dBu	0dBu	-60dBu

LEVEL SELECT(2)

B:LEV_SEL_8H A:H20_L18	00h	01h	10h	11h
Head Room	18dB	20dB	(15dB)	(12dB)

C: 1-28,51-78,91-96
D: 1- 3,51-53,91
Q: 1- 51
IC: 1- 9,51-59,90-91
R: 1-100
WR: 1- 2,51-52
SW: 1- 2,51-52
VR: 1- 2,51-52

Ref No4000 Series(4000-4399)

COMPONENT NAME	H7:A_AD (CH1/2 IN)	01/05
CIRCUIT BOARD NO.	DRAWING NO.	
VEP84364	KR4J79 (1/5)	
	SCM170	

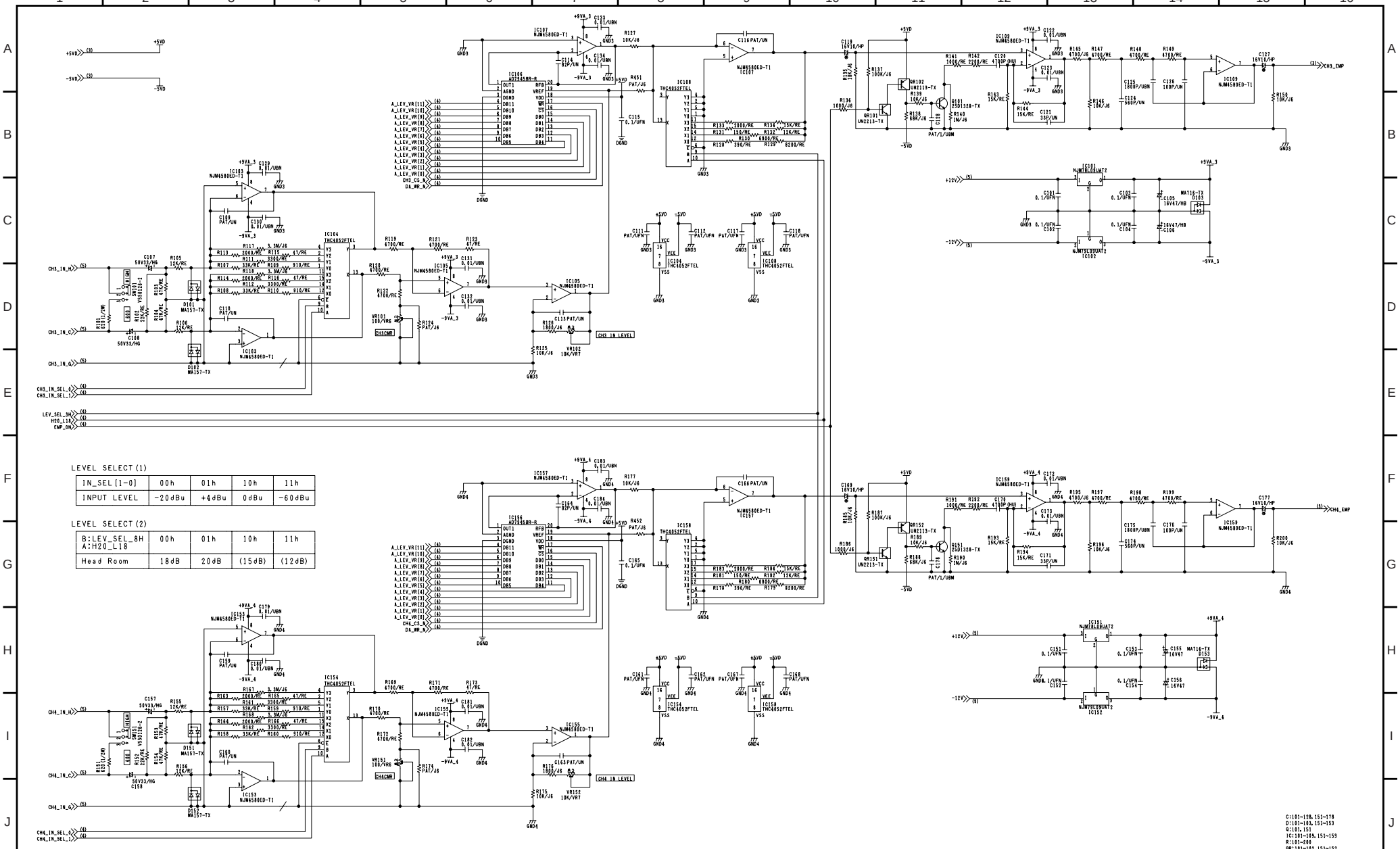

LEVEL SELECT(1)

IN_SEL[1-0]	00h	01h	10h	11h
INPUT LEVEL	-20dBu	+4dBu	0dBu	-60dBu

LEVEL SELECT(2)

B:LEV_SEL_8H A:H20_L18	00h	01h	10h	11h
Head Room	18dB	20dB	(15dB)	(12dB)

C:101-128,151-178
D:101-103,151-153
Q:101,151
IC:101-104,151-153
R:101-200
QR:101-102,151-152
SW:101-102,151-152
VR:101-102,151-152

Ref No4000 Series(4000-4399)

COMPONENT NAME	H7:A_AD (CH3/4 IN)	02/05
CIRCUIT BOARD NO.		DRAWING NO.
VEP84364		KR4J79 (2/5)
		SCM171

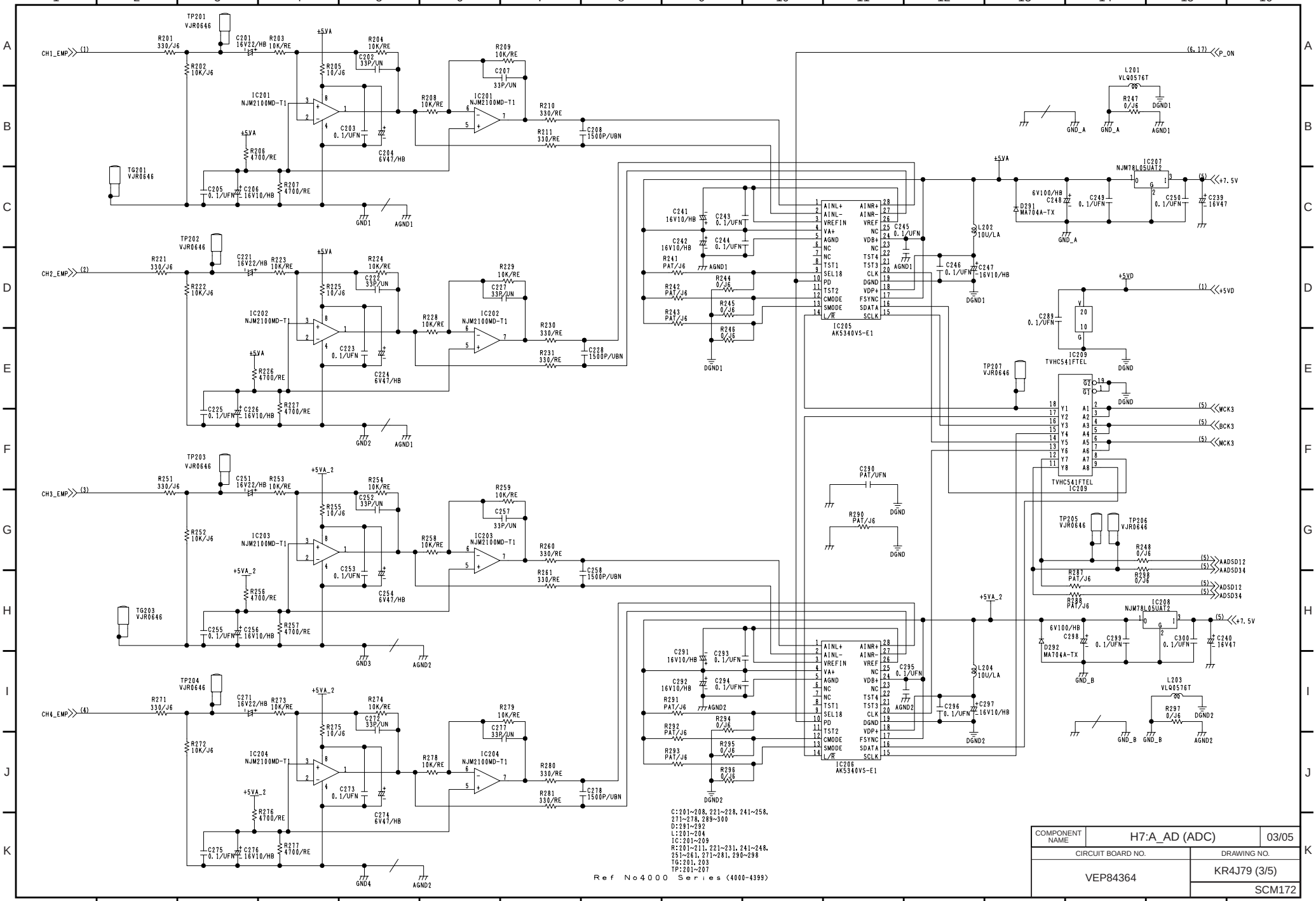
CH1_EMP
CH2_EMP
CH3_EMP
CH4_EMP
P_ON
+7.5V
+5VD
WCK3
BCK3
MCK3
AADSD12
AADSD34
ADSD12
ADSD34
IC201 NJM2100MD-T1
IC202 NJM2100MD-T1
IC203 NJM2100MD-T1
IC204 NJM2100MD-T1
IC205 AK5340VS-E1
IC206 AK5340VS-E1
IC207 NJM78L05UAT2
IC208 NJM78L05UAT2
IC209 TVHC541FTEL
L201 VLQ0576T
L203 VLQ0576T
L202 10U/LA
L204 10U/LA
D291 MA704A-TX
D292 MA704A-TX
C:201~208, 221~228, 241~258, 271~278, 289~300
D:291~292
L:201~204
IC:201~209
R:201~211, 221~231, 241~248, 251~261, 271~281, 290~298
TG:201, 203
TP:201~207
Ref No4000 Series (4000-4399)
COMPONENT NAME
H7:A_AD (ADC)
03/05
CIRCUIT BOARD NO.
VEP84364
DRAWING NO.
KR4J79 (3/5)
SCM172

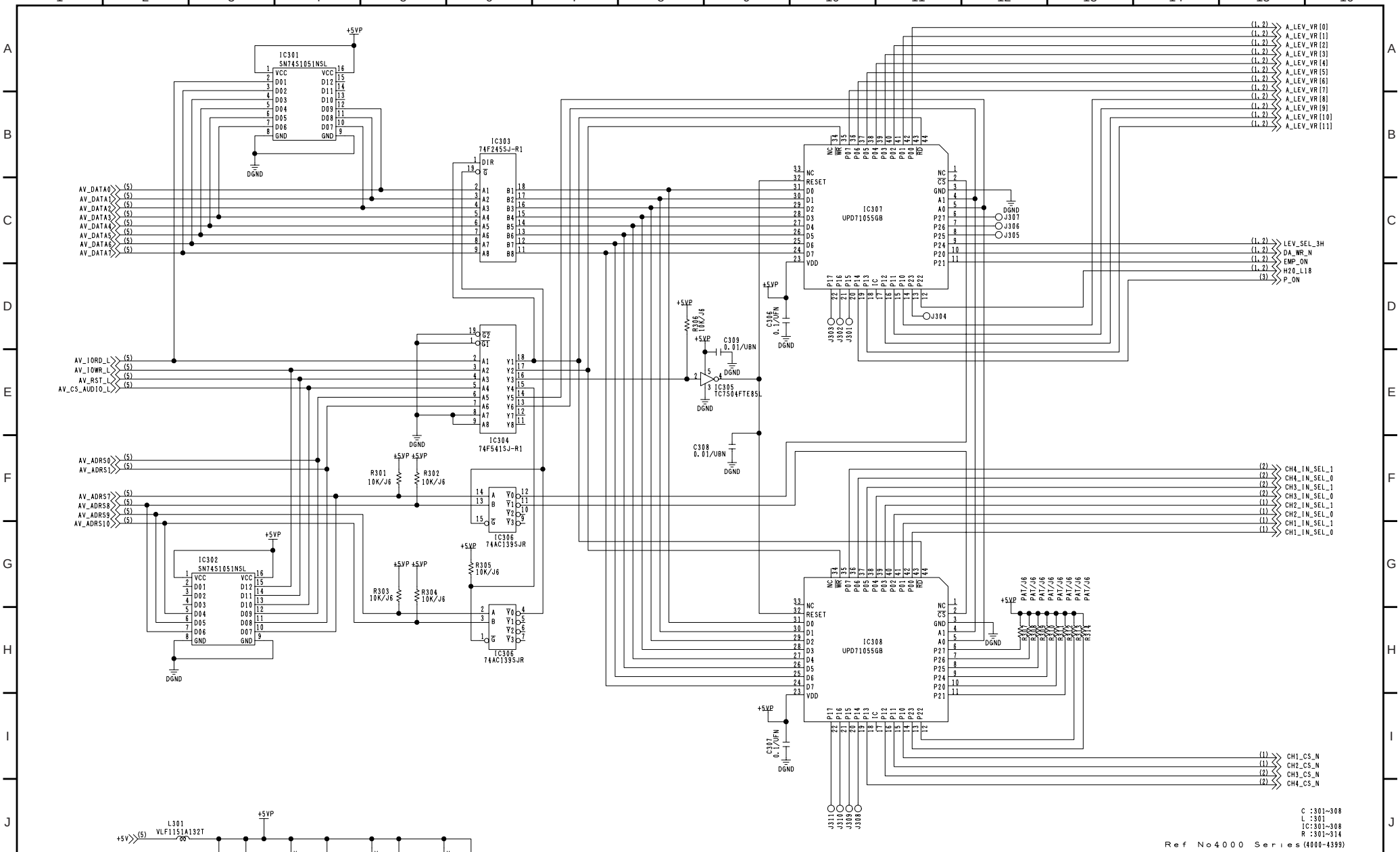

COMPONENT NAME	H7:A_AD (PIO)	04/05
CIRCUIT BOARD NO.		DRAWING NO.
VEP84364		KR4J79 (4/5)
		SCM173

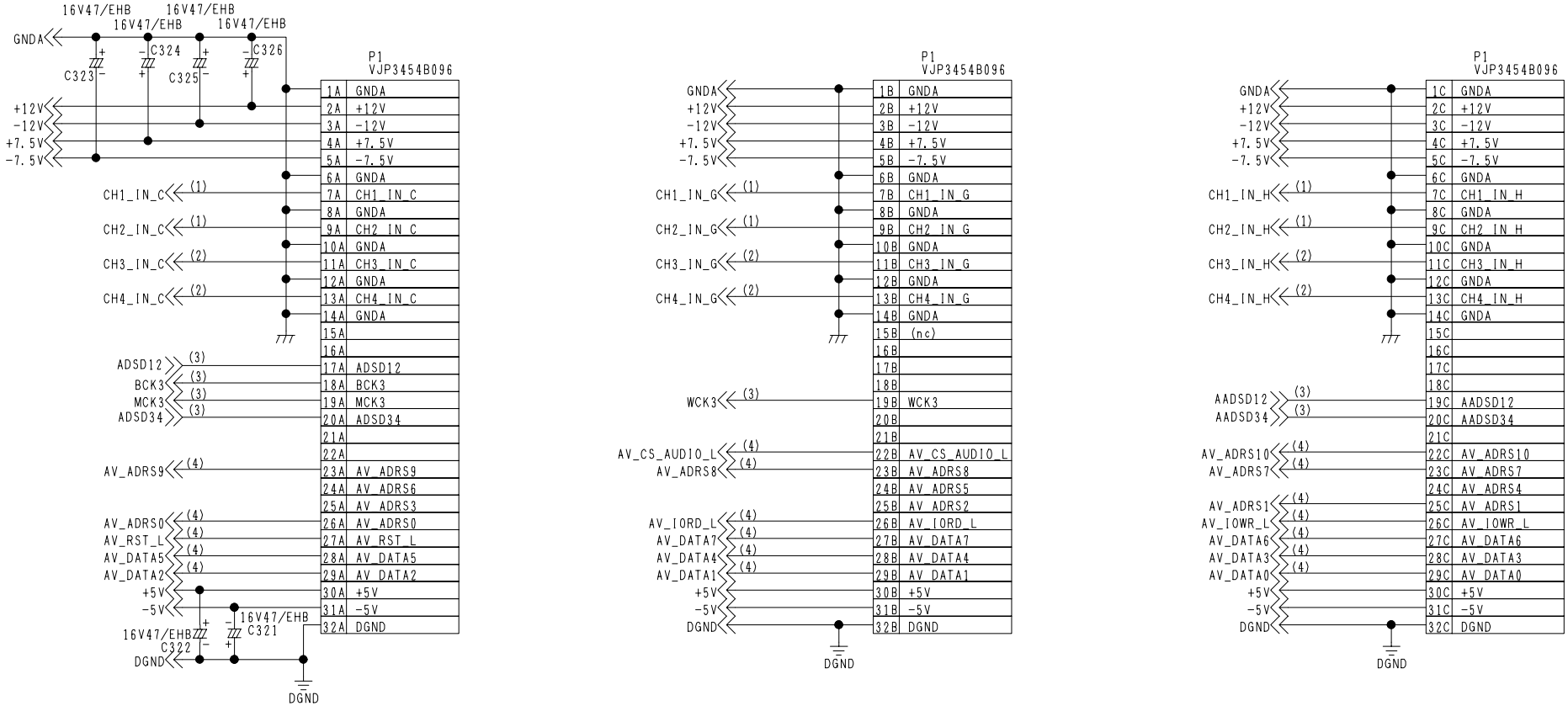

Ref No4000 Series(4000-4399)

COMPONENT NAME	H7:A_AD (CONNECT)	05/05
CIRCUIT BOARD NO.	DRAWING NO.	
VEP84364	KR4J79 (5/5)	
	SCM174	

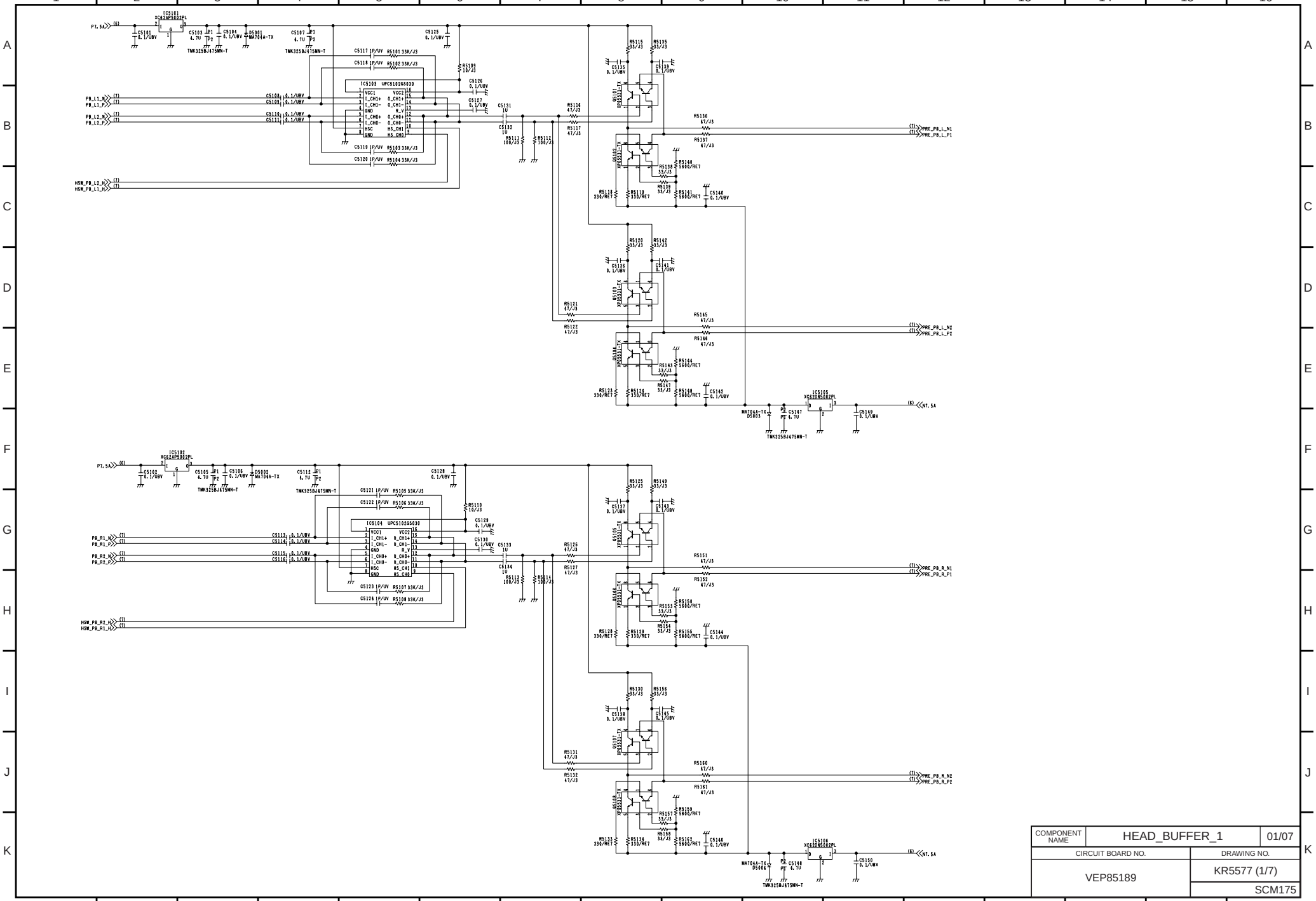

COMPONENT NAME	HEAD_BUFFER_1	01/07
CIRCUIT BOARD NO.		DRAWING NO.
VEP85189		KR5577 (1/7)
		SCM175

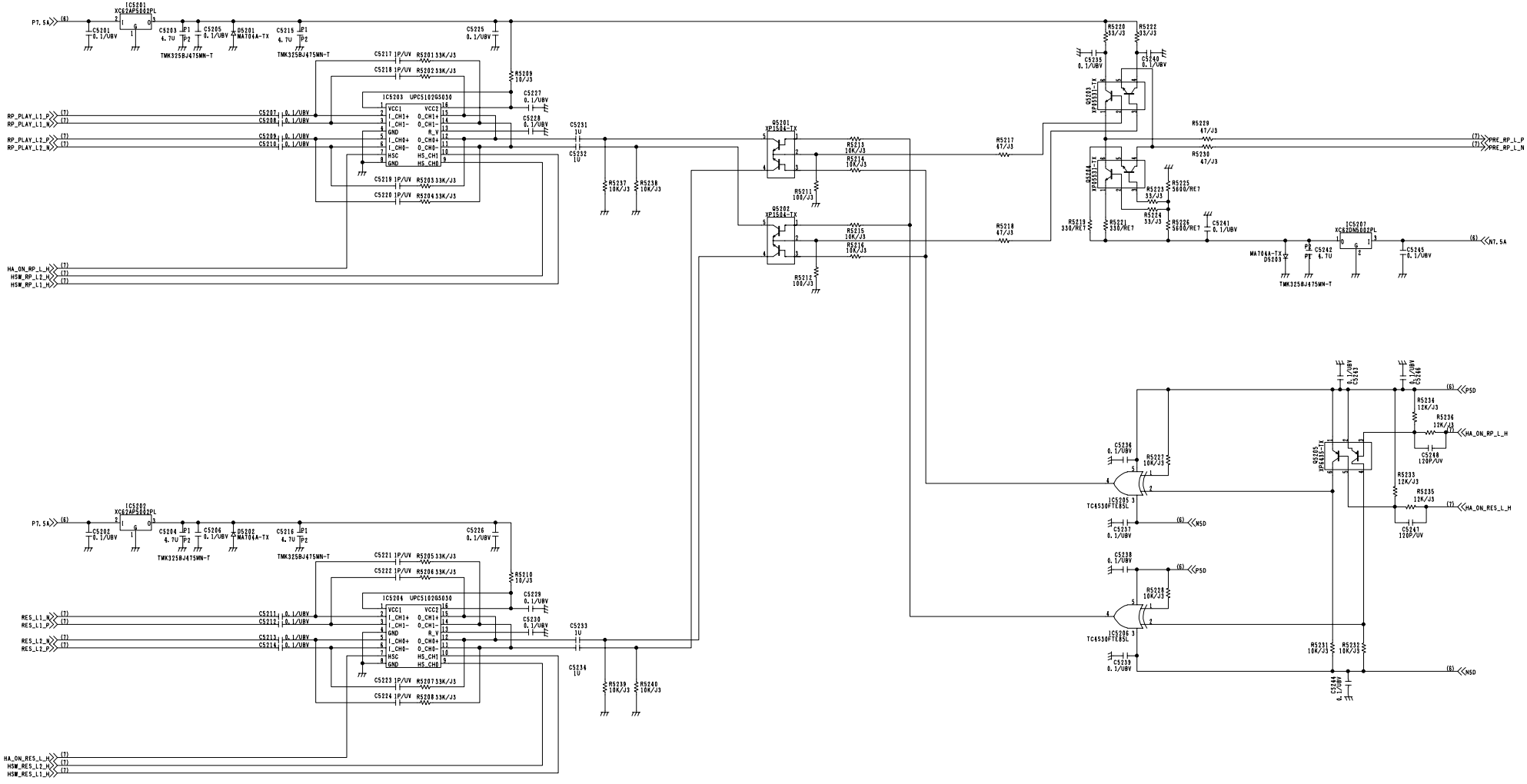

COMPONENT NAME	HEAD_BUFFER_1	02/07
CIRCUIT BOARD NO.		DRAWING NO.
VEP85189		KR5577 (2/7)
		SCM176

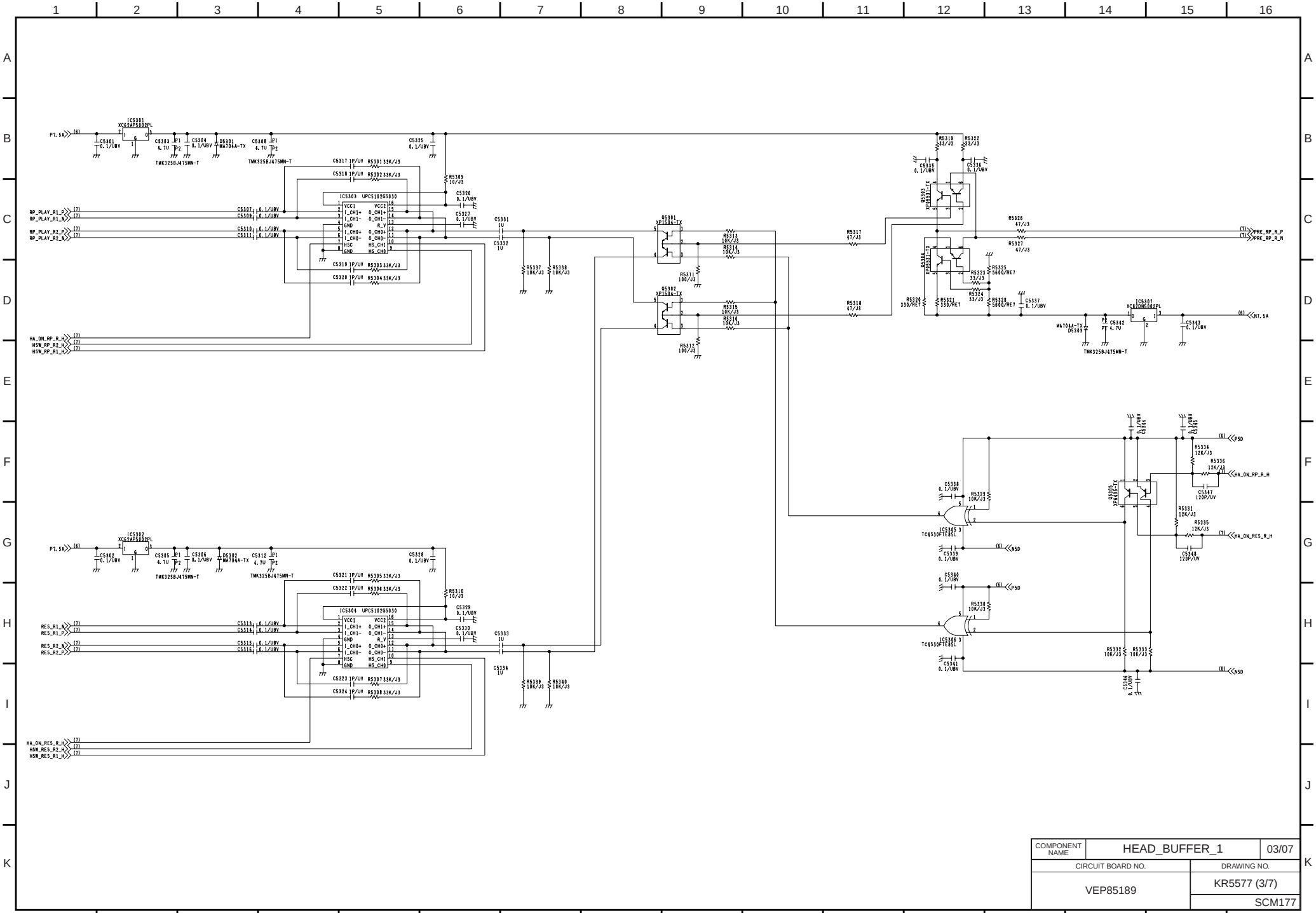

COMPONENT NAME	HEAD_BUFFER_1	03/07
CIRCUIT BOARD NO.		DRAWING NO.
VEP85189		KR5577 (3/7)
		SCM177

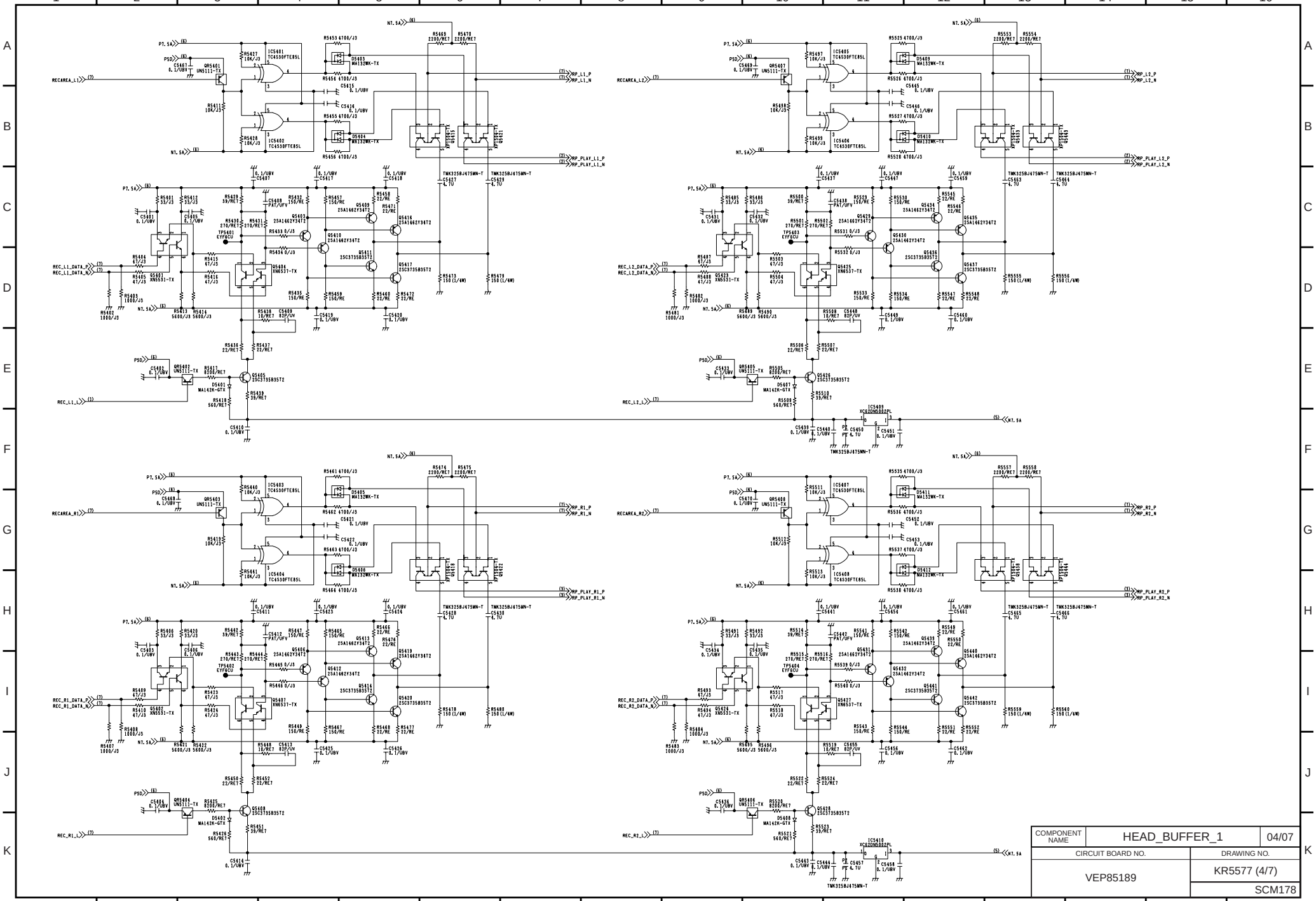

COMPONENT NAME	HEAD_BUFFER_1	04/07
CIRCUIT BOARD NO.		DRAWING NO.
VEP85189		KR5577 (4/7)
		SCM178

COMPONENT NAME	HEAD_BUFFER_1	05/07
CIRCUIT BOARD NO.		DRAWING NO.
VEP85189		KR5577 (5/7)
		SCM179

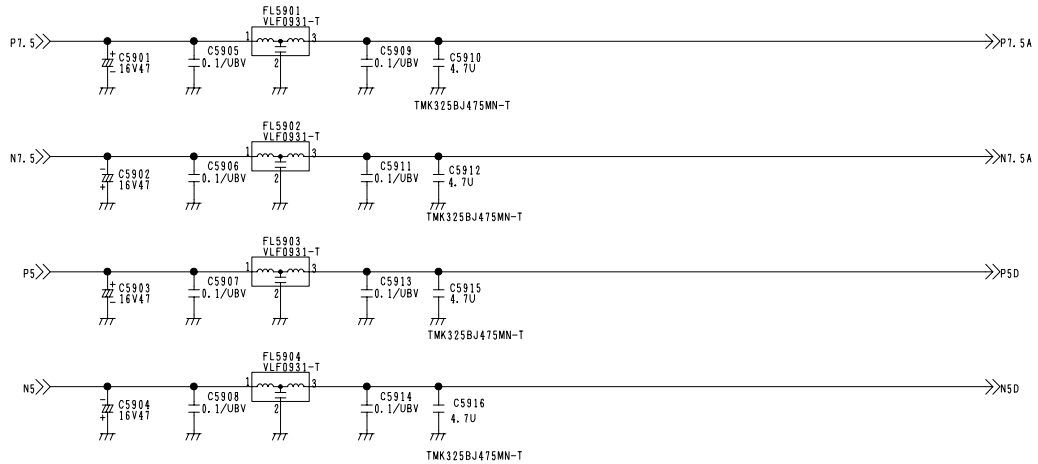

COMPONENT NAME	HEAD_BUFFER_1	06/07
CIRCUIT BOARD NO.		DRAWING NO.
VEP85189		KR5577 (6/7)
		SCM180

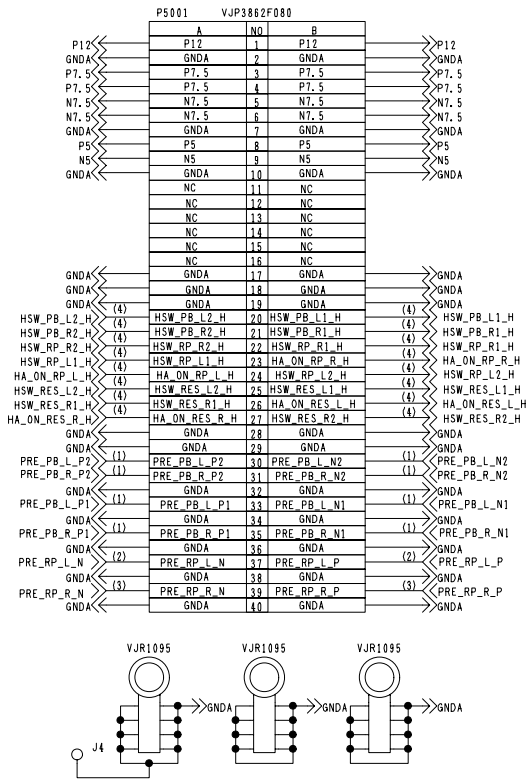

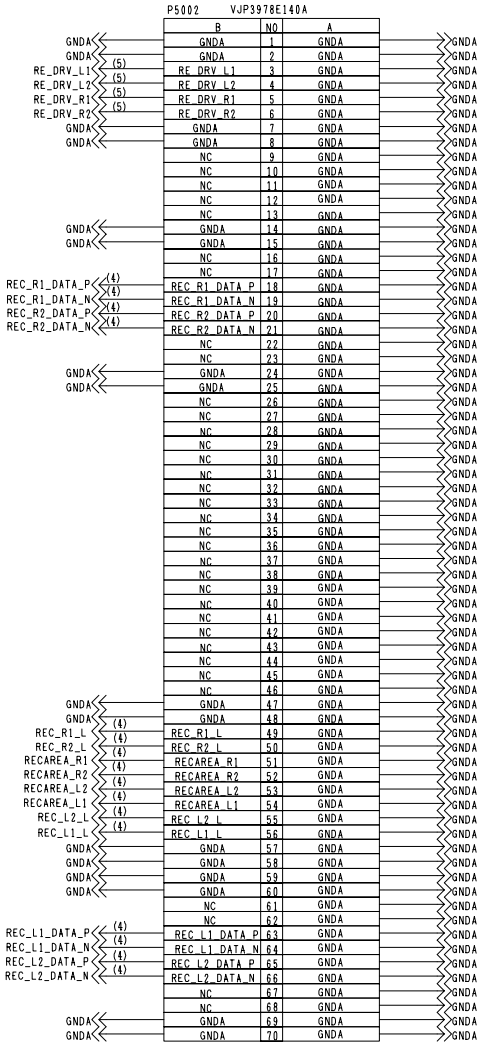

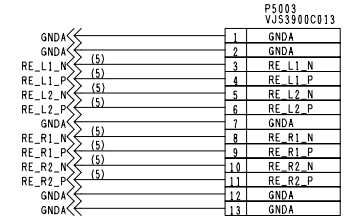

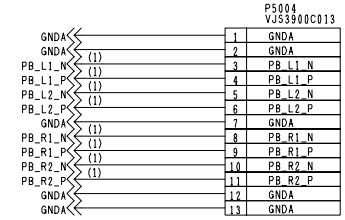

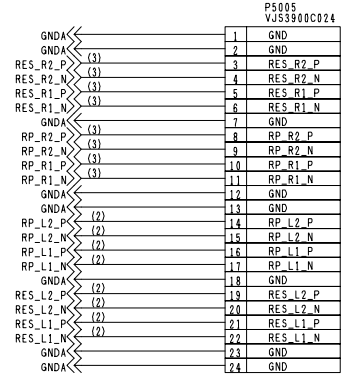

COMPONENT NAME	HEAD_BUFFER_1	07/07
CIRCUIT BOARD NO.		DRAWING NO.
VEP85189		KR5577 (7/7)
		SCM181

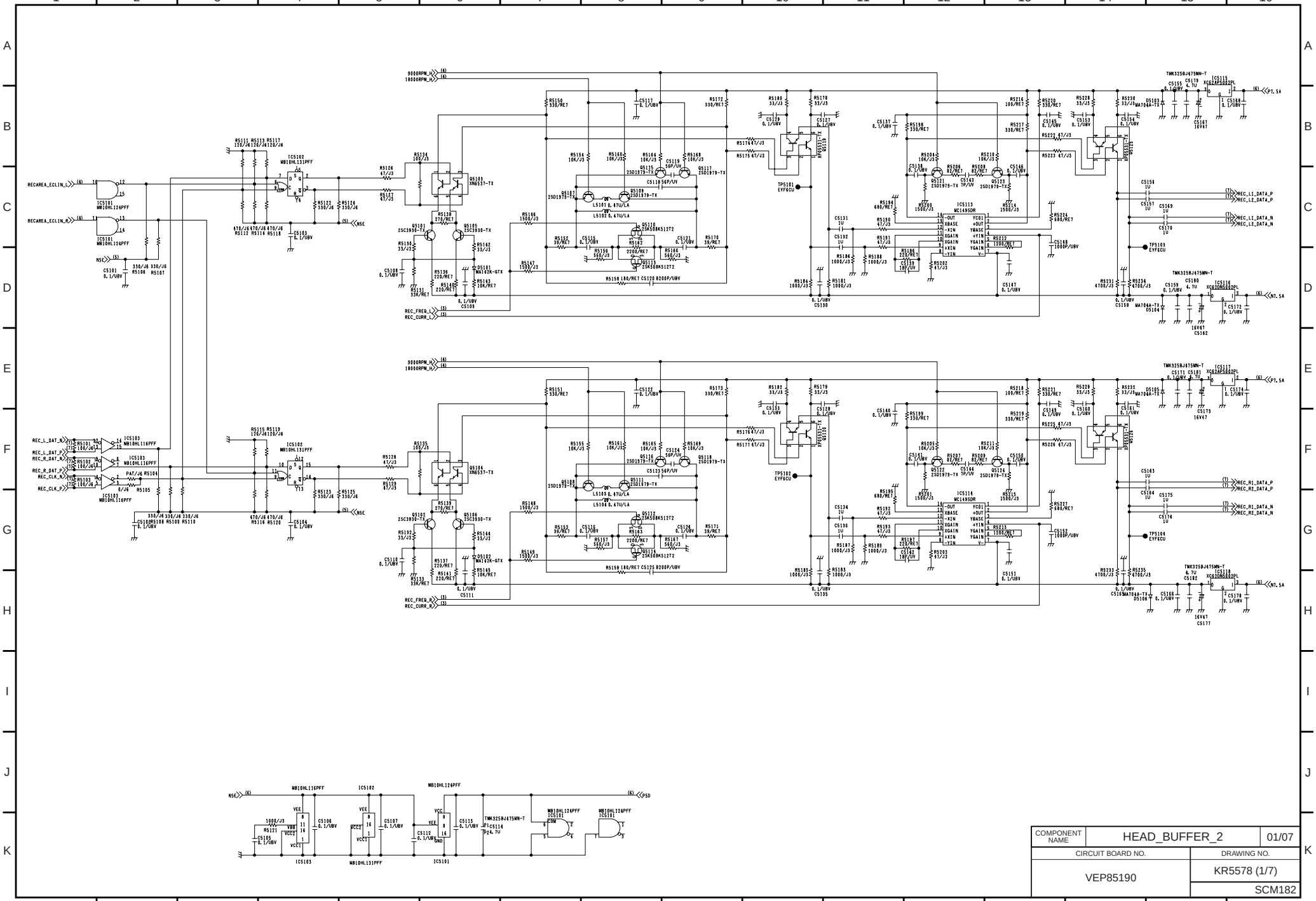

COMPONENT NAME	HEAD_BUFFER_2	01/07
CIRCUIT BOARD NO.		DRAWING NO.
VEP85190		KR5578 (1/7)
		SCM182

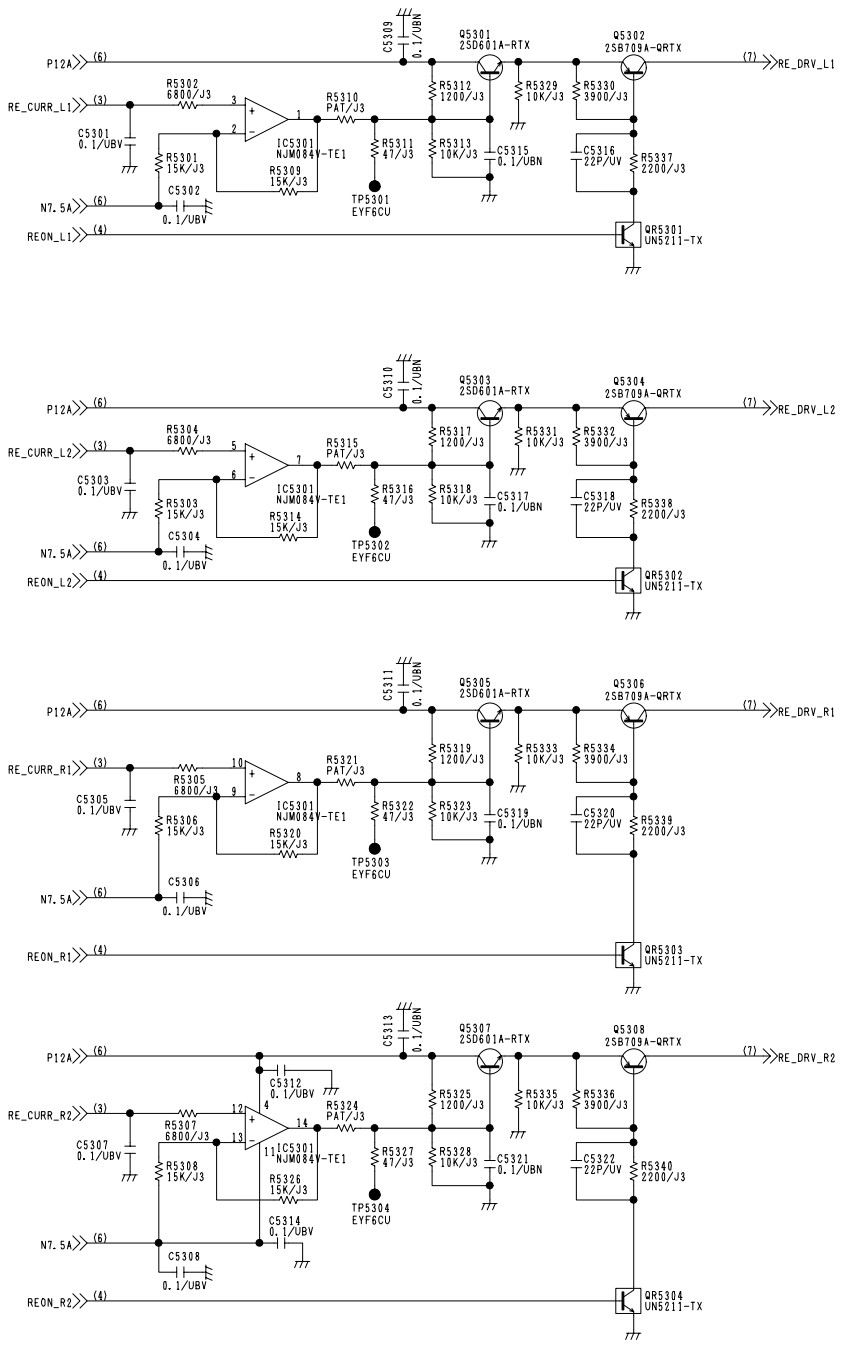

COMPONENT NAME	HEAD_BUFFER_2	01/07
CIRCUIT BOARD NO.		DRAWING NO.
VEP85190		KR5578 (2/7)
		SCM183

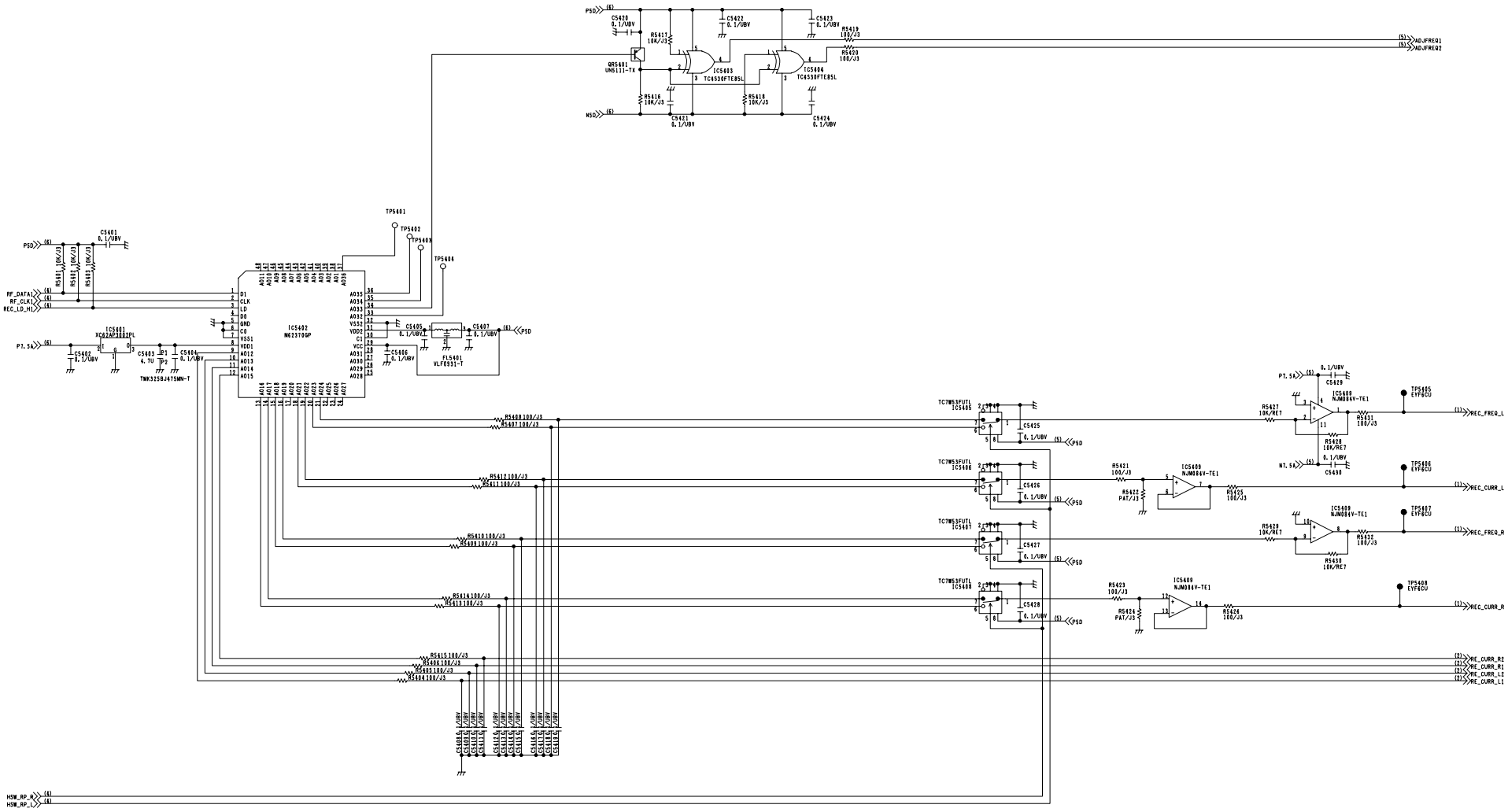

COMPONENT NAME	HEAD_BUFFER_2	03/07
CIRCUIT BOARD NO.		DRAWING NO.
VEP85190		KR5578 (3/7)
		SCM184

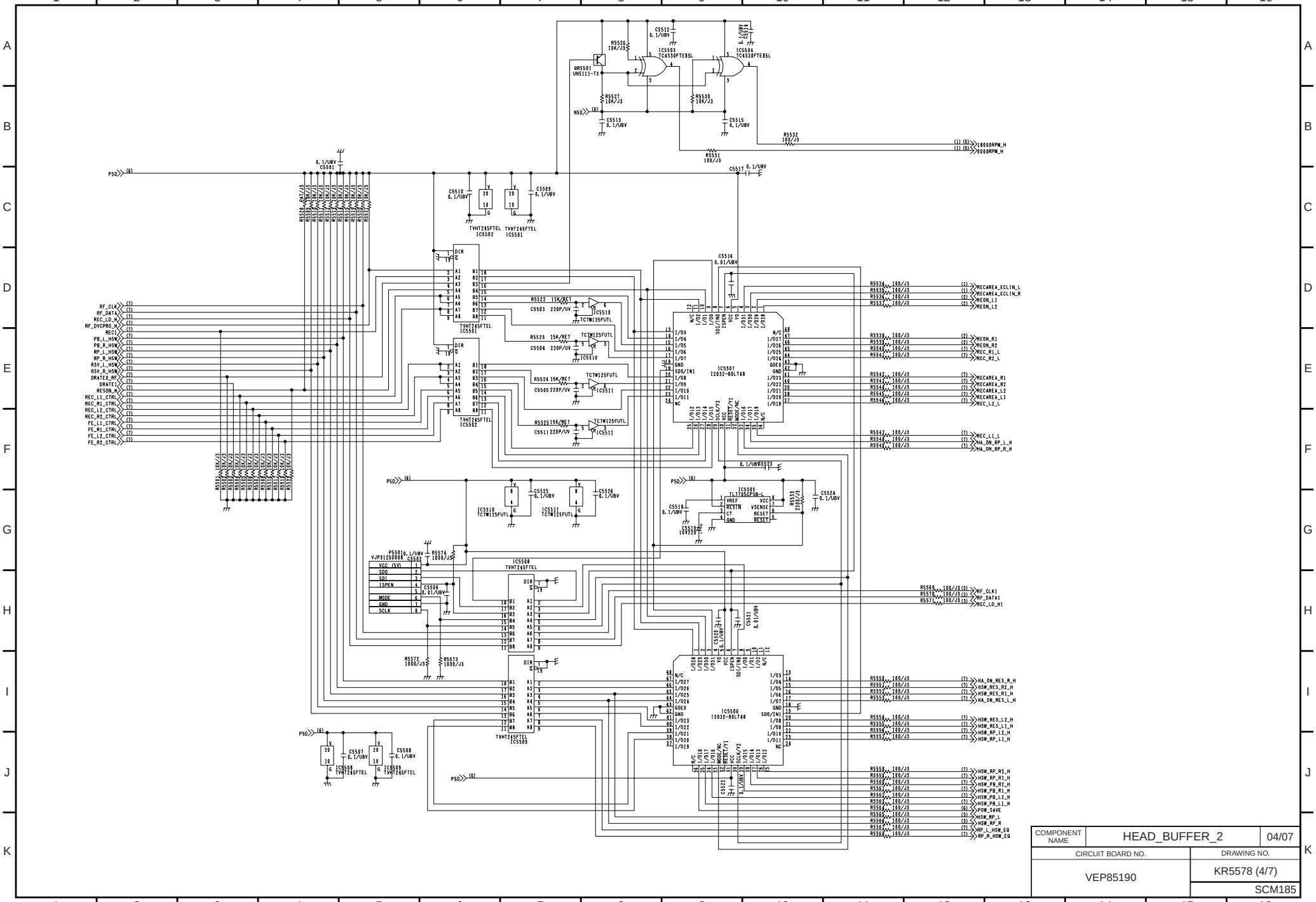

COMPONENT NAME	HEAD_BUFFER_2	04/07
CIRCUIT BOARD NO.		DRAWING NO.
VEP85190		KR5578 (4/7)
		SCM185

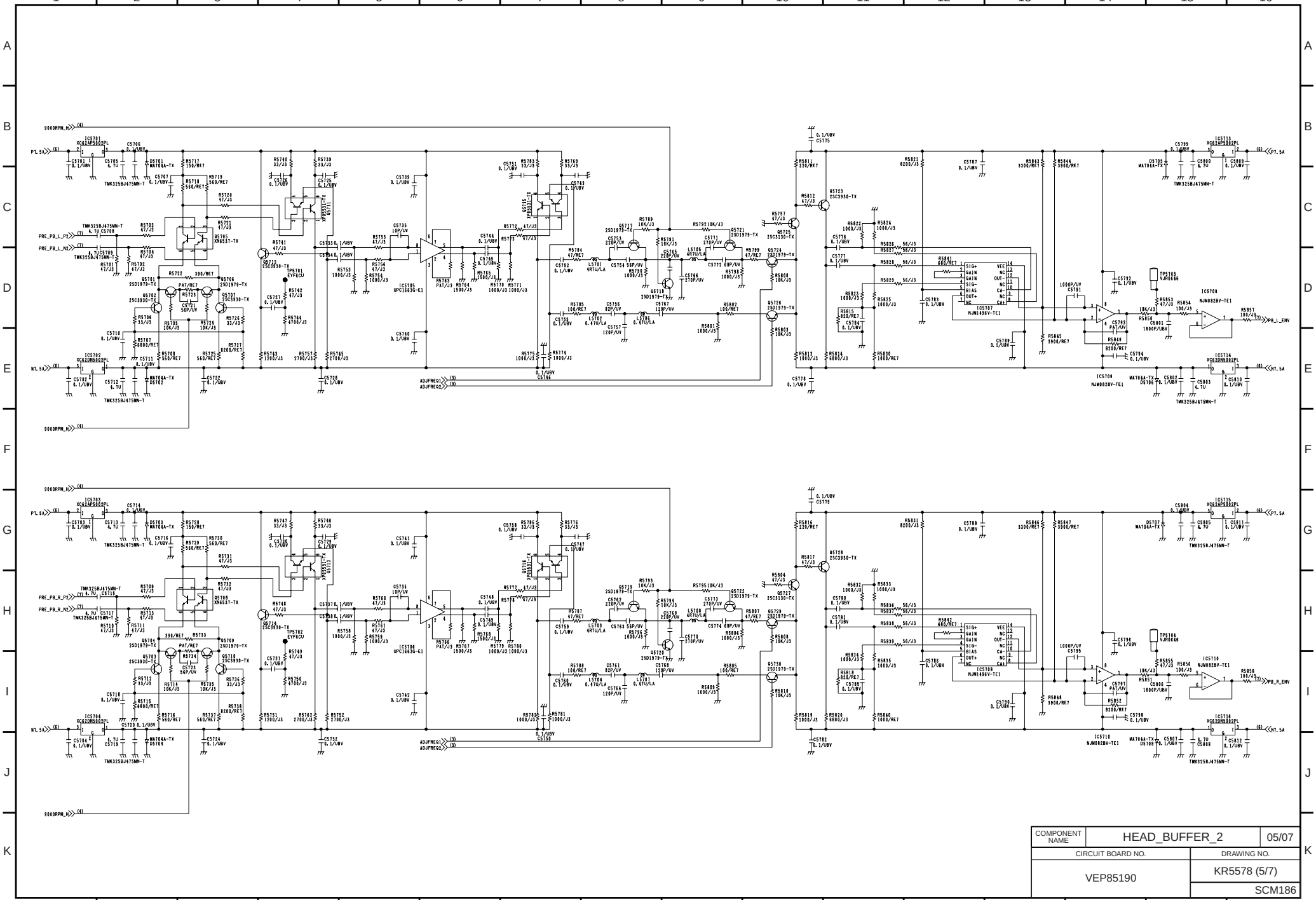

COMPONENT NAME	HEAD_BUFFER_2	05/07
CIRCUIT BOARD NO.		DRAWING NO.
VEP85190		KR5578 (5/7)
		SCM186

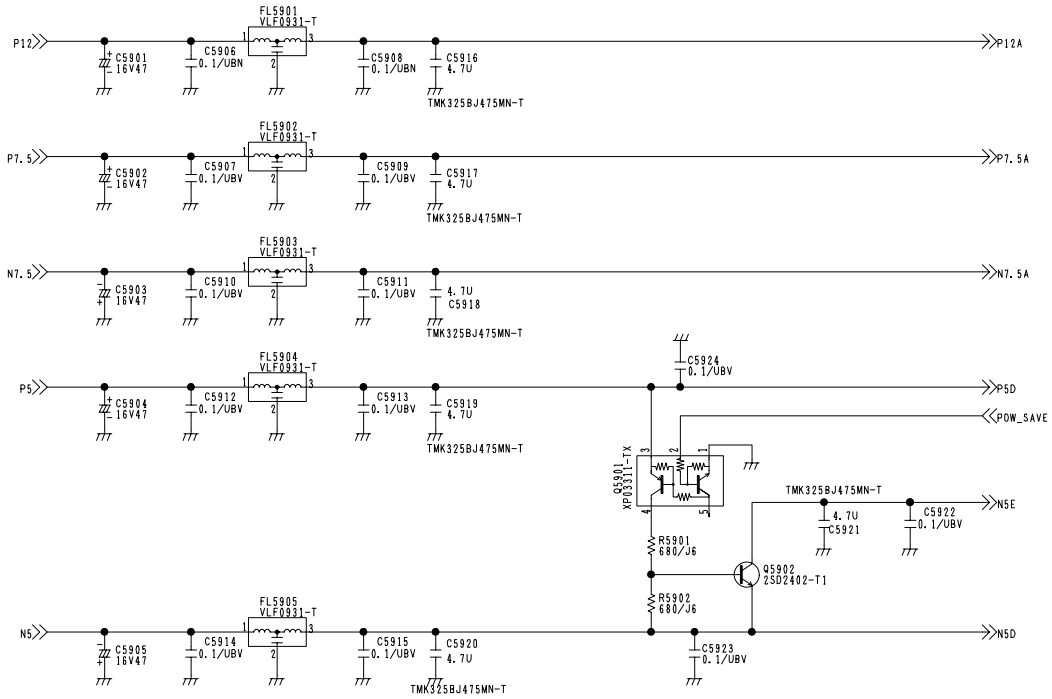

COMPONENT NAME	HEAD_BUFFER_2	06/07
CIRCUIT BOARD NO.		DRAWING NO.
VEP85190		KR5578 (6/7)
		SCM187

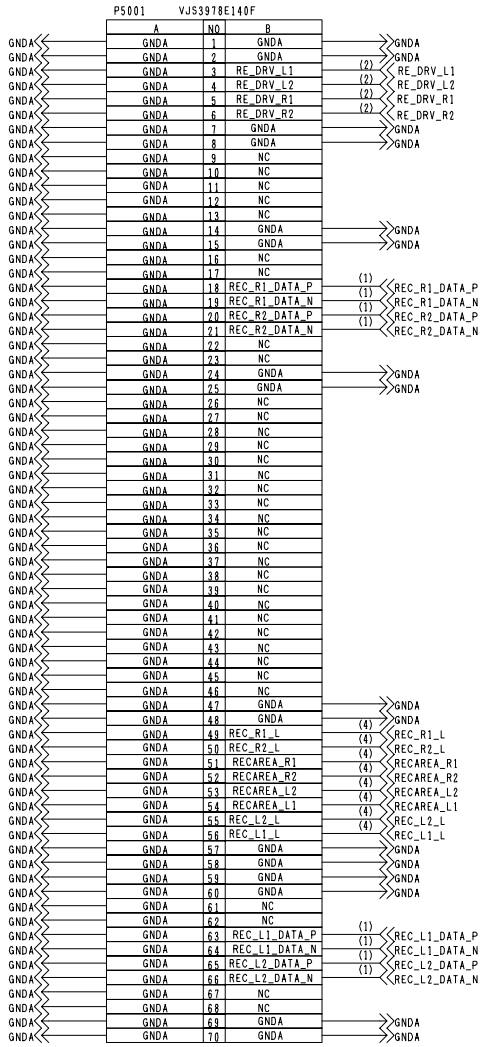

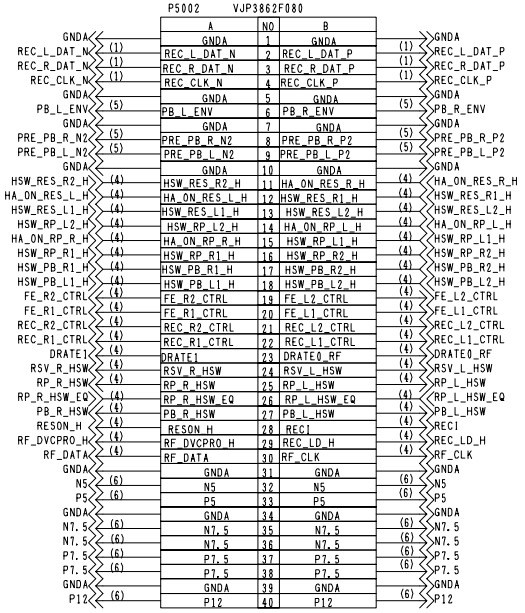

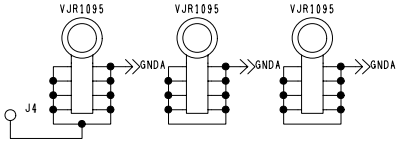

COMPONENT NAME	HEAD_BUFFER_2	07/07
CIRCUIT BOARD NO.		DRAWING NO.
VEP85190		KR5578 (7/7)
		SCM188

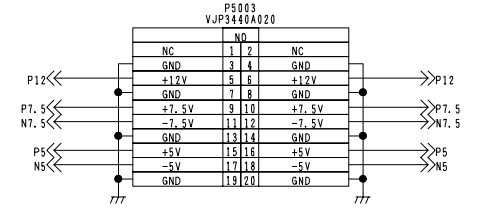

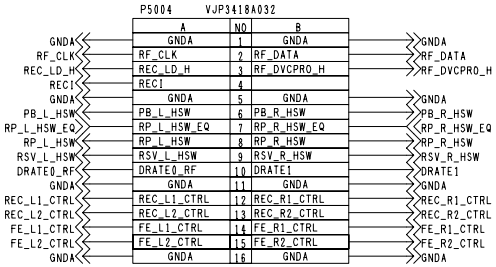

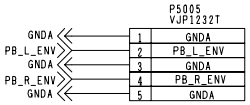

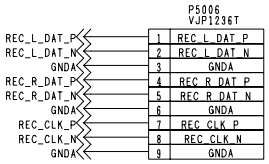

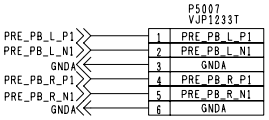

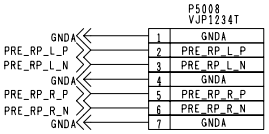

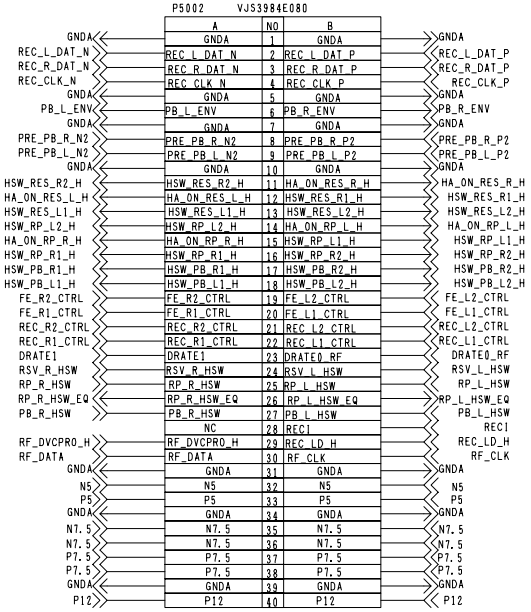

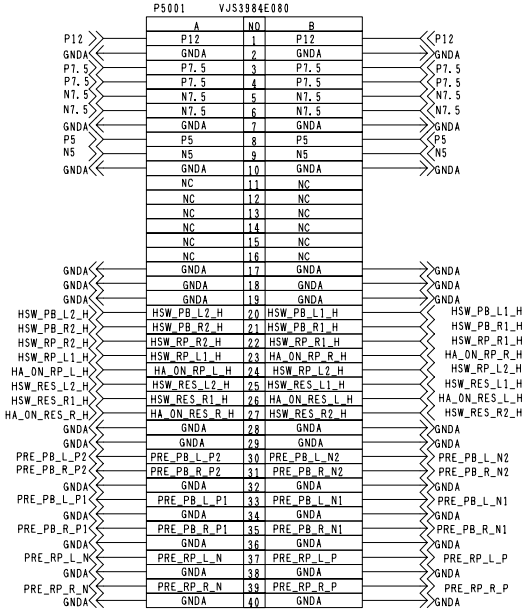

COMPONENT NAME	RF_MOTHER	01/01
CIRCUIT BOARD NO.		DRAWING NO.
VEP85192		KR5580 (1/1)
		SCM189

F1
SERVO

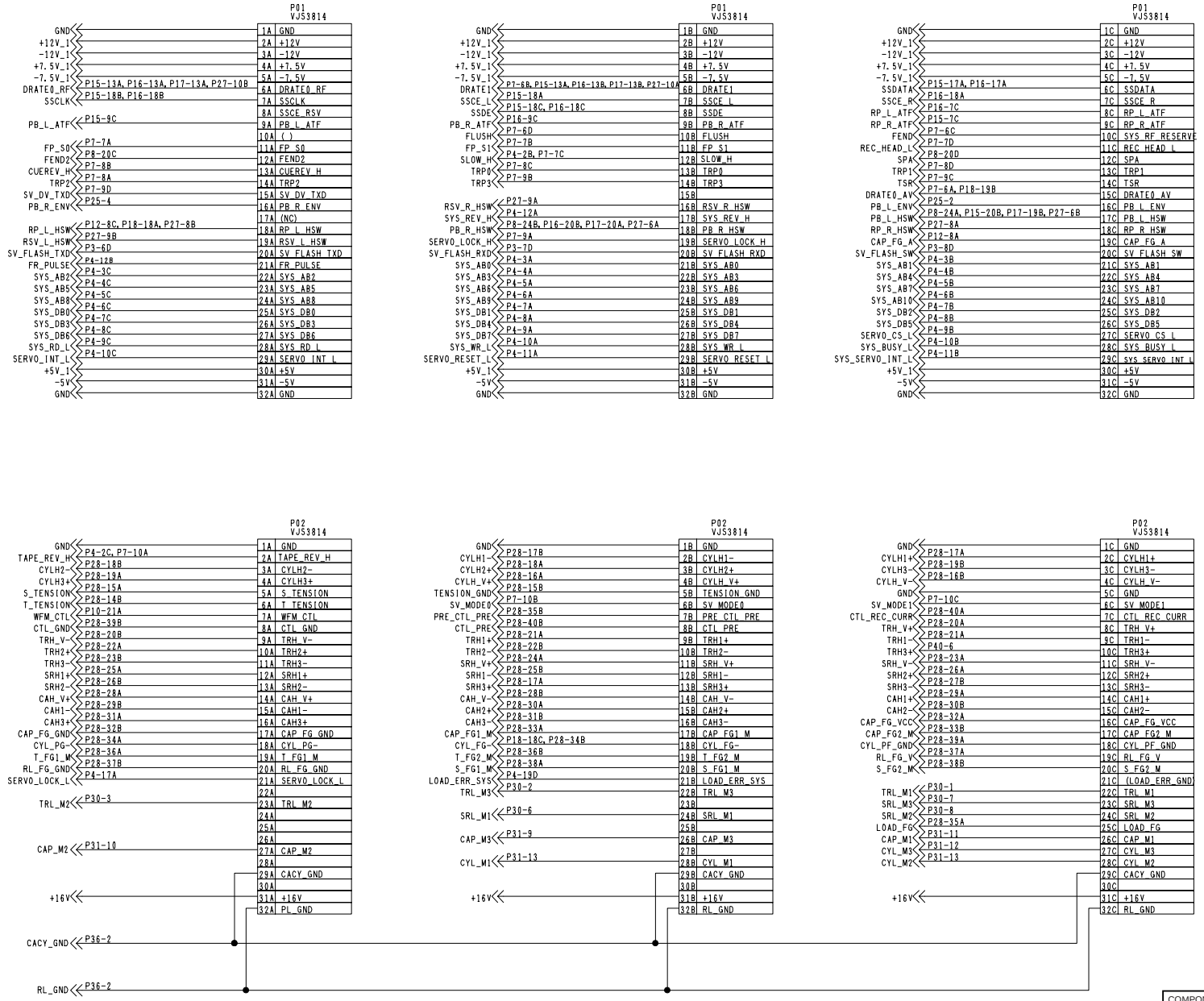

COMPONENT NAME	VTR_MOTHER (F1)	01/13
CIRCUIT BOARD NO.	DRAWING NO.	
VEP80B76	KR0P40 (1/13)	
	SCM190	

F2 SYSCON

P03 VJS3510 (A)

Signal	Connection	Pin	Name
GND		1A	GND
+12V_1		2A	+12V
-12V_1		3A	-12V
+7.5V_1		4A	+7.5V
-7.5V_1		5A	-7.5V
TC_IN_H	P41-6	6A	TC_IN_H
TC_OUT_C	P41-9	7A	TC_OUT_C
RECEIVE_A_IO	P39-2A	8A	RECEIVE_A_IO
TRANSMIT_B_IO	P39-1B	9A	TRANSMIT_B_IO
		10A	(TRANSMIT_A_OUT)
FEND_SYS	P7-22A	11A	FEND_SYS
HP_VR	P44-5	12A	HP_VR
		13A	(SYS_SC_PHASE)
		14A	(RET_GND)
		15A	
DSR	P39-6A	16A	DSR
TXD	P39-5B	17A	TXD
RF_CLK	P17-26A, P27-16B	18A	RF_CLK
EQ_LD_H	P17-26C	19A	EQ_LD_H
DEC_DATA	P14-22C	20A	DEC_DATA
RF_DVCPRO_H	P27-3A	21A	RF_DVCPRO_H
AV_CS_APROC_L	P11-22B	22A	AV_CS_APROC_L
AV_ADRS9	P5, P7, P9, P11, P13, P18, P19, P20, P21	23A	AV_ADRS9
AV_ADRS6	P5, P7, P9, P11, P13, P18, P20, P21	24A	AV_ADRS6
AV_ADRS3	P5, P7, P9, P11, P13, P18, P20, P21	25A	AV_ADRS3
AV_ADRS0	P5, P7, P9, P11, P13, P18, P19, P20, P21	26A	AV_ADRS0
AV_RST_L	P5, P7, P9, P11, P13, P18, P19, P20, P21	27A	AV_RST_L
AV_DATA5	P5, P7, P9, P11, P13, P18, P19, P20, P21	28A	AV_DATA5
AV_DATA2	P5, P7, P9, P11, P13, P18, P19, P20, P21	29A	AV_DATA2
+5V_1		30A	+5V
-5V		31A	-5V
GND		32A	GND

P03 VJS3510 (B)

Signal	Connection	Pin	Name
GND		1B	GND
+12V_1		2B	+12V
-12V_1		3B	-12V
+7.5V_1		4B	+7.5V
-7.5V_1		5B	-7.5V
TC_IN_C	P41-5	6B	TC_IN_C
FAN_PULSE1_RET	P45-6	7B	FAN_PULSE1_RET
RECEIVE_B_IO	P39-2B	8B	RECEIVE_B_IO
		9B	
		10B	
		11B	(VIDEO_GAIN)
MIC_VR	P47-3	12B	MIC_VR
		13B	(SYS_SC_COARSE1)
		14B	
		15B	
DTR	P39-6B	16B	DTR
CAST_DOWN1_L	P28-2A	17B	CAST_DOWN1_L
RF_DATA	P17-26B, P27-2A	18B	RF_DATA
		19B	(AV_CS_EXT_L)
WFM_TC	P9-18A	20B	WFM_TC
AV_CS_VIDEO_L	P5-27A, P9-22B, P13-22B	21B	AV_CS_VIDEO_L
AV_CS_AUDIO_L	P15-22B, P17-22B	22B	AV_CS_AUDIO_L
AV_ADRS8	P5, P7, P9, P11, P13, P18, P19, P20, P21	23B	AV_ADRS8
AV_ADRS5	P5, P7, P9, P11, P13, P18, P20, P21	24B	AV_ADRS5
AV_ADRS2	P5, P7, P9, P11, P13, P18, P20, P21	25B	AV_ADRS2
AV_IORD_L	P5, P7, P9, P11, P13, P18, P19, P20, P21	26B	AV_IORD_L
AV_DATA7	P5, P7, P9, P11, P13, P18, P19, P20, P21	27B	AV_DATA7
AV_DATA4	P5, P7, P9, P11, P13, P18, P19, P20, P21	28B	AV_DATA4
AV_DATA1	P5, P7, P9, P11, P13, P18, P19, P20, P21	29B	AV_DATA1
+5V_1		30B	+5V
-5V		31B	-5V
GND		32B	GND

P03 VJS3510 (C)

Signal	Connection	Pin	Name
GND		1C	GND
+12V_1		2C	+12V
-12V_1		3C	-12V
+7.5V_1		4C	+7.5V
-7.5V_1		5C	-7.5V
TC_OUT_H	P41-10	6C	TC_OUT_H
FAN_PULSE2_RET	P45-7	7C	FAN_PULSE2_RET
TRANSMIT_A_IO	P39-1A	8C	TRANSMIT_A_IO
		9C	(RECEIVE_B_OUT)
SYS_RF_RESERVE	P15-14C, P16-14C, P17-15C	10C	RF_EJECT_L
		11C	(SET_UP)
		12C	(SYS_H_PHASE)
		13C	(P_SERIAL_OUT)
		14C	(P_SERIAL_OUT)
FOT_INPUT	P28-12B	15C	FOT_IMPUT
RXD	P39-5A	16C	RXD
THIN_TAPE_L	P28-2B	17C	THIN_TAPE_L
REC_LD_H	P27-3B	18C	REC_LD_H
CL_JP1	P5-18A	19C	CL_JP1
LTC_CLK	P9-19A	20C	LTC_CLK
AV_CS_RECPB_L	P7-21C	21C	AV_CS_RECPB_L
AV_ADRS10	P5, P7, P7, P11, P13, P18, P19, P20, P21	22C	AV_ADRS10
AV_ADRS7	P5, P7, P9, P11, P13, P18, P20, P21	23C	AV_ADRS7
AV_ADRS4	P5, P7, P9, P11, P13, P18, P20, P21	24C	AV_ADRS4
AV_ADRS1	P5, P7, P9, P11, P13, P18, P19, P20, P21	25C	AV_ADRS1
AV_IOWR_L	P5, P7, P9, P11, P13, P18, P19, P20, P21	26C	AV_IOWR_L
AV_DATA6	P5, P7, P9, P11, P13, P18, P19, P20, P21	27C	AV_DATA6
AV_DATA3	P5, P7, P9, P11, P13, P18, P19, P20, P21	28C	AV_DATA3
AV_DATA0	P5, P7, P9, P11, P13, P18, P19, P20, P21	29C	AV_DATA0
+5V_1		30C	+5V
-5V		31C	-5V
GND		32C	GND

P03 VJS3510 (D)

Signal	Connection	Pin	Name
GND		1D	GND
+12V_1		2D	+12V
-12V_1		3D	-12V
+7.5V_1		4D	+7.5V
-7.5V_1		5D	-7.5V
SV_FLASH_TXD	P1-20A	6D	SV_FLASH_TXD
SV_FLASH_RXD	P1-20B	7D	SV_FLASH_RXD
SV_FLASH_SW	P1-20C	8D	SV_FLASH_SW
DV_FLASH_RXD	P7-21B	9D	DV_FLASH_RXD
DV_FLASH_TXD	P7-22B	10D	DV_FLASH_TXD
DV_FLASH_SW1	P7-21D	11D	DV_FLASH_SW1
DV_FLASH_SW2	P7-22D	12D	DV_FLASH_SW2
DV_FLASH_SW3	P7-23D	13D	DV_FLASH_SW3
EJECT_LED	P33-11	14D	EJECT_LED
RESERVE_LED	P33-9	15D	RESERVE_LED
EQ_SCLK	P15-16B, 16-16B	16D	EQ_SCLK
EQ_SDE	P15-16C, 16-16C	17D	EQ_SDE
EQ_SDATA	P15-17B, 16-17B	18D	EQ_SDATA
EQ_SCE_L	P15-16A	19D	EQ_SCE_L
EQ_SCE_R	P16-16A	20D	EQ_SCE_R
		21D	EQ_SCE_RSV
		22D	(MIC_SW)
		23D	
		24D	
		25D	
VTR_LED	P33-8	26D	VTR_LED
AUTO_OFF_LED	P33-7	27D	AUTO_OFF_LED
DIF_AV_INT_L	P5-23A	28D	DIF_AV_INT_L
DIF_BUSY_L	P5-23B	29D	DIF_BUSY_L
+5V_1		30D	+5V
-5V		31D	-5V
GND		32D	GND

P04 VJS3510 (A)

Signal	Connection	Pin	Name
GND		1A	GND
SYS_FRP	P7-24D	2A	SYS_FRP
SYS_AB0	P1-21B	3A	SYS_AB0
SYS_AB3	P1-22B	4A	SYS_AB3
SYS_AB6	P1-23B	5A	SYS_AB6
SYS_AB9	P1-24B	6A	SYS_AB9
SYS_DB1	P1-25B	7A	SYS_DB1
SYS_DB4	P1-26B	8A	SYS_DB4
SYS_DB7	P1-27B	9A	SYS_DB7
SYS_WR_L	P1-28B	10A	SYS_WR_L
SERVO_RESET_L	P1-29B	11A	SERVO_RESET_L
SYS_REV_H	P1-17B	12A	SYS_REV_H
DV_BUSY_L	P7-25D	13A	DV_BUSY_L
ENC_DATA	P5-17B, P9-22A	14A	ENC_DATA
		15A	(A_IN_SEL_SW_L)
OSD_CLK	P5-10B	16A	OSD_CLK
SERVO_LOCK_L	P2-21A	17A	SERVO_LOCK_L
CASSET_INL_H	P28-4B	18A	CASSET_INL_H
CASSET2_H	P28-6A	19A	CASSET2_H
CASSET_UP_L	P28-7B, P33-2	20A	CASSET_UP_L
MECHA_POS1_L	P28-8B	21A	MECHA_POS1_L
MECHA_POS3_L	P28-9B	22A	MECHA_POS3_L
MECHA_POS4_L	P28-10B	23A	MECHA_POS4_L
REEL_POS1_H	P28-11B	24A	REEL_POS1_H
TAPE_START_L	P28-13A	25A	TAPE_START_L
TAPE_END_L	P28-13B	26A	TAPE_END_L
R_STAND_L2S	P29-11	27A	R_STAND_L2S
R_STAND_S2L	P29-10	28A	R_STAND_S2L
		29A	
+3V		30A	+3V
		31A	(+16V)
GND		32A	GND

P04 VJS3510 (B)

Signal	Connection	Pin	Name
GND		1B	GND
SLOW_H	P1-12B, P7-7C	2B	SLOW_H
SYS_AB1	P1-21C	3B	SYS_AB1
SYS_AB4	P1-22C	4B	SYS_AB4
SYS_AB7	P1-23C	5B	SYS_AB7
SYS_AB10	P1-24C	6B	SYS_AB10
SYS_DB2	P1-25C	7B	SYS_DB2
SYS_DB5	P1-26C	8B	SYS_DB5
SERVO_CS_L	P1-27C	9B	SERVO_CS_L
SYS_BUSY_L	P1-28C	10B	SYS_BUSY_L
SYS_SERVO_INT_L	P1-29C	11B	SYS_SERVO_INT_L
FR_PULSE	P1-21A	12B	FR_PULSE
DV_AV_INT_L	P7-26D	13B	DV_AV_INT_L
CASSET_MID_H	P28-3A	14B	CASSET_MID_H
		15B	(V_IN_SEL_SW_L)
OSD_DATA	P5-10C	16B	OSD_DATA
COMP_SYNC_L	P10-19C	17B	COMP_SYNC_L
CASSET1_H	P28-5A	18B	CASSET1_H
CASSET_DOWN_H	P28-7A	19B	CASSET_DOWN_H
MECHA_POS2_L	P28-8A	20B	MECHA_POS2_L
SAFETY_TAB	P28-9A	21B	SAFETY_TAB
REEL_POS2_H	P28-10A	22B	REEL_POS2_H
TAPE_SENSOR_ON	P28-11A	23B	TAPE_SENSOR_ON
F_LOAD_IN	P30-4	24B	F_LOAD_IN
F_LOAD_OUT	P30-5	25B	F_LOAD_OUT
LOADING	P29-6	26B	LOADING
UNLOADING	P29-7	27B	UNLOADING
FR_SERI0A	P32-5	28B	FR_SERI0A
FR_SERI1A	P32-7	29B	FR_SERI1A
+3V		30B	+3V
		31B	(+16V)
GND		32B	GND

P04 VJS3510 (C)

Signal	Connection	Pin	Name
GND		1C	GND
TAPE_REV_H	P2-2A, P7-10A	2C	TAPE_REV_H
SYS_AB2	P1-22A	3C	SYS_AB2
SYS_AB5	P1-23A	4C	SYS_AB5
SYS_AB8	P1-24A	5C	SYS_AB8
SYS_DB0	P1-25A	6C	SYS_DB0
SYS_DB3	P1-26A	7C	SYS_DB3
SYS_DB6	P1-27A	8C	SYS_DB6
SYS_RD_L	P1-28A	9C	SYS_RD_L
SERVO_INT_L	P1-29A	10C	SERVO_INT_L
RECI	P15-13C, P16-13C, P27-4B	11C	RECI
AV_CS_SDI_L	P5-24A	12C	AV_CS_SDI_L
I2CLK	P5-17A, P9-21C	13C	I2CLK
OUT_FRM	P10-20A	14C	OUT_FRM
EJECT_SW_L	P33-10	15C	EJECT_SW_L
OSD_STB	P5-10A	16C	OSD_STB
CASSET_INR_H	P28-4A	17C	CASSET_INR_H
DEW_ON_H	P28-5B	18C	DEW_ON_H
DEW_GND	P28-6B	19C	DEW_GND
		20C	
		21C	
		22C	
		23C	
		24C	
CH_COND3_LED	P33-5	25C	CH_COND3_LED
CH_COND2_LED	P33-4	26C	CH_COND2_LED
CH_COND1_LED	P33-3	27C	CH_COND1_LED
FR_SERI0B	P32-6	28C	FR_SERI0B
FR_SERI1B	P32-8	29C	FR_SERI1B
+3V		30C	+3V
		31C	(+16V)
GND		32C	GND

P04 VJS3510 (D)

Signal	Connection	Pin	Name
GND		1D	GND
		2D	(FLS_RESET)
		3D	(FLS_BUSY)
		4D	(FLS_TXD)
		5D	(FLS_RXD)
		6D	(FLS_CLK)
		7D	(FLS_MOD1)
		8D	(FLS_MOD0)
		9D	(FLS_19200)
		10D	(FLS_FP)
WARNING_LED	P33-6	11D	WARNING_LED
SLW_CTL2	P5-19A, P7-27D, P10-29C	12D	SLW_CTL2
SLW_CTL1	P5-19B, P7-28D, P10-29B	13D	SLW_CTL1
SLW_CTL0	P5-19C, P7-29D, P10-29A	14D	SLW_CTL0
MIF_RESERVE2	P28-12A	15D	MIF_RESERVE2
MIF_RESERVE1	P28-14A	16D	MIF_RESERVE1
LP_MODE_L	P28-1B	17D	LP_MODE_L
CAST_DOWN2_L	P28-1A	18D	CAST_DOWN2_L
LOAD_ERR_SYS	P2-21B	19D	LOAD_ERR_SYS
PINCH_ON	P31-6	20D	PINCH_ON
PINCH_OFF	P31-5	21D	PINCH_OFF
S_BRAKE_ON	P29-9	22D	S_BRAKE_ON
S_BRAKE_OFF	P29-8	23D	S_BRAKE_OFF
T_BRAKE_ON	P31-2	24D	T_BRAKE_ON
T_BRAKE_OFF	P31-1	25D	T_BRAKE_OFF
M_STOPPER_OFF	P31-3	26D	M_STOPPER_OFF
M_STOPPER_ON	P31-4	27D	M_STOPPER_ON
CLEANING_OFF	P29-12	28D	CLEANING_OFF
CLEANING_ON	P29-13	29D	CLEANING_ON
+3V		30D	+3V
		31D	(+16V)
GND		32D	GND

COMPONENT NAME	VTR_MOTHER (F2)	02/13
CIRCUIT BOARD NO.	DRAWING NO.	
VEP80B76	KR0P40 (2/13)	
	SCM191	

F3
SDI

P05
VJS3510

		1A	GND
GND		2A	NC
+12V_1		3A	NC
-12V_1		4A	P7.5V
+7.5V_1		5A	N7.5V
-7.5V_1		6A	PB_SDATA0
		7A	PB_SDATA4
		8A	PB_MDATA0
		9A	PB_MDATA4
OSD_STB	P4-16C	10A	S_STROBE
TBC_RHRST	P5-11C, P7-17B, P14-8A, P14-17C	11A	TBC_RHRST
		12A	A_IN_EE_Y0
		13A	A_IN_EE_Y4
		14A	A_IN_EE_C0
		15A	A_IN_EE_C4
		16A	NC
I2CLK	P4-13C, P9-21C	17A	I2CLK
CL_JP1	P3-19C	18A	CL_JP1
SLW_CTL2	P4-12D, P7-27D, P10-29C	19A	SLW_CTL2
SW_FRM	P8-11C, P11-19C	20A	SW_FRM
EE_THRU_L	P8-2C, P10-22C	21A	EE_THRU_L
CHAR_DATA_H	P8-19C, P10-18B	22A	CHAR_DATA_H
DIF_AV_INT_L	P3-28D	23A	DIF_AV_INT_L
AV_CS_SDI_L	P4-12C	24A	AV_CS_SDI_L
AV_ADRS7	P3-23C	25A	AV_ADRS7
AV_ADRS3	P3-25A	26A	AV_ADRS3
AV_CS_VIDEO_L	P3-21B	27A	AV_CS_VIDEO_L
AV_DATA7	P3-27B	28A	AV_DATA7
AV_DATA3	P3-28C	29A	AV_DATA3
+5V_4		30A	+5V
-5V		31A	-5V
GND		32A	GND

P05
VJS3510

		1B	GND
GND		2B	NC
+12V_1		3B	NC
-12V_1		4B	P7.5V
+7.5V_1		5B	N7.5V
-7.5V_1		6B	PB_SDATA1
		7B	PB_SDATA5
		8B	PB_MDATA1
		9B	PB_MDATA5
OSD_CLK	P4-16A	10B	S_CLK
TBC_RVRST	P5-11D, P7-17A, P14-7C, P14-18C	11B	TBC_RVRST
		12B	A_IN_EE_Y1
		13B	A_IN_EE_Y5
		14B	A_IN_EE_C1
		15B	A_IN_EE_C5
		16B	NC
ENC_DATA	P4-14A, P9-22A	17B	I2DATA
		18B	
SLW_CTL1	P4-13D, P7-28D, P10-29B	19B	SLW_CTL1
		20B	
		21B	
CHAR_GATE_L	P8-19D, P10-18C	22B	CHAR_GATE_L
DIF_BUSY_L	P3-29D	23B	DIF_BUSY_L
AV_ADRS10	P3-22C	24B	AV_ADRS10
AV_ADRS6	P3-24A	25B	AV_ADRS6
AV_ADRS2	P3-25B	26B	AV_ADRS2
AV_IORD_L	P3-26B	27B	AV_IORD_L
AV_DATA6	P3-27C	28B	AV_DATA6
AV_DATA2	P3-29A	29B	AV_DATA2
+5V_4		30B	+5V
-5V		31B	-5V
GND		32B	GND

P05
VJS3510

		1C	GND
GND		2C	NC
+12V_1		3C	NC
-12V_1		4C	P7.5V
+7.5V_1		5C	N7.5V
-7.5V_1		6C	PB_SDATA2
		7C	PB_SDATA6
		8C	PB_MDATA2
		9C	PB_MDATA6
OSD_DATA	P4-16B	10C	S_DATA
TBC_RHRST	P5-11A, P7-17B, P14-8A, P14-17C	11C	TBC_RHRST
		12C	A_IN_EE_Y2
		13C	A_IN_EE_Y6
		14C	A_IN_EE_C2
		15C	A_IN_EE_C6
		16C	NC
		17C	SEAM_MOD0
		18C	
SLW_CTL0	P4-14D, P7-29D, P10-29A	19C	SLW_CTL0
		20C	
EECLK27_P	P10-21C	21C	EE_CLK_P
		22C	NC
		23C	NC
AV_ADRS9	P3-23A	24C	AV_ADRS9
AV_ADRS5	P3-24B	25C	AV_ADRS5
AV_ADRS1	P3-25C	26C	AV_ADRS1
AV_IOWR_L	P3-26C	27C	AV_IOWR_L
AV_DATA5	P3-28A	28C	AV_DATA5
AV_DATA1	P3-29B	29C	AV_DATA1
+5V_4		30C	+5V
-5V		31C	-5V
GND		32C	GND

P05
VJS3510

		1D	GND
GND		2D	NC
+12V_1		3D	NC
-12V_1		4D	P7.5V
+7.5V_1		5D	N7.5V
-7.5V_1		6D	PB_SDATA3
		7D	PB_SDATA7
		8D	PB_MDATA3
		9D	PB_MDATA7
		10D	NC
TBC_RVRST	P5-11B, P7-17A, P14-7C, P14-18C	11D	TBC_RVRST
		12D	A_IN_EE_Y3
		13D	A_IN_EE_Y7
		14D	A_IN_EE_C3
		15D	A_IN_EE_C7
		16D	NC
		17D	SEAM_MOD1
		18D	
SW_HD	P7-20D	19D	SW_HD
		20D	NC
EECLK27_N	P10-22A	21D	EE_CLK_N
EE_FRM	P9-21B	22D	EE_FRM
		23D	NC
AV_ADRS8	P3-23B	24D	AV_ADRS8
AV_ADRS4	P3-24C	25D	AV_ADRS4
AV_ADRS0	P3-26A	26D	AV_ADRS0
AV_RST_L	P3-27A	27D	AV_RST_L
AV_DATA4	P3-28B	28D	AV_DATA4
AV_DATA0	P3-29C	29D	AV_DATA0
+5V_4		30D	+5V
-5V		31D	-5V
GND		32D	GND

P06
VJS3510

		1A	GND
GND		2A	SDI_MOUT0
SDI_MOUT0	P10-2A	3A	SDI_MOUT4
SDI_MOUT4	P8-3C, P10-3B	4A	SDI_MOUT8
SDI_MOUT8	P8-4C, P10-4C	5A	SDI_SOUT2
		6A	SDI_SOUT6
SDI_27MP	P8-5A, P10-9A	7A	SDI_27P
SDI_HD	P8-8B, P10-16A	8A	SDI_HD
DINCOM_H	P7-18A	9A	DINCOM_H
		10A	REC_C_DATA7
		11A	REC_C_DATA3
		12A	REC_Y_DATA7
		13A	REC_Y_DATA3
		14A	VIN_HST_N
		15A	NC
		16A	(DIF_BUS_P0)
		17A	(DIF_BUS_P4)
		18A	(DIF_BUS_R0)
		19A	(DIF_BUS_R4)
		20A	(DIF_SSP_R)
		21A	VBLK_SL_CSYNC
		22A	REC_SDATA0
		23A	REC_SDATA4
REC_MDATA0	P7-19A	24A	REC_MDATA0
REC_MDATA4	P7-20A	25A	REC_MDATA4
S_REC_AUD12	P12-9C	26A	S_REC_AUD12
S_PB_AUD12	P8-11A, P12-11A	27A	S_PB_AUD12
DAUDCK_P	P12-12B	28A	DAUDCK_P
SDI_CS	P10-24B	29A	SDI_CS
+3V		30A	+3V
		31A	(+16V)
GND		32A	GND

P06
VJS3510

		1B	GND
GND		2B	SDI_MOUT1
SDI_MOUT1	P10-2B	3B	SDI_MOUT5
SDI_MOUT5	P8-3D, P10-3C	4B	SDI_MOUT9
SDI_MOUT9	P8-4D, P10-5A	5B	SDI_SOUT3
		6B	SDI_SOUT7
SDI_27MN	P8-5B, P10-9B	7B	SDI_27N
SDI_VD	P8-2A, P10-17A	8B	SDI_VD
DINCOM_FRM	P7-18B	9B	DINCOM_FRM
		10B	REC_C_DATA6
		11B	REC_C_DATA2
		12B	REC_Y_DATA6
		13B	REC_Y_DATA2
		14B	VIN_FRM
		15B	VBLK_CLK
		16B	(DIF_BUS_P1)
		17B	(DIF_BUS_P5)
		18B	(DIF_BUS_R1)
		19B	(DIF_BUS_R5)
		20B	NC
		21B	NC
		22B	REC_SDATA1
		23B	REC_SDATA5
REC_MDATA1	P7-9B	24B	REC_MDATA1
REC_MDATA5	P7-20B	25B	REC_MDATA5
S_REC_AUD12_G	P12-10A	26B	S_REC_AUD12_G
S_PB_AUD12_G	P12-11B	27B	S_PB_AUD12_G
DAUDCK_N	P12-12C	28B	DAUDCK_N
RRST_SDI	P7-21A	29B	RRST_SDI
+3V		30B	+3V
		31B	(+16V)
GND		32B	GND

P06
VJS3510

		1C	GND
GND		2C	SDI_MOUT2
SDI_MOUT2	P8-3A, P10-2C	3C	SDI_MOUT6
SDI_MOUT6	P8-4A, P10-4A	4C	SDI_SOUT0
		5C	SDI_SOUT4
		6C	SDI_SOUT8
SDI_FRM	P8-5C, P10-15C	7C	SDI_FRM
DINCOM_CF0	P7-17C	8C	DINCOM_CF0
		9C	VBLK_SDI
		10C	REC_C_DATA5
		11C	REC_C_DATA1
		12C	REC_Y_DATA5
		13C	REC_Y_DATA1
		14C	VIN_CF0
		15C	(DIF_SSP_P)
		16C	(DIF_BUS_P2)
		17C	(DIF_BUS_P6)
		18C	(DIF_BUS_R2)
		19C	(DIF_BUS_R6)
		20C	VBLK_SL_CLK
		21C	NC
		22C	REC_SDATA2
		23C	REC_SDATA6
REC_MDATA2	P7-19C	24C	REC_MDATA2
REC_MDATA6	P7-20C	25C	REC_MDATA6
S_REC_AUD34	P12-27B	26C	S_REC_AUD34
S_PB_AUD34	P8-11B, P12-11C	27C	S_PB_AUD34
PB_DAUDCK_P	P12-27B	28C	PB_DAUDCK_P
SDI_CLK_P	P7.18C	29C	SDI_CLK_P
+3V		30C	+3V
		31C	(+16V)
GND		32C	GND

P06
VJS3510

		1D	GND
GND		2D	SDI_MOUT3
SDI_MOUT3	P8-3B, P10-3A	3D	SDI_MOUT7
SDI_MOUT7	P8-4B, P10-4B	4D	SDI_SOUT1
		5D	SDI_SOUT5
		6D	SDI_SOUT9
SDI_CF	P8-2B, P10-16B	7D	SDI_CF
DINCOM_CF1	P7-16D	8D	DINCOM_CF1
		9D	VBLK_CS
		10D	REC_C_DATA4
		11D	REC_C_DATA0
		12D	REC_Y_DATA4
		13D	REC_Y_DATA0
		14D	VIN_CF1
		15D	
		16D	(DIF_BUS_P3)
		17D	(DIF_BUS_P7)
		18D	(DIF_BUS_R3)
		19D	(DIF_BUS_R7)
		20D	VBLK_SL_DATA
		21D	NC
		22D	REC_SDATA3
		23D	REC_SDATA7
REC_MDATA3	P7-18D	24D	REC_MDATA3
REC_MDATA7	P7-19D	25D	REC_MDATA7
S_REC_AUD34_G	P12-10C	26D	S_REC_AUD34_G
S_PB_AUD34_G	P12-12A	27D	S_PB_AUD34G
PB_DAUDCK_N	P12-27C	28D	PB_DAUDCK_N
SDI_CLK_N	P7-17D	29D	SDI_CLK_N
+3V		30D	+3V
		31D	(+16V)
GND		32D	GND

COMPONENT NAME	VTR_MOTHER (F3)	03/13
CIRCUIT BOARD NO.		DRAWING NO.
VEP80B76		KR0P40 (3/13)
		SCM192

F4
REC_PB

P07
VJS3510

GND		1A	GND
+12V_1		2A	+12V
-12V_1		3A	-12V
+7.5V_1		4A	+7R5V
-7.5V_1		5A	(-7.5V)
DRATE0_AV	P1-15C, P18-19B	6A	DRATE0_AV
FP_S0	P1-11A	7A	FP_S0
TRP2	P1-14A	8A	TRP2
SERVO_LOCK_H	P1-19B	9A	SERVO_LOCK_H
TAPE_REV_H	P2-2A, P4-2C	10A	TAPE_REV_H
REC_CDATA6	P14-10B	11A	REC_CDATA6
REC_CDATA2	P14-11C	12A	REC_CDATA2
REC_YDATA6	P14-13A	13A	REC_YDATA6
REC_YDATA2	P14-14B	14A	REC_YDATA2
VBLK_BW1	P14-19B	15A	VBLK_BW1
AINCOM_FRM	P14-8B	16A	AINCOM_FRM
TBC_RVRST	P5-11B, P5, 11D, P14-7C, P14-18C	17A	TBC_RVRST
DINCOM_H	P6-9A	18A	DINCOM_H
REC_MDAT0	P6-24A	19A	REC_MDAT0
REC_MDAT4	P6-25A	20A	REC_MDAT4
RRST_SDI	P6-29B	21A	RRST_SDI
FEND_SYS	P3-11A	22A	FEND_SYS
AV_ADRS9	P3-23A	23A	AV_ADRS9
AV_ADRS6	P3-24A	24A	AV_ADRS6
AV_ADRS3	P3-25A	25A	AV_ADRS3
AV_ADRS0	P3-26A	26A	AV_ADRS0
AV_RST_L	P3-27A	27A	AV_RST_L
AV_DATA5	P3-28A	28A	AV_DATA5
AV_DATA2	P3-29A	29A	AV_DATA2
+5V_2		30A	+5V
-5V		31A	-5V
RXD_GND		32A	GND

P07
VJS3510

GND		1B	GND
+12V_1		2B	+12V
-12V_1		3B	-12V
+7.5V_1		4B	+7R5V
-7.5V_1		5B	(-7.5V)
DRATE1	P1-6B, P15-13B, P16-13B, P17-13B, P27-10A	6B	DRATE1
FP_S1	P1-11B	7B	FP_S1
CUEREV_H	P1-13A	8B	CUEREV_H
TRP3	P1-14B	9B	TRP3
SV_MODE0	P2-6B	10B	(SV_MODE0)
REC_CDATA5	P14-10C	11B	REC_CDATA5
REC_CDATA1	P14-12A	12B	REC_CDATA1
REC_YDATA5	P14-13B	13B	REC_YDATA5
REC_YDATA1	P14-14C	14B	REC_YDATA1
VBLK_BW2	P14-15C	15B	VBLK_BW2
AINCOM_CF1	P14-9A	16B	AINCOM_CF1
TBC_RHRST	P5-11A, P5-11C, P14-8A, P14-17C	17B	TBC_RHRST
DINCOM_FRM	P6-9B	18B	DINCOM_FRM
REC_MDATA1	P6-24B	19B	REC_MDATA1
REC_MDATA5	P6-25B	20B	REC_MDATA5
DV_FLASH_RXD	P3-9D	21B	DV_FLASH_RXD
DV_FLASH_TXD	P3-10D	22B	DV_FLASH_TXD
AV_ADRS8	P3-23B	23B	AV_ADRS8
AV_ADRS5	P3-24B	24B	AV_ADRS5
AV_ADRS2	P3-25B	25B	AV_ADRS2
AV_IORD_L	P3-26B	26B	AV_IORD_L
AV_DATA7	P3-27B	27B	AV_DATA7
AV_DATA4	P3-28B	28B	AV_DATA4
AV_DATA1	P3-29B	29B	AV_DATA1
+5V_2		30B	+5V
-5V		31B	-5V
GND		32B	GND

P07
VJS3510

GND		1C	GND
+12V_1		2C	+12V
-12V_1		3C	-12V
+7.5V_1		4C	+7R5V
-7.5V_1		5C	(-7.5V)
FEND	P1-10C	6C	FEND
SLOW_H	P1-12B	7C	SLOW_H
TRP0	P1-13B	8C	TRP0
TSR	P1-14C	9C	TSR
SV_MODE1	P2&C	10C	(SV_MODE1)
REC_CDATA4	P14-11A	11C	REC_CDATA4
REC_CDATA0	P14-12B	12C	REC_CDATA0
REC_YDATA4	P14-13C	13C	REC_YDATA4
REC_YDATA0	P14-15A	14C	REC_YDATA0
TBC_RCK_P	P14-7A	15C	TBC_RCK_P
AINCOM_CF0	P14-8C	16C	AINCOM_CF0
DINCOM_CF0	P6-8C	17C	DINCOM_CF0
SDI_CLK_P	P6-29C	18C	SDI_CLK_P
REC_MDATA2	P6-24C	19C	REC_MDATA2
REC_MDATA6	P6-25C	20C	REC_MDATA6
AV_CS_RECPB_L	P3-21C	21C	AV_CS_RECPB_L
AV_ADRS10	P3-22C	22C	AV_ADRS10
AV_ADRS7	P3-23C	23C	AV_ADRS7
AV_ADRS4	P3-24C	24C	AV_ADRS4
AV_ADRS1	P3-25C	25C	AV_ADRS1
AV_IOWR_L	P3-26C	26C	AV_IOWR_L
AV_DATA6	P3-27C	27C	AV_DATA6
AV_DATA3	P3-28C	28C	AV_DATA3
AV_DATA0	P3-29C	29C	AV_DATA0
+5V_2		30C	+5V
-5V		31C	-5V
GND		32C	GND

P07
VJS3510

GND		1D	GND
+12V_1		2D	+12V
-12V_1		3D	-12V
+7.5V_1		4D	+7R5V
-7.5V_1		5D	(-7.5V)
FLUSH	P1-10B	6D	FLUSH
REC_HEAD_L	P1-11C	7D	REC_HEAD_L
TRP1	P1-13C	8D	TRP1
SV_DV_TXD	P1-15A	9D	SV_DV_TXD
REC_CDATA7	P14-10A	10D	REC_CDATA7
REC_CDATA3	P14-11B	11D	REC_CDATA3
REC_YDATA7	P14-12C	12D	REC_YDATA7
REC_YDATA3	P14-14A	13D	REC_YDATA3
TBC_RCK_N	P14-7B	14D	TBC_RCK_N
AINCOM_HST_N	P14-16D	15D	AINCOM_HST_N
DINCOM_CF1	P6-8D	16D	DINCOM_CF1
SDI_CLK_N	P6-29D	17D	SDI_CLK_N
REC_MDATA3	P6-24D	18D	REC_MDATA3
REC_MDATA7	P6-25D	19D	REC_MDATA7
SW_HD	P5-19D	20D	SW_HD
DV_FLASH_SW1	P3-11D	21D	DV_FLASH_SW1
DV_FLASH_SW2	P3-12D	22D	DV_FLASH_SW2
DV_FLASH_SW3	P3-13D	23D	DV_FLASH_SW3
SYS_FRP	P4-2A	24D	SYS_FRP
DV_BUSY_L	P4-13A	25D	DV_BUSY_L
DV_AV_INT_L	P4-13B	26D	DV_AV_INT_L
SLW_CTL2	P4-12D	27D	SLW_CTL2(REV_H)
SLW_CTL1	P4-13D	28D	SLW_CTL1(FS)
SLW_CTL0	P4-14D	29D	SLW_CTL0(FF)
+5V_2		30D	+5V
-5V		31D	-5V
GND		32D	GND

P08
VJS3510

GND		1A	GND
SDI_VD	P6-8B, P10-17A	2A	SDI_VD
SDI_MOUT2	P6-2C, P10-2C	3A	SDI_MOUT2
SDI_MOUT6	P6-3C, P10-4A	4A	SDI_MOUT2
SDI_27MP	P6-7A, P10-9A	5A	SDI_27MP
PB_MDATA0	P10-12C	6A	PB_MDATA0
PB_MDATA4	P10-14A	7A	PB_MDATA4
INCOM_CF0	P10-25A	8A	INCOM_CF0
REF_FRM	P10-27A	9A	REF_FRM
DIR_REV_H	P12-5B	10A	DIR_REV_H
S_PB_AUD12	P6-27A, P12-11A	11A	S_PB_AUD12
PB_FRM_A1	P12-19C	12A	PB_FRM_A1
AUD_CLK18_P	P12-8A	13A	AUD_CLK18_P
FS256_PB_P	P12-23C	14A	FS256_PB_P
PB_DATA12	P12-19A	15A	PB_DATA12
FS64	P12-17C	16A	FS64
REC_DATA12	P12-15B	17A	REC_DATA12
PB_FRM_A3	P12-23A	18A	PB_FRM_A3
OSD_CLK	P4-16A, P5-10B	19A	S_CLK
REC_L_DAT_P	P24-1	20A	REC_L_DAT_P
REC_R_DAT_P	P24-4	21A	REC_R_DAT_P
FE_L1_CTRL	P27-14B	22A	FE_L1_CTRL
FE_R1_CTRL	P27-14A	23A	FE_R1_CTRL
PB_L_HSW	P1-17C, P15-20B, P17-19B, P27-6B	24A	PB_L_HSW
PB_L_DAT_P	P15-9A	25A	PB_L_DAT_P
PB_R_DAT_P	P16-9A	26A	PB_R_DAT_P
EQ_CLK_P	P15-14A, P16-14A	27A	EQ_CLK_P
RP_L_DAT_P	P15-7A	28A	RP_L_DAT_P
RP_R_DAT_P	P16-7A	29A	RP_R_DAT_P
+3V		30A	+3V
		31A	(NC)
GND		32A	GND

P08
VJS3510

GND		1B	GND
SDI_CF	P6-7D, P10-16B	2B	SDI_CF
SDI_MOUT3	P6-2D, P10-3A	3B	SDI_MOUT3
SDI_MOUT7	P6-3D, P10-4B	4B	SDI_MOUT7
SDI_27MN	P6-7B, P10-9B	5B	SDI_27MN
PB_MDATA1	P10-13A	6B	PB_MDATA1
PB_MDATA5	P10-14B	7B	PB_MDATA5
SDI_HD	P6-8A, P10-16A	8B	SDI_HD
INCOM_CF1	P10-25B	9B	INCOM_CF1
REF_HD	P10-28A	10B	REF_HD
S_PB_AUD34	P6-27C, P12-11C	11B	S_PB_AUD34
PB_FRM_A2	P12-21B	12B	PB_FRM_A2
AUD_CLK18_N	P12-6B	13B	AUD_CLK18_N
FS256_PB_N	P12-24C	14B	FS256_PB_N
PB_DATA34	P12-19B	15B	PB_DATA34
FS_REC	P12-16C	16B	FS_REC
REC_DATA34	P12-15C	17B	REC_DATA34
PB_FRM_A4	P12-23B	18B	PB_FRM_A4
OSD_DATA	P4-16B, P5-10C	19B	S_DATA
REC_L_DAT_N	P24-2	20B	REC_L_DAT_N
REC_R_DAT_N	P24-5	21B	REC_R_DAT_N
FE_L2_CTRL	P27-15B	22B	FE_L2_CTRL
FE_R2_CTRL	P27-15A	23B	FE_R2_CTRL
PB_R_HSW	P1-18B, P16-20B, P17-20A, P27-6A	24B	PB_R_HSW
PB_L_DAT_N	P15-9B	25B	PB_L_DAT_N
PB_R_DAT_N	P16-9B	26B	PB_R_DAT_N
EQ_CLK_N	P15-14B, P16-14B	27B	EQ_CLK_N
RP_L_DAT_N	P15-7B	28B	RP_L_DAT_N
RP_R_DAT_N	P16-7B	29B	RP_R_DAT_N
+3V		30B	+3V
		31B	(NC)
GND		32B	GND

P08
VJS3510

GND		1C	GND
EE_THRU_L	P5-21A, P10-22C	2C	EE_THRU_L
SDI_MOUT4	P6-3A, P10-3B	3C	SDI_MOUT4
SDI_MOUT8	P6-4A, P10-4C	4C	SDI_MOUT8
SDI_FRM	P6-7C, P10-15C	5C	SDI_FRM
PB_MDATA2	P10-13B	6C	PB_MDATA2
PB_MDATA6	P10-14C	7C	PB_MDATA6
INCOM_FRM	P10-24C	8C	INCOM_FRM
REF_CF0	P10-27B	9C	REF_CF0
CLK27_VOUT_P	P10-28B	10C	CLK27_VOUT_P
SW_FRM	P5-20A, P11-19C	11C	SW_FRM
AUD_FEND	P12-20B	12C	AUD_FEND
REC_FRM_AUD	P12-15A	13C	REC_FRM_AUD
FS64_PB1	P12-17A	14C	FS64_PB1
FS_PB1	P12-18C	15C	FS_PB1
FS256_P	P12-16B	16C	FS256_P
REC_AUD12	P12-4A	17C	REC_AUD12
REC_AUD12_G	P12-1A	18C	REC_AUD12_G
OSD_STB	P4-16C, P5-10A	19C	S_STROBE
FEND2	P1-12A	20C	FEND2
REC_CLK_P	P24-7	21C	REC_CLK_P
REC_L1_CTRL	P27-12B	22C	REC_L1_CTRL
REC_R1_CTRL	P27-12A	23C	REC_R1_CTRL
RP_L_HSW_EQ	P15-19B, P17-19C, P27-7B	24C	RP_L_HSW_EQ
PB_L_CLK_P	P15-10A	25C	PB_L_CLK_P
PB_R_CLK_P	P16-10A	26C	PB_R_CLK_P
		27C	(NC)
RP_L_CLK_P	P15-8A	28C	RP_L_CLK_P
RP_R_CLK_P	P16-8A	29C	RP_R_CLK_P
+3V		30C	+3V
		31C	(NC)
GND		32C	GND

P08
VJS3510

GND		1D	GND
PB_FRM2	P10-20C	2D	PB_FRM2
SDI_MOUT5	P6-3B, P10-3C	3D	SDI_MOUT5
SDI_MOUT9	P6-4B, P10-5A	4D	SDI_MOUT9
PB_FRM	P10-26C	5D	PB_FRM
PB_MDATA3	P10-13C	6D	PB_MDATA3
PB_MDATA7	P10-15A	7D	PB_MDATA7
INCOM_H	P10-25C, P12-13A	8D	INCOM_H
REF_CF1	P8-9D, P10-27C	9D	REF_CF1
CLK27_VOUT_N	P10-28C	10D	CLK27_VOUT_N
PB_FRM_18	P11-22A	11D	PB_FRM_18
FRM5	P12-20A	12D	FRM5
INH_A	P12-18B	13D	INH_A
FS64_PB2	P12-21A	14D	FS64_PB2
FS_PB2	P12-20C	15D	FS_PB2
FS256_N	P12-16A	16D	FS256_N
REC_AUD34	P12-4B	17D	REC_AUD34
REC_AUD34_G	P12-1B	18D	REC_AUD34_G
CHAR_DATA_H	P5-22A, P10-18B	19D	CHAR_DATA_H
SPA	P1-12C	20D	SPA
REC_CLK_N	P24-8	21D	REC_CLK_N
REC_L2_CTRL	P27-13B	22D	REC_L2_CTRL
REC_R2_CTRL	P27-13A	23D	REC_R2_CTRL
RP_R_HSW_EQ	P16-19B, P17-20B, P27-7A	24D	RP_R_HSW_EQ
PB_L_CLK_N	P15-10B	25D	PB_L_CLK_N
PB_R_CLK_N	P16-10B	26D	PB_R_CLK_N
CHAR_GATE_L	P5-22B, P10-18C	27D	CHAR_GATE_L
RP_L_CLK_N	P15-8B	28D	RP_L_CLK_N
RP_R_CLK_N	P16-8B	29D	RP_R_CLK_N
+3V		30D	+3V
		31D	(NC)
GND		32D	GND

COMPONENT NAME	VTR_MOTHER (F4)	04/13
CIRCUIT BOARD NO.		DRAWING NO.
VEP80B76		KR0P40 (4/13)
		SCM193

F5
V_OUT

P09
VJ53814

GND		1A	GND
+12V_1		2A	+12V
-12V_1		3A	-12V
+7.5V_1		4A	+7.5V
-7.5V_1		5A	-7.5V
GND		6A	REF_IN_G
GND		7A	VIDEO_OUT1_G
GND		8A	VIDEO_OUT2_G
GND		9A	VIDEO_OUT3_G
GND		10A	Y_OUT_G
GND		11A	PR_OUT_G
GND		12A	PB_OUT_G
VIDEO_IN	P13-6C, P40-12A	13A	VIDEO_IN
GND		14A	GND
WFM_RF	P15-25A, P15-27A, P16-25A, P16-27A	15A	WFM_RF
GND		16A	GND
		17A	NC
WFM_TC	P3-20B	18A	TIME_CODE
LTC_CLK	P3-20C	19A	LTC_CLK_O
		20A	NOT_CONNECT
		21A	NOT_CONNECT
ENC_DATA	P4-14A, P5-17B	22A	I2DATA
AV_ADRS9	P3-23A	23A	AV_ADRS9
AV_ADRS6	P3-24A	24A	AV_ADRS6
AV_ADRS3	P3-25A	25A	AV_ADRS3
AV_ADRS0	P3-26A	26A	AV_ADRS0
AV_RST_L	P3-27A	27A	AV_RST_L
AV_DATA5	P3-28A	28A	AV_DATA5
AV_DATA2	P3-29A	29A	AV_DATA2
+5V_2		30A	+5V
-5V		31A	-5V
GND		32A	GND

P09
VJ53814

GND		1B	GND
+12V_1		2B	+12V
-12V_1		3B	-12V
+7.5V_1		4B	+7.5V
-7.5V_1		5B	-7.5V
		6B	NOT_CONNECT
		7B	NOT_CONNECT
		8B	NOT_CONNECT
		9B	NOT_CONNECT
		10B	NOT_CONNECT
		11B	NOT_CONNECT
		12B	NOT_CONNECT
GND		13B	GND
		14B	(PB_R_WFM_ENV)
GND		15B	GND
GND		16B	SEAM_MOD1
GND		17B	NC
		18B	GND
		19B	NOT_CONNECT
		20B	NOT_CONNECT
EE_FRM	P5-22D	21B	EE_FRM
AV_CS_VIDEO_L	P3-21B	22B	AV_CS_VIDEO_L
AV_ADRS8	P3-23B	23B	AV_ADRS8
AV_ADRS5	P3-24B	24B	AV_ADRS5
AV_ADRS2	P3-25B	25B	AV_ADRS2
AV_IORD_L	P3-26B	26B	AV_IORD_L
AV_DATA7	P3-27B	27B	AV_DATA7
AV_DATA4	P3-28B	28B	AV_DATA4
AV_DATA1	P3-29B	29B	AV_DATA1
+5V_2		30B	+5V
-5V		31B	-5V
GND		32B	GND

P09
VJ53814

GND		1C	GND
+12V_1		2C	+12V
-12V_1		3C	-12V
+7.5V_1		4C	+7.5V
-7.5V_1		5C	-7.5V
REF_IN	P40-10A	6C	REF_IN
VIDEO_OUT1	P40-2A	7C	VIDEO_OUT1
VIDEO_OUT2	P40-3A	8C	VIDEO_OUT2
VIDEO_OUT3	P40-4A	9C	VIDEO_OUT3
Y_OUT	P40-6A	10C	Y_OUT
PR_OUT	P40-8A	11C	PR_OUT
PB_OUT	P40-7A	12C	PB_OUT
		13C	(PB_R_WFM_RF)
GND		14C	GND
WFM_ENV	P15-25B, P15-27B, P16-25B, P16-27B	15C	WFM_ENV
GND		16C	SEAM_MOD0
		17C	NC
		18C	NOT_CONNECT
		19C	NOT_CONNECT
		20C	NOT_CONNECT
I2CLK	P4-13C, P5-17A	21C	I2CLK
AV_ADRS10	P3-22C	22C	AV_ADRS10
AV_ADRS7	P3-23C	23C	AV_ADRS7
AV_ADRS4	P3-24C	24C	AV_ADRS4
AV_ADRS1	P3-25C	25C	AV_ADRS1
AV_IOWR_L	P3-26C	26C	AV_IOWR_L
AV_DATA6	P3-27C	27C	AV_DATA6
AV_DATA3	P3-28C	28C	AV_DATA3
AV_DATA0	P3-29C	29C	AV_DATA0
+5V_2		30C	+5V
-5V		31C	-5V
GND		32C	GND

P10
VJ53814

GND		1A	GND
SDI_MOUT0	P6-2A	2A	SDI_MOUT0
SDI_MOUT3	P6-2D, P8-3B	3A	SDI_MOUT3
SDI_MOUT6	P6-3C, P8-4A	4A	SDI_MOUT6
SDI_MOUT9	P6-4B, P8-4D	5A	SDI_MOUT9
		6A	SDI_SOUT2
		7A	SDI_SOUT5
		8A	SDI_SOUT8
SDI_27MP	P6-7A, P8-5A	9A	SDI_27MP
		10A	PB_SDATA0
		11A	PB_SDATA3
		12A	PB_SDATA6
PB_MDATA1	P8-6B	13A	PB_MDATA1
PB_MDATA4	P8-7A	14A	PB_MDATA4
PB_MDATA7	P8-7D	15A	PB_MDATA7
SDI_HD	P6-8A, P8-8B	16A	SDI_HD
SDI_VD	P6-8B, P8-2A	17A	NOT_CONNECT
GND		18A	GND
		19A	NC(H_SYNC_L)
OUT_FRM	P4-14C	20A	OUT_FRM
WFM_CTL	P2-7A	21A	CTL
EECLK27_N	P7-21D	22A	EECLK27_N
		23A	NOT_CONNECT
REF_H_A	P12-14C	24A	REF_H_A
INCOM_CF0	P8-8A	25A	INCOME_CF0
GND		26A	GND
REF_FRM	P8-9A	27A	REF_FRM
REF_HD	P8-10B	28A	REF_HD
SLW_CTL0	P4-14D, P5-19C, P7-29D	29A	SLW_CTL0
+3V		30A	+3V
		31A	NOT_CONNECT
GND		32A	GND

P10
VJ53814

GND		1B	GND
SDI_MOUT1	P6-2B	2B	SDI_MOUT1
SDI_MOUT4	P6-3A, P8-3C	3B	SDI_MOUT4
SDI_MOUT7	P6-3D, P8-4B	4B	SDI_MOUT7
		5B	SDI_SOUT0
		6B	SDI_SOUT3
		7B	SDI_SOUT6
		8B	SDI_SOUT9
SDI_27MN	P6-7B, P8-5B	9B	SDI_27MN
		10B	PB_SDATA1
		11B	PB_SDATA4
		12B	PB_SDATA7
PB_MDATA2	P8-6C	13B	PB_MDATA2
PB_MDATA5	P8-7B	14B	PB_MDATA5
GND		15B	GND
SDI_CF	P6-7D, P8-2B	16B	SDI_CF
REF_FRAME	P12-13B	17B	REF_FRAME
CHAR_DATA_H	P5-22A, P8-19C	18B	CHAR_DATA_H
		19B	V_SYNC_L
GND		20B	GND
GND		21B	GND
GND		22B	GND
		23B	
SDI_CS	P6-29A	24B	SDI_CS
INCOM_CF1	P8-9B	25B	INCOME_CF1
		OPEN 26B	DET_420H
REF_CF0	P8-9C	27B	REF_CF0
CLK27_VOUT_P	P8-10C	28B	CLK27_VOUT_P
SLW_CTL1	P6-7C, P8-5C	29B	SLW_CTL1
+3V		30B	+3V
		31B	NOT_CONNECT
GND		32B	GND

P10
VJ53814

GND		1C	GND
SDI_MOUT2	P6-2C, P8-3A	2C	SDI_MOUT2
SDI_MOUT5	P6-3B, P8-3D	3C	SDI_MOUT5
SDI_MOUT8	P6-4A, P8-4C	4C	SDI_MOUT8
		5C	SDI_SOUT1
		6C	SDI_SOUT4
		7C	SDI_SOUT7
GND		8C	GND
GND		9C	GND
		10C	PB_SDATA2
		11C	PB_SDATA5
PB_MDATA0	P8-6A	12C	PB_MDATA0
PB_MDATA3	P8-6D	13C	PB_MDATA3
PB_MDATA6	P8-7C	14C	PB_MDATA6
SDI_FRM	P6-7C, P8-5C	15C	SDI_FRM
GND		16C	GND
REF_HST_N	P12-13C	17C	REF_HST_N
CHAR_GATE_L	P5-22B, P8-19D	18C	CHAR_GATE_L
COMP_SYNC_L	P4-17B	19C	COMP_SYNC_L
PB_FRM2	P8-2D	20C	PB_FRM2
EECLK27_P	P5-21C	21C	EECLK27_P
EE_THRU_L	P5-21A, P8-2C	22C	EE_THRU_L
		23C	
INCOM_FRM	P8-8C	24C	INCOME_FRM
INCOM_H	P8-8D, P12-13A	25C	INCOME_H
PB_FRM	P8-5D	26C	PB_FRM
REF_CF1	P8-9D	27C	REF_CF1
CLK27_VOUT_N	P8-10D	28C	CLK27_VOUT_N
SLW_CTL2	P4-12D, P5-19A, P7-27D	29C	SLW_CTL2
+3V		30C	+3V
		31C	NOT_CONNECT
GND		32C	GND

COMPONENT NAME	VTR_MOTHER (F5)	05/13
CIRCUIT BOARD NO.		DRAWING NO.
VEP80B76		KR0P40 (5/13)
		SCM194

F6
A_PROC

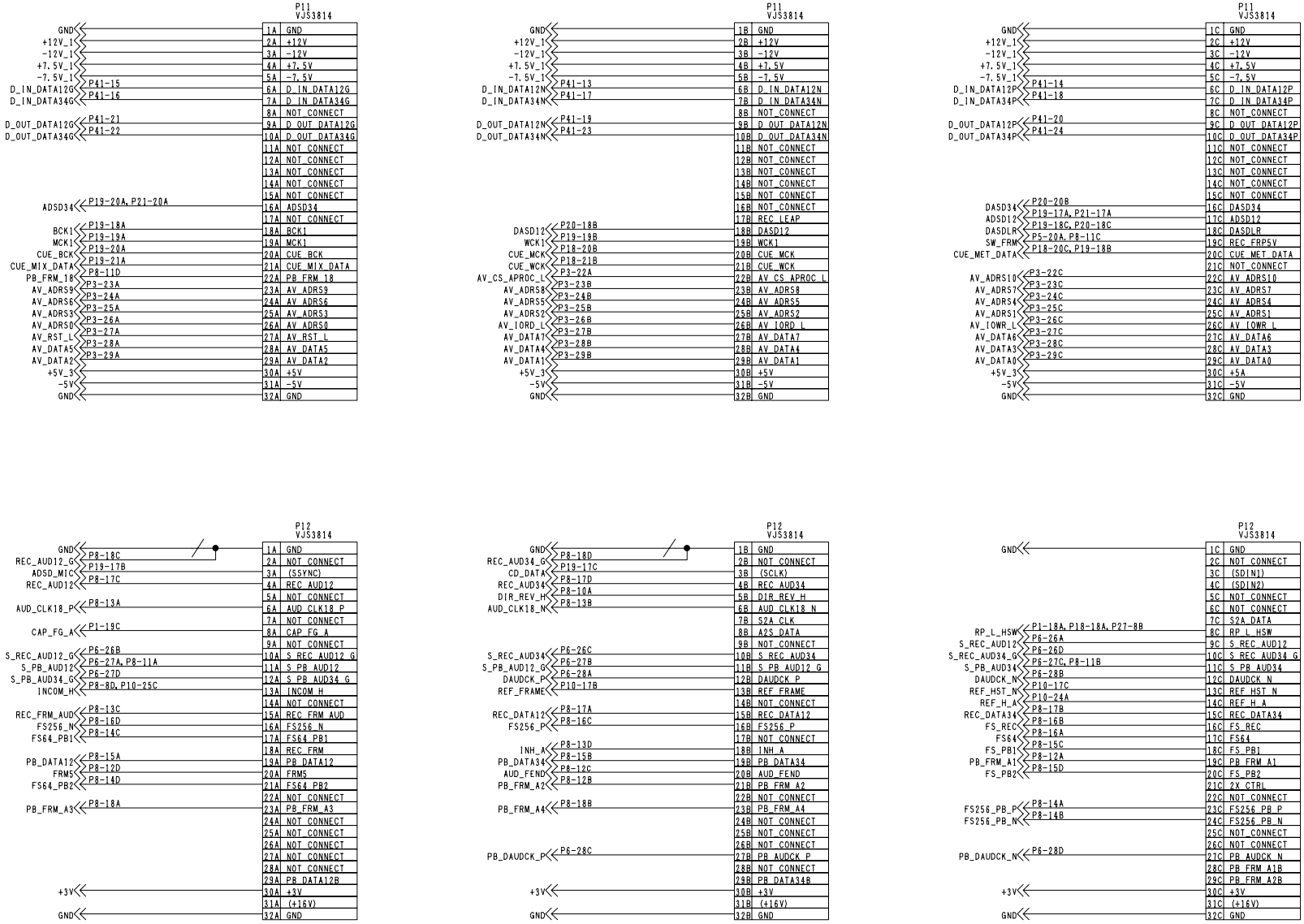

COMPONENT NAME	VTR_MOTHER (F6)	06/13
CIRCUIT BOARD NO.		DRAWING NO.
VEP80B76		KR0P40 (6/13)
		SCM195

F7
V_IN

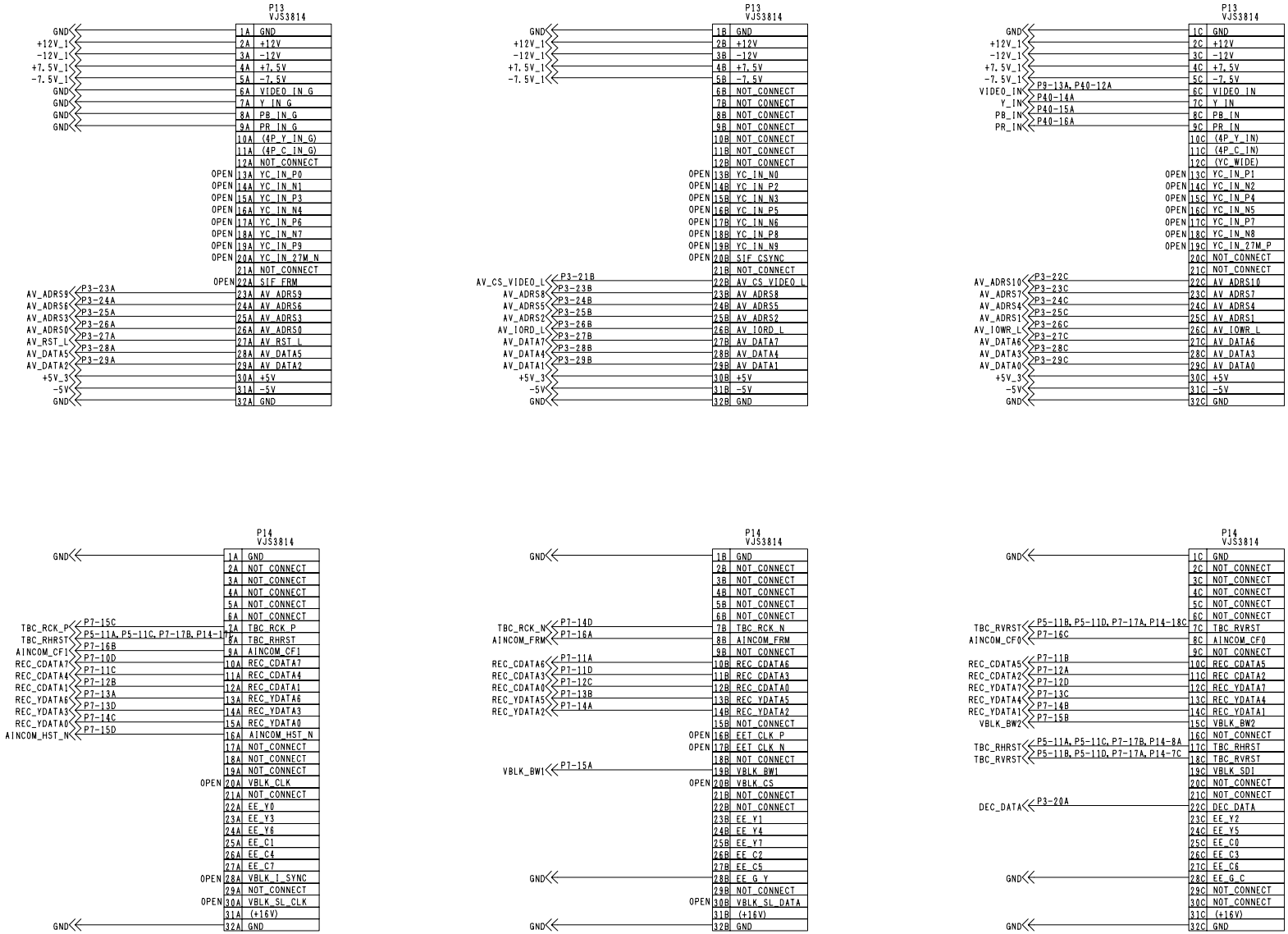

COMPONENT NAME	VTR_MOTHER (F7)	07/13
CIRCUIT BOARD NO.		DRAWING NO.
VEP80B76		KR0P40 (7/13)
		SCM196

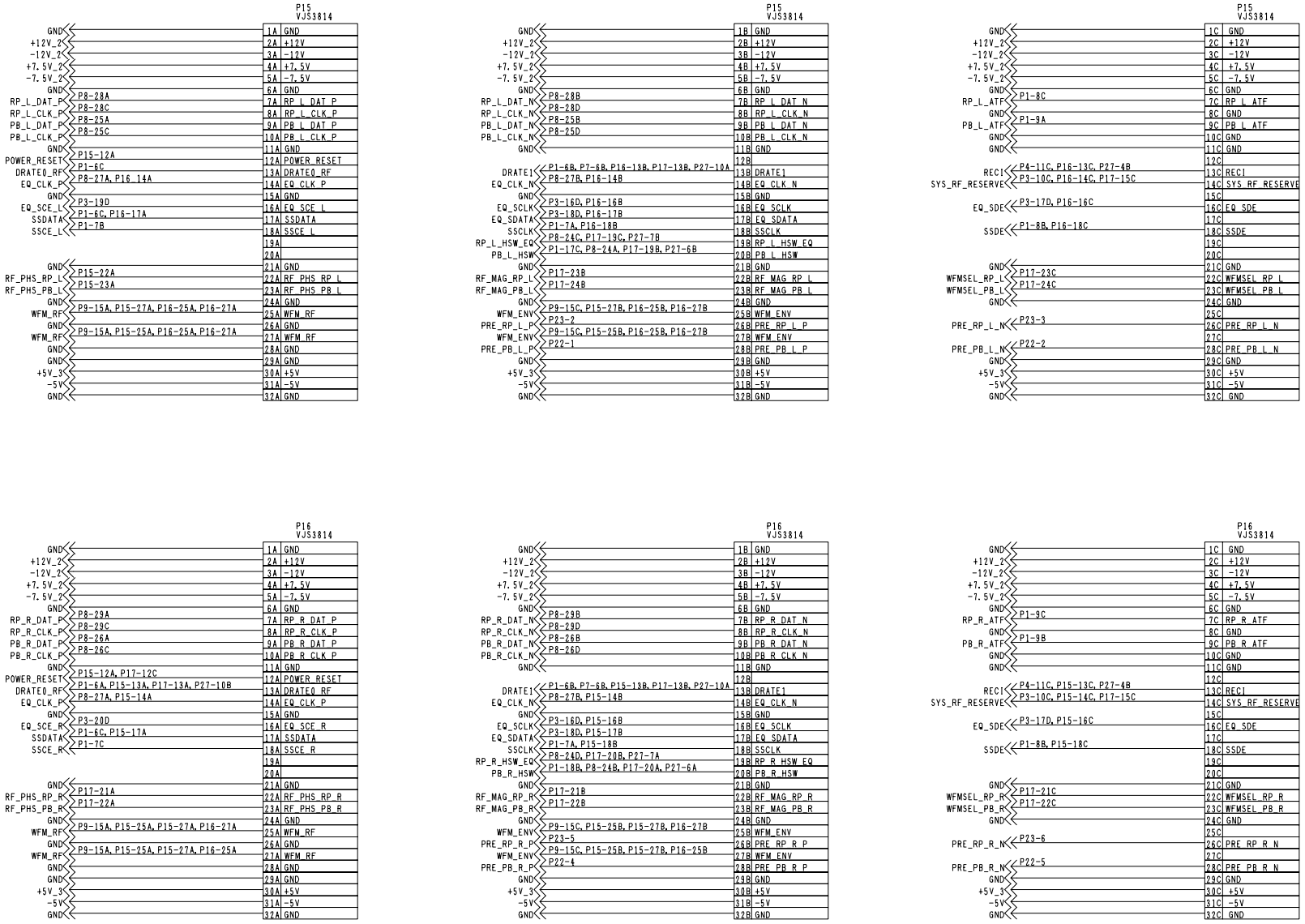

COMPONENT NAME	VTR_MOTHER (H1, H2)	08/13
CIRCUIT BOARD NO.		DRAWING NO.
VEP80B76		KR0P40 (8/13)
		SCM197

H3 EQ_MAIN

P17 VJS3814

GND		1A	GND
+12V_2		2A	+12V
-12V_2		3A	-12V
+7.5V_2		4A	+7.5V
-7.5V_2		5A	-7.5V
GND		6A	REC_CTRL1
		7A	RE_DRV1
GND		8A	EDA_REC_DAT_P
GND		9A	EDA_REC_CLK_P
		10A	REC_DATA_P
		11A	
GND		12A	REC_CTRL1
DRATE0_RF	P1-6A, P15-13A, P16-13A, P27-10B	13A	DRATE0
		14A	DATA_A_P
		15A	CLK_A_P
		16A	EQ_SCE
		17A	SV_SDATA
		18A	SV_SCE
GND		19A	PBL1R3_HSW
PB_R_HSW	P1-18B, P8-24B, P16-20B, P27-6A	20A	PBL4R2_HSW
RF_PHS_RP_R	P16-22A	21A	RF_PHS_PBR4L2
RF_PHS_PB_R	P16-23A	22A	RF_PHS_PBL4R2
RF_PHS_RP_L	P15-22A	23A	RF_PHS_RP
RF_PHS_PB_L	P15-23A	24A	RF_PHS_PBR1L3
		25A	REC_CURR
RF_CLK	P3-18A, P27-2B	26A	RF_CLK
		27A	WRF_RF_A
GND		28A	PRE_A_P
GND		29A	GND
+5V_3		30A	+5V
-5V		31A	-5V
GND		32A	GND

P17 VJS3814

GND		1B	GND
+12V_2		2B	+12V
-12V_2		3B	-12V
+7.5V_2		4B	+7.5V
-7.5V_2		5B	-7.5V
GND		6B	RE_CTRL2
		7B	RE_DRV2
		8B	EDA_REC_DAT_N
		9B	EDA_REC_CLK_N
		10B	REC_DATA_N
		11B	REC_CTRL
GND		12B	REC_CTRL2
DRATE1	P1-6B, P7-6B, P15-13B, P16-13B, P27-10A	13B	DRATE1
		14B	DATA_A_N
		15B	CLK_A_N
		16B	EQ_SCLK
		17B	EQ_SDATA
		18B	SV_SCLK
PB_L_HSW	P1-17C, P8-24A, P15-20B, P27-6B	19B	PBR1L3_HSW
RP_R_HSW_EQ	P8-24D, P16-19B, P27-7A	20B	RBR4L2_HSW
RF_MAG_RP_R	P16-22B	21B	RF_MAG_PBR4L2
RF_MAG_PB_R	P16-23B	22B	RF_MAG_PBL4R2
RF_MAG_RP_L	P15-22B	23B	RF_MAG_RP
RF_MAG_PB_L	P15-23B	24B	RF_MAG_PBR1L3
		25B	REC_FREQ
RF_DATA	P3-18B	26B	RF_DATA
		27B	WFM_ENV_A
GND		28B	PRE_A_N
GND		29B	GND
+5V_3		30B	+5V
-5V		31B	-5V
GND		32B	GND

P17 VJS3814

GND		1C	GND
+12V_2		2C	+12V
-12V_2		3C	-12V
+7.5V_2		4C	+7.5V
-7.5V_2		5C	-7.5V
		6C	
		7C	
		8C	REC_CLK_P
		9C	REC_CLK_N
GND		10C	GND
		11C	REC_AREA
POWER_RESET	P15-12A, P16-12A	12C	POWER_RESET
		13C	ATF_A
GND		14C	REC!
SYS_RF_RESERVE	P3-10C, P15-14C, P16-14C	15C	SYS_RESET
		16C	EQ_SDE
		17C	
		18C	SV_SDE
RP_L_HSW_EQ	P8-24C, P15-19B, P27-7B	19C	RP_HSW
		20C	
WFMSEL_RP_R	P16-22C	21C	WFMSEL_PBR4L2
WFMSEL_PB_R	P16-23C	22C	WFMSEL_PBL4R2
WFMSEL_RP_L	P15-22C	23C	WFMSEL_RP
WFMSEL_PB_L	P15-23C	24C	WFMSEL_PBR1L3
		25C	
EQ_LD_H	P3-19A	26C	RF_HALD_H
		27C	ENV_A
GND		28C	GND
GND		29C	GND
+5V_3		30C	+5V
-5V		31C	-5V
GND		32C	GND

H4 CUE

P18 VJS3814

GND		1A	GND
+12V_2		2A	+12V
-12V_2		3A	-12V
+7.5V_2		4A	+7.5V
-7.5V_2		5A	-7.5V
		6A	(CUE_IN_C)
GND		7A	GND
		8A	(CUE_OUT_C)
GND		9A	GND
		10A	NOT_CONNECT
		11A	NOT_CONNECT
		12A	NOT_CONNECT
		13A	NOT_CONNECT
		14A	NOT_CONNECT
		15A	NOT_CONNECT
		16A	NOT_CONNECT
		17A	NOT_CONNECT
RP_L_HSW	P1-18A, P12-8C, P27-8B	18A	RP_L_HSW
		19A	NOT_CONNECT
CUE_BCK	P11-20A	20A	CUE_BCK
CUE_MIX_DATA	P11-21A	21A	CUE_MIX_DATA
		22A	
AV_ADRS9	P3-23A	23A	AV_ADRS9
AV_ADRS6	P3-24A	24A	AV_ADRS6
AV_ADRS3	P3-25A	25A	AV_ADRS3
AV_ADRS0	P3-26A	26A	AV_ADRS0
AV_RST_L	P3-27A	27A	AV_RST_L
AV_DATA5	P3-28A	28A	AV_DATA5
AV_DATA2	P3-29A	29A	AV_DATA2
+5V_3		30A	+5V
-5V		31A	-5V
GND		32A	GND

P18 VJS3814

GND		1B	GND
+12V_2		2B	+12V
-12V_2		3B	-12V
+7.5V_2		4B	+7.5V
-7.5V_2		5B	-7.5V
		6B	(CUE_IN_G)
GND		7B	GND
		8B	(CUE_OUT_G)
GND		9B	GND
		10B	NOT_CONNECT
		11B	NOT_CONNECT
		12B	NOT_CONNECT
		13B	NOT_CONNECT
		14B	NOT_CONNECT
		15B	NOT_CONNECT
		16B	NOT_CONNECT
		17B	ALPF_SEL1
		18B	NOT_CONNECT
DRATE0_AV	P1-15C, P7-6A	19B	9H_18L
CUE_MCK	P11-20B	20B	CUE_MCK
CUE_WCK	P11-21B	21B	CUE_WCK
AV_CS_AUDIO_L	P3-22B	22B	AV_CS_AUDIO_L
AV_ADRS8	P3-23B	23B	AV_ADRS8
AV_ADRS5	P3-24B	24B	AV_ADRS5
AV_ADRS2	P3-25B	25B	AV_ADRS2
AV_IORD_L	P3-26B	26B	AV_IORD_L
AV_DATA7	P3-27B	27B	AV_DATA7
AV_DATA4	P3-28B	28B	AV_DATA4
AV_DATA1	P3-29B	29B	AV_DATA1
+5V_3		30B	+5V
-5V		31B	-5V
GND		32B	GND

P18 VJS3814

GND		1C	GND
+12V_2		2C	+12V
-12V_2		3C	-12V
+7.5V_2		4C	+7.5V
-7.5V_2		5C	-7.5V
		6C	(CUE_IN_H)
GND		7C	GND
		8C	(CUE_OUT_H)
GND		9C	GND
		10C	NOT_CONNECT
		11C	NOT_CONNECT
		12C	NOT_CONNECT
		13C	NOT_CONNECT
		14C	NOT_CONNECT
		15C	NOT_CONNECT
		16C	NOT_CONNECT
		17C	ALPF_SEL0
CYL_FG-	P2-18B, P28-34B	18C	CYL_FG-
		19C	NOT_CONNECT
CUE_MET_DATA	P11-20C	20C	CUE_MET_DATA
		21C	NOT_CONNECT
AV_ADRS10	P3-22C	22C	AV_ADRS10
AV_ADRS7	P3-23C	23C	AV_ADRS7
AV_ADRS4	P3-24C	24C	AV_ADRS4
AV_ADRS1	P3-25C	25C	AV_ADRS1
AV_IOWR_L	P3-26C	26C	AV_IOWR_L
AV_DATA6	P3-27C	27C	AV_DATA6
AV_DATA3	P3-28C	28C	AV_DATA3
AV_DATA0	P3-29C	29C	AV_DATA0
+5V_3		30C	+5V
-5V		31C	-5V
GND		32C	GND

COMPONENT NAME	VTR_MOTHER (H3, H4)	09/13
CIRCUIT BOARD NO.		DRAWING NO.
VEP80B76		KR0P40 (9/13)
		SCM198

H5
A_MONI_MIC

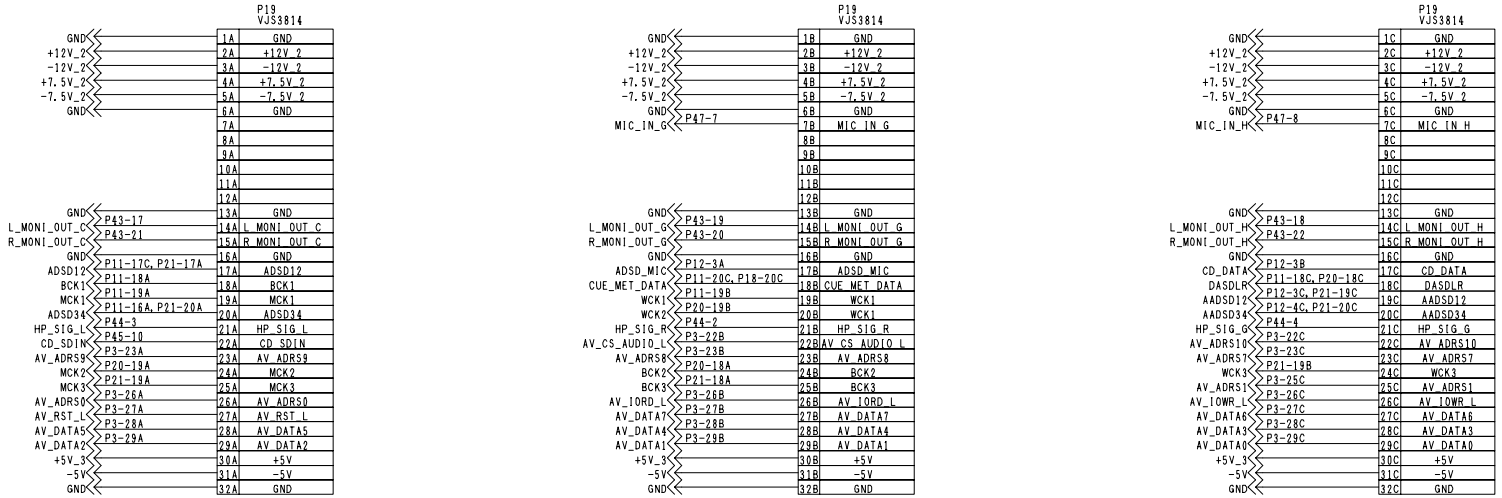

H6
A_DA

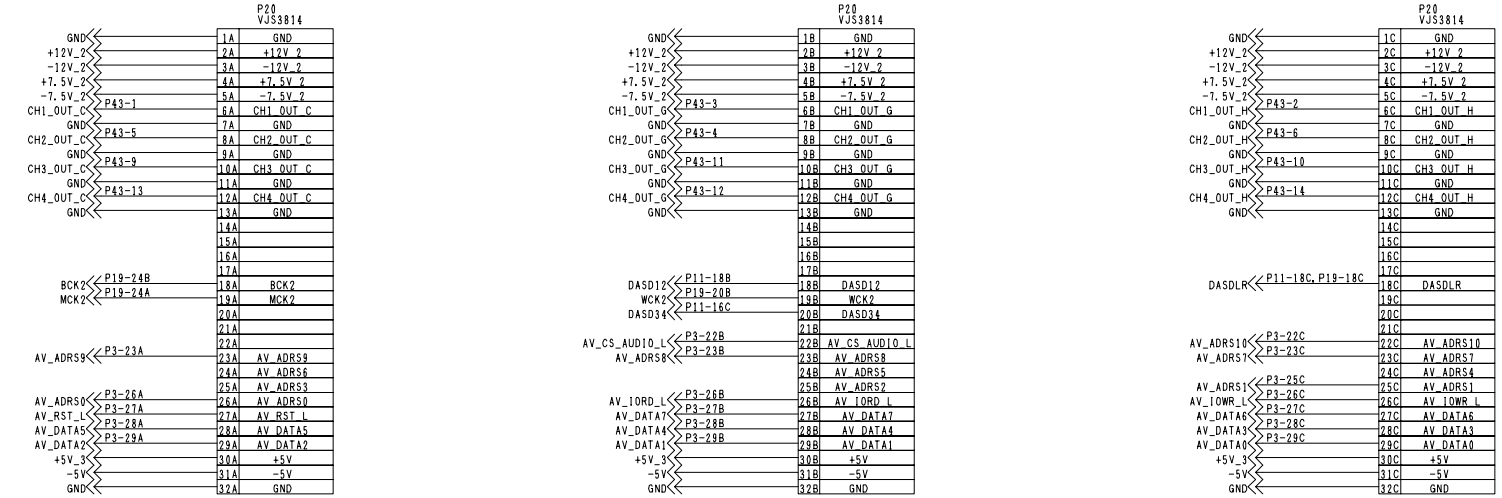

COMPONENT NAME	VTR_MOTHER (H5, H6)	10/13
CIRCUIT BOARD NO.		DRAWING NO.
VEP80B76		KR0P40 (10/13)
		SCM199

H7

A_AD

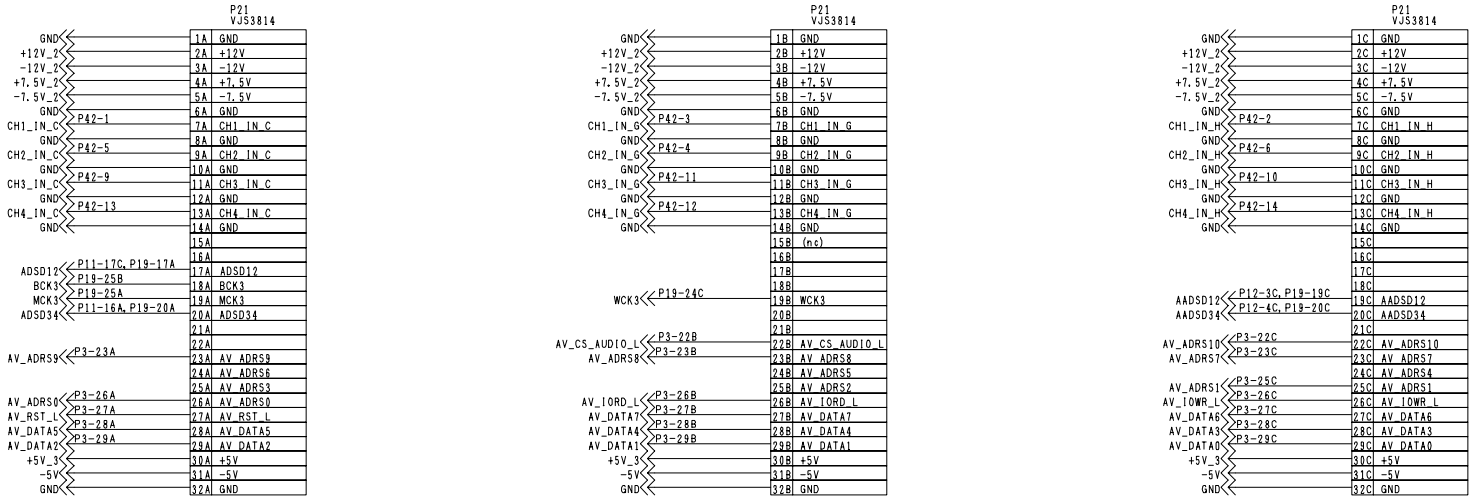

COMPONENT NAME	VTR_MOTHER (H7)	11/13
CIRCUIT BOARD NO.	DRAWING NO.	
VEP80B76	KR0P40 (11/13)	
	SCM200	

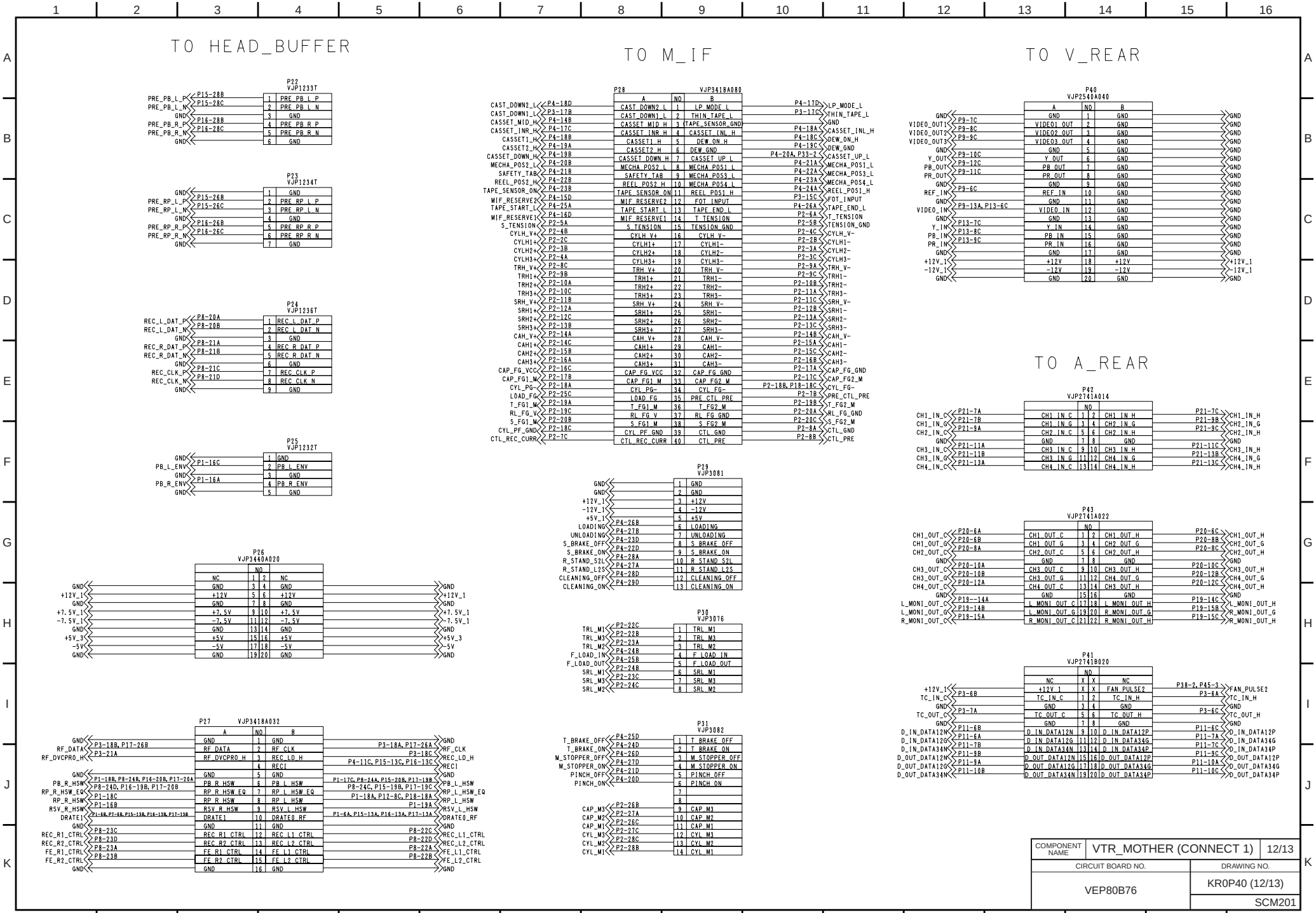
TO HEAD_BUFFER
TO M_IF
TO V_REAR
TO A_REAR
P22 VJP1233T
P23 VJP1234T
P24 VJP1236T
P25 VJP1232T
P26 VJP3440A020
P27 VJP3418A032
P28 VJP3418A080
P29 VJP3081
P30 VJP3076
P31 VJP3082
P40 VJP2540A040
P42 VJP2741A014
P43 VJP2741A022
P41 VJP2741B020
COMPONENT NAME
VTR_MOTHER (CONNECT 1)
12/13
CIRCUIT BOARD NO.
VEP80B76
DRAWING NO.
KR0P40 (12/13)
SCM201

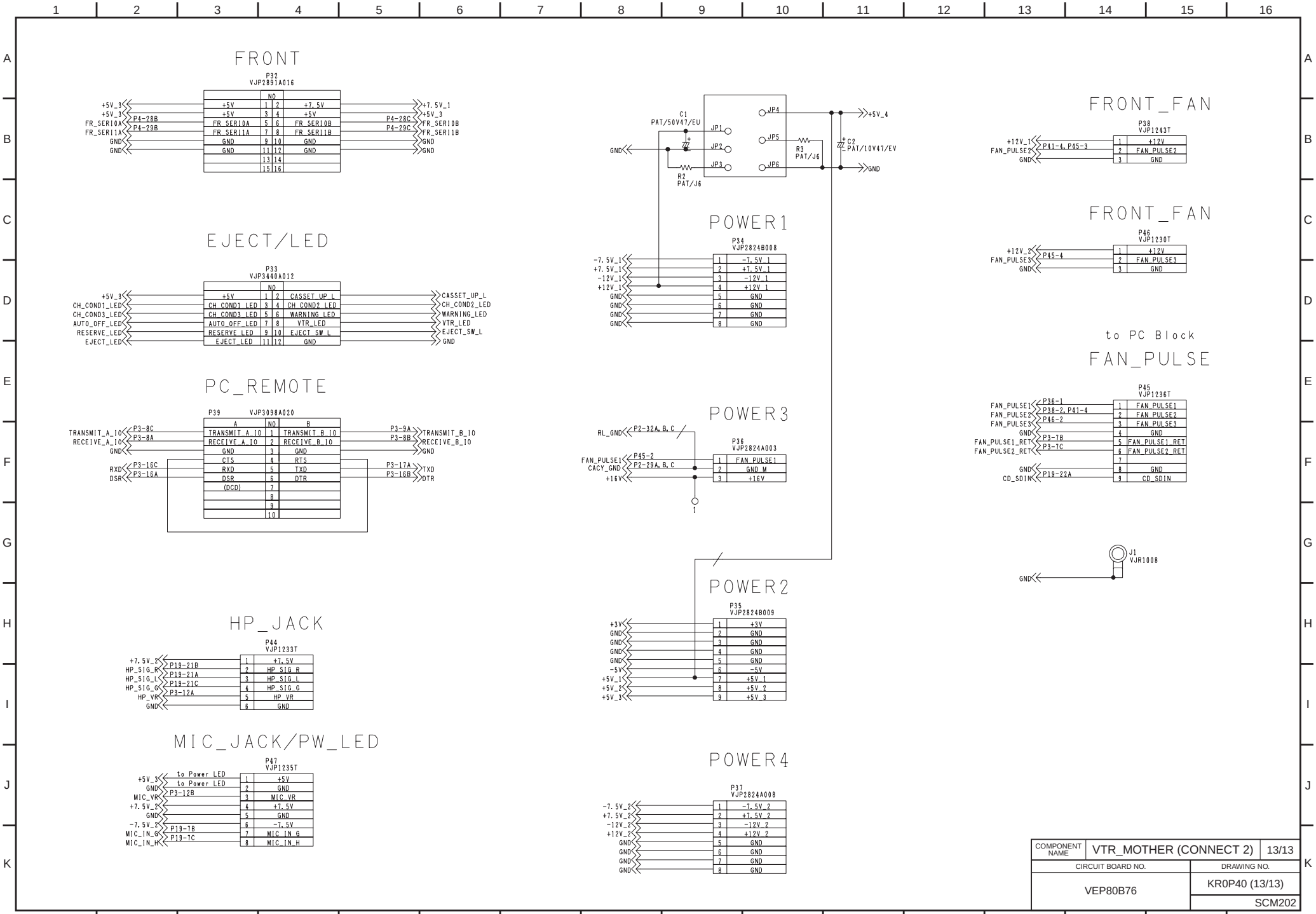
FRONT
P32
VJP2891A016
NO
+5V_3
+5V_3
P4-28B
P4-29B
FR_SERI0A
FR_SERI1A
GND
GND
+5V
+5V
FR_SERI0A
FR_SERI1A
GND
GND
+7.5V
+5V
FR_SERI0B
FR_SERI1B
GND
GND
+7.5V_1
+5V_3
P4-28C
P4-29C
FR_SERI0B
FR_SERI1B
GND
GND
EJECT/LED
P33
VJP3440A012
+5V_3
CH_COND1_LED
CH_COND3_LED
AUTO_OFF_LED
RESERVE_LED
EJECT_LED
+5V
CH_COND1_LED
CH_COND3_LED
AUTO_OFF_LED
RESERVE_LED
EJECT_LED
CASSET_UP_L
CH_COND2_LED
WARNING_LED
VTR_LED
EJECT_SW_L
GND
PC_REMOTE
P39
VJP3098A020
TRANSMIT_A_IO
RECEIVE_A_IO
GND
RXD
DSR
P3-8C
P3-8A
P3-16C
P3-16A
TRANSMIT_A_IO
RECEIVE_A_IO
GND
CTS
RXD
DSR
(DCD)
TRANSMIT_B_IO
RECEIVE_B_IO
GND
RTS
TXD
DTR
P3-9A
P3-8B
P3-17A
P3-16B
TRANSMIT_B_IO
RECEIVE_B_IO
GND
TXD
DTR
HP_JACK
P44
VJP1233T
+7.5V_2
HP_SIG_R
HP_SIG_L
HP_SIG_G
HP_VR
GND
P19-21B
P19-21A
P19-21C
P3-12A
+7.5V
HP_SIG_R
HP_SIG_L
HP_SIG_G
HP_VR
GND
MIC_JACK/PW_LED
P47
VJP1235T
+5V_3
GND
MIC_VR
+7.5V_2
GND
-7.5V_2
MIC_IN_G
MIC_IN_H
to Power LED
to Power LED
P3-12B
P19-7B
P19-7C
+5V
GND
MIC_VR
+7.5V
GND
-7.5V
MIC_IN_G
MIC_IN_H
C1
PAT/50V47/EU
GND
R2
PAT/J6
JP1
JP2
JP3
JP4
JP5
JP6
R3
PAT/J6
C2
PAT/10V47/EV
+5V_4
GND
POWER1
P34
VJP2824B008
-7.5V_1
+7.5V_1
-12V_1
+12V_1
GND
GND
GND
GND
-7.5V_1
+7.5V_1
-12V_1
+12V_1
GND
GND
GND
GND
POWER3
RL_GND
P2-32A,B,C
FAN_PULSE1
CACY_GND
+16V
P45-2
P2-29A,B,C
P36
VJP2824A003
FAN_PULSE1
GND_M
+16V
POWER2
P35
VJP2824B009
+3V
GND
GND
GND
GND
-5V
+5V_1
+5V_2
+5V_3
+3V
GND
GND
GND
GND
-5V
+5V_1
+5V_2
+5V_3
POWER4
P37
VJP2824A008
-7.5V_2
+7.5V_2
-12V_2
+12V_2
GND
GND
GND
GND
-7.5V_2
+7.5V_2
-12V_2
+12V_2
GND
GND
GND
GND
FRONT_FAN
P38
VJP1243T
+12V_1
FAN_PULSE2
GND
P41-4,P45-3
+12V
FAN_PULSE2
GND
FRONT_FAN
P46
VJP1230T
+12V_2
FAN_PULSE3
GND
P45-4
+12V
FAN_PULSE3
GND
to PC Block
FAN_PULSE
P45
VJP1236T
FAN_PULSE1
FAN_PULSE2
FAN_PULSE3
GND
FAN_PULSE1_RET
FAN_PULSE2_RET
GND
CD_SDIN
P36-1
P38-2,P41-4
P46-2
P3-7B
P3-7C
P19-22A
FAN_PULSE1
FAN_PULSE2
FAN_PULSE3
GND
FAN_PULSE1_RET
FAN_PULSE2_RET
GND
CD_SDIN
J1
VJR1008
GND
COMPONENT NAME
VTR_MOTHER (CONNECT 2)
13/13
CIRCUIT BOARD NO.
VEP80B76
DRAWING NO.
KR0P40 (13/13)
SCM202

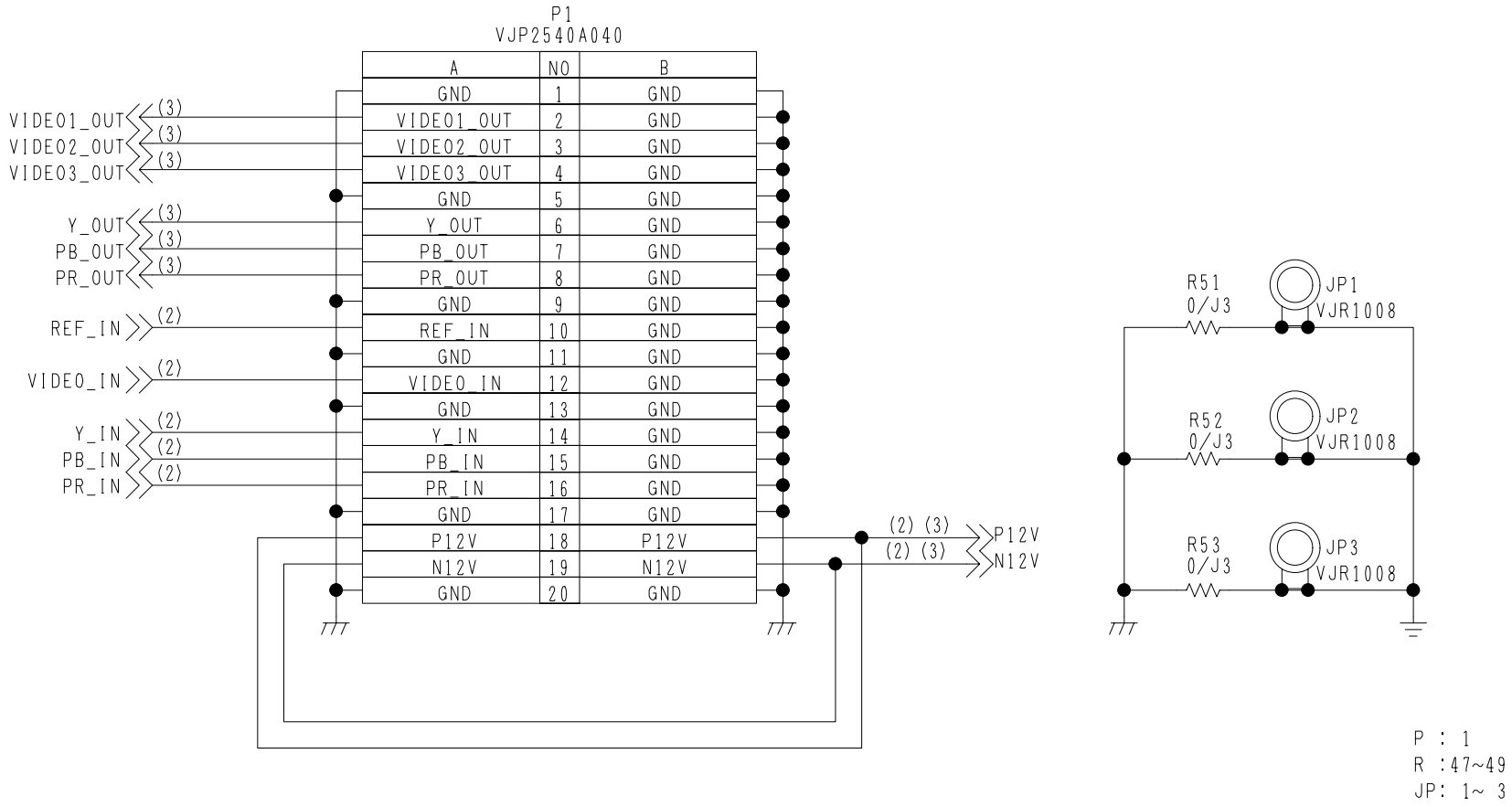

P : 1
R :47~49
JP: 1~ 3

COMPONENT NAME	VIDEO_REAR (CONNECTOR)	01/03
CIRCUIT BOARD NO.		DRAWING NO.
VEP83533		KR3Z99 (1/3)
		SCM203

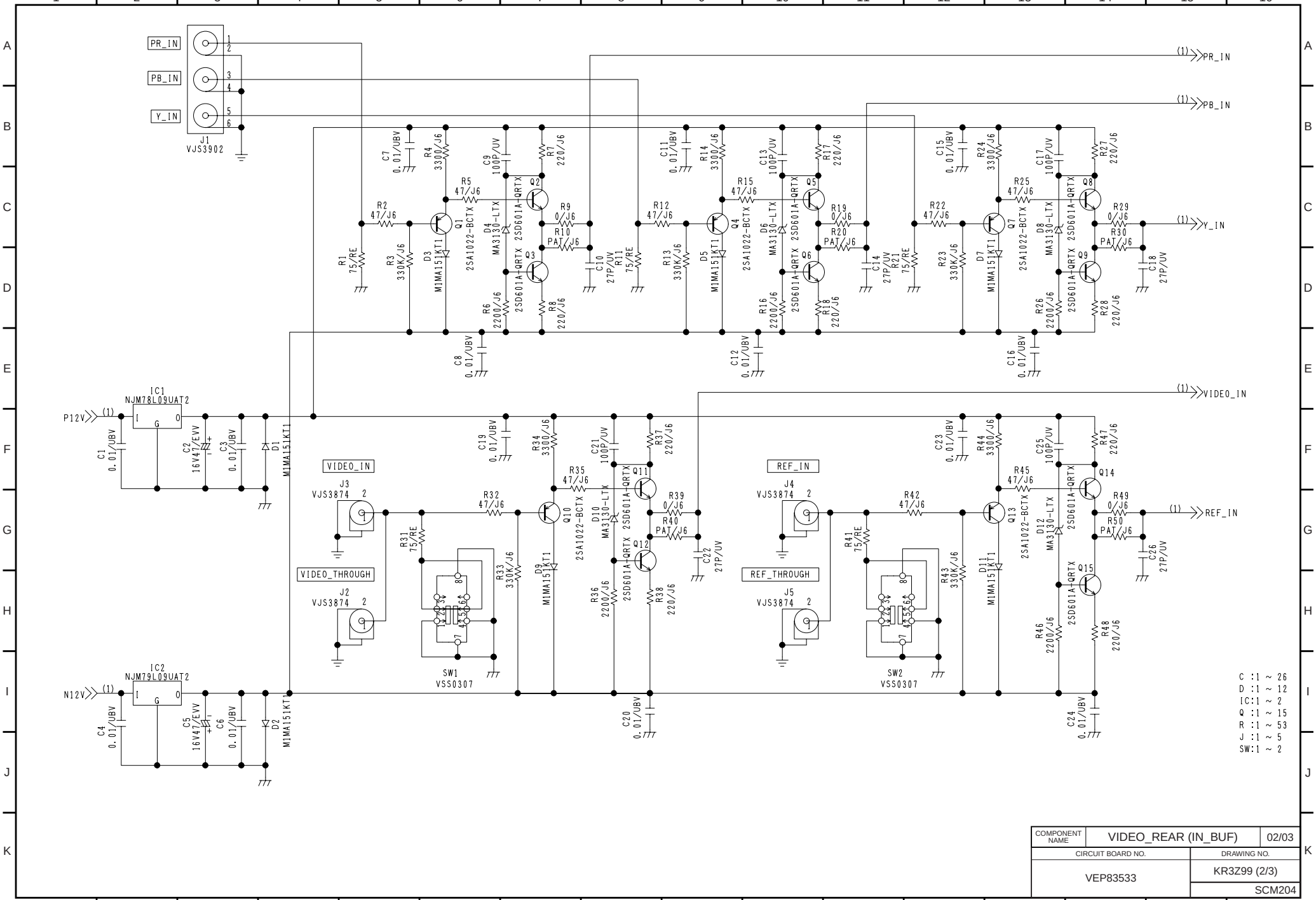

COMPONENT NAME	VIDEO_REAR (IN_BUF)	02/03
CIRCUIT BOARD NO.		DRAWING NO.
VEP83533		KR3Z99 (2/3)
		SCM204

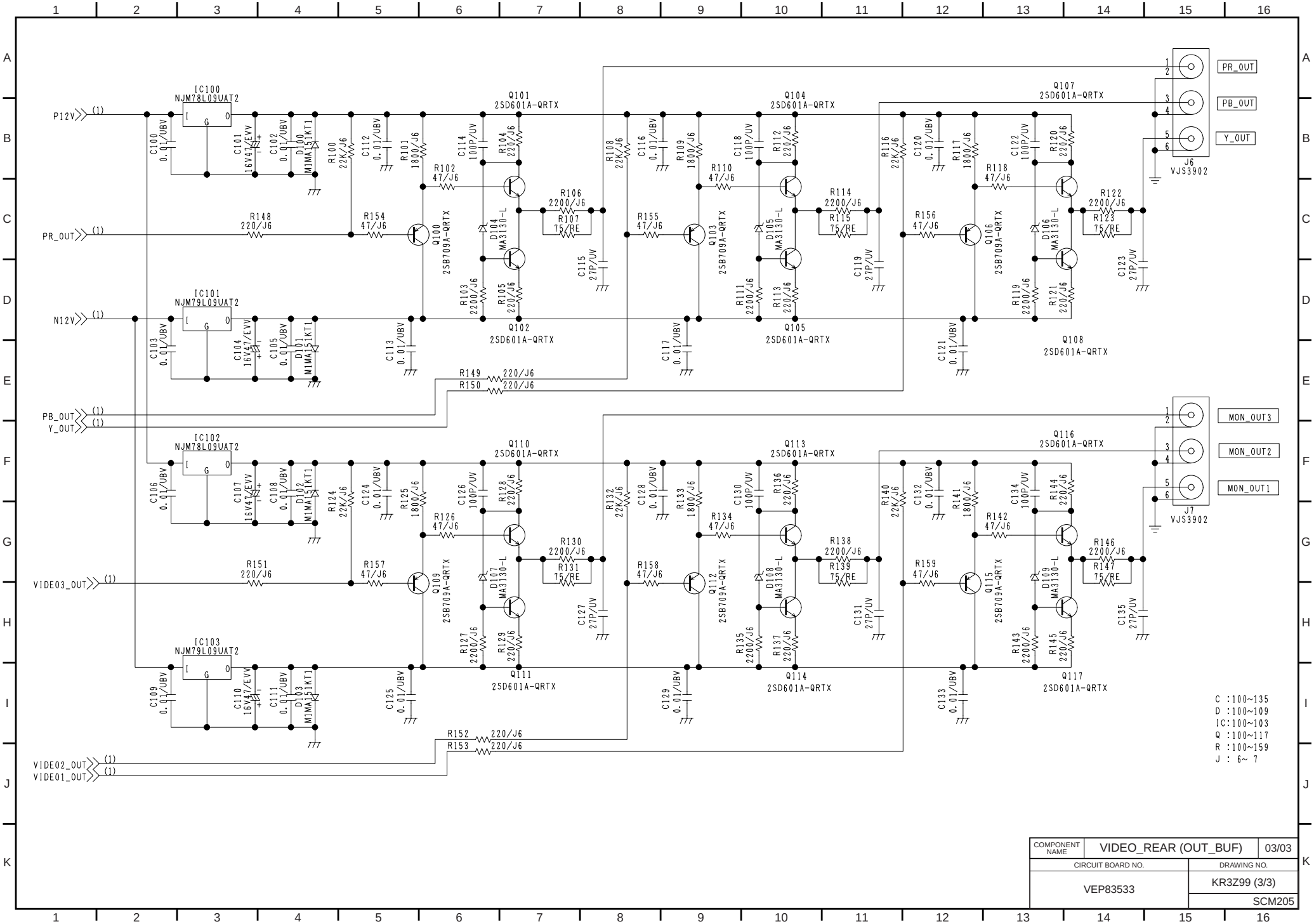

COMPONENT NAME	VIDEO_REAR (OUT_BUF)	03/03
CIRCUIT BOARD NO.		DRAWING NO.
VEP83533		KR3Z99 (3/3)
		SCM205

MODEL \ REF	J1~J4	L1~L8	R1~R4	R5~R8	L9~L16	J5~J10	L21~L32	L33~L44	J11	L51, L52	L53, L54	J12	L56, L57	L58~L59
JAPAN	VJP3417	PAT	PAT	PAT	VLP0147-T	VJS3417	VLP0147-T	PAT	VJP3417	PAT	VLP0147-T	PAT	VLP0147-T	PAT
AJ-DE97P/E	VJS3417	VLP0147-T	PAT	PAT	PAT	VJP3417	PAT	VLP0147-T	VJS3417	VLP0147-T	PAT	PAT	PAT	VLP0147-T

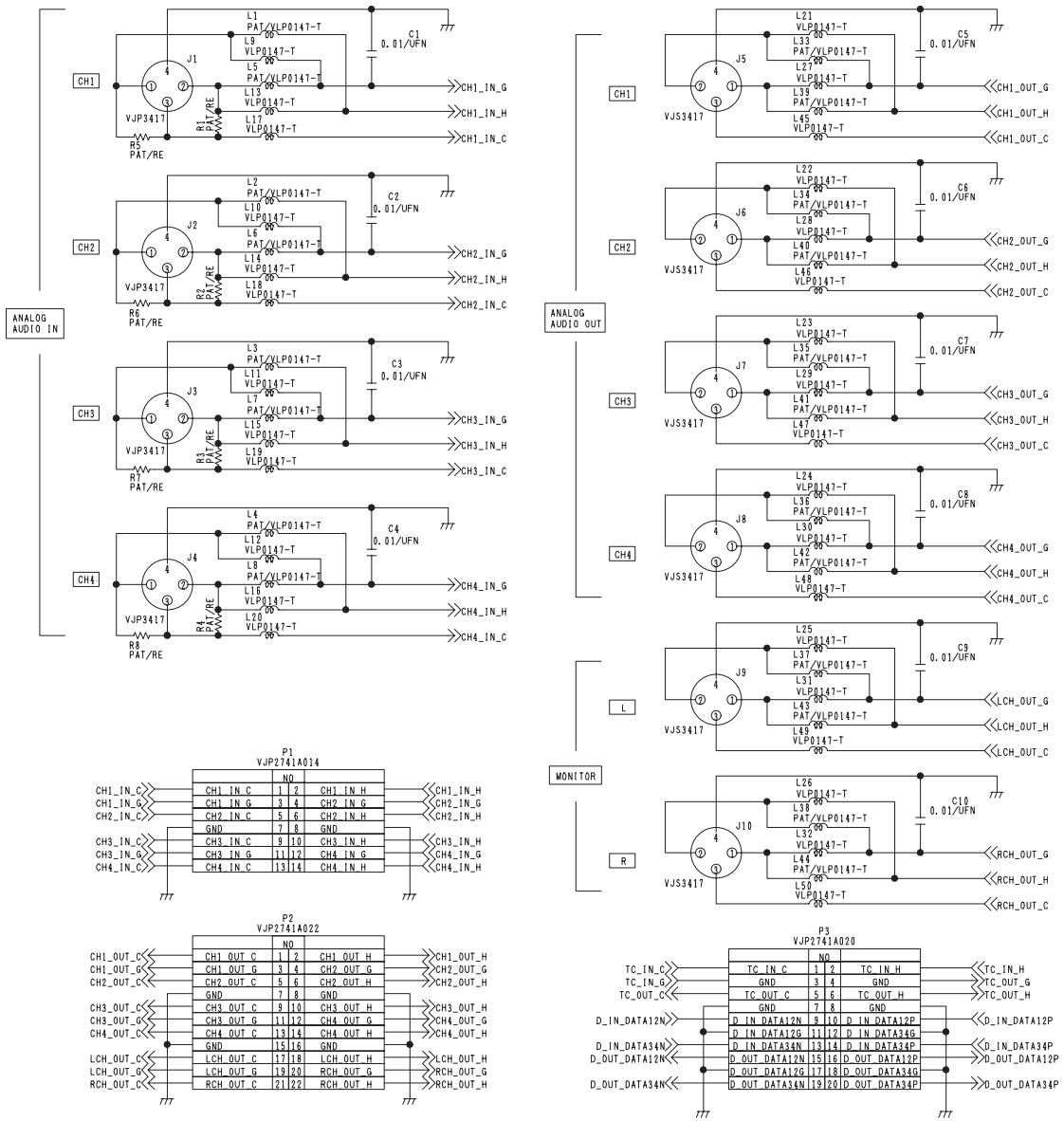

COMPONENT NAME	AUDIO_REAR (A_JACK)	01/01
CIRCUIT BOARD NO.		DRAWING NO.
VEP84362		KR4J77 (1/1)
		SCM206

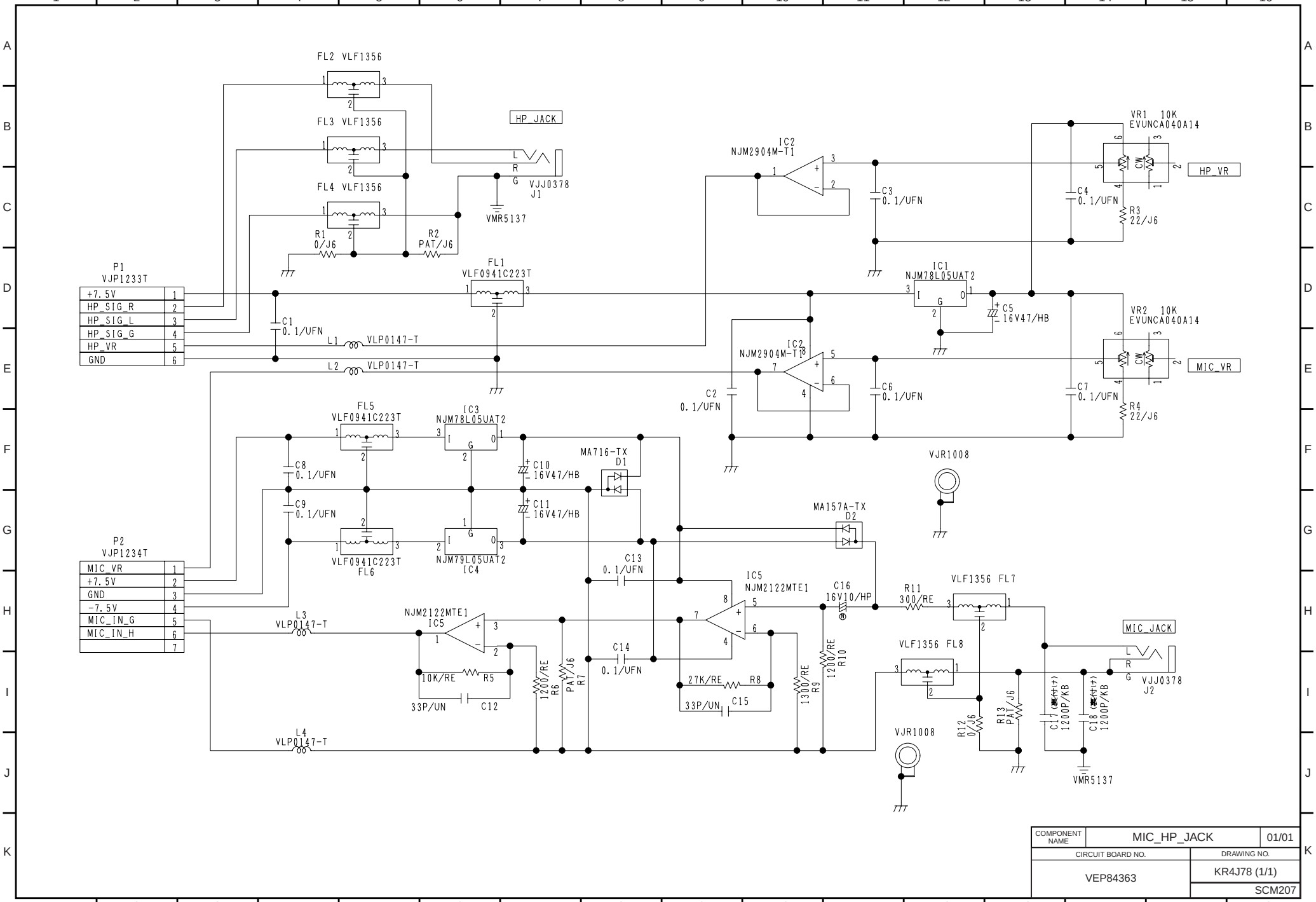

COMPONENT NAME	MIC_HP_JACK	01/01
CIRCUIT BOARD NO.	DRAWING NO.	
VEP84363	KR4J78 (1/1)	
	SCM207	

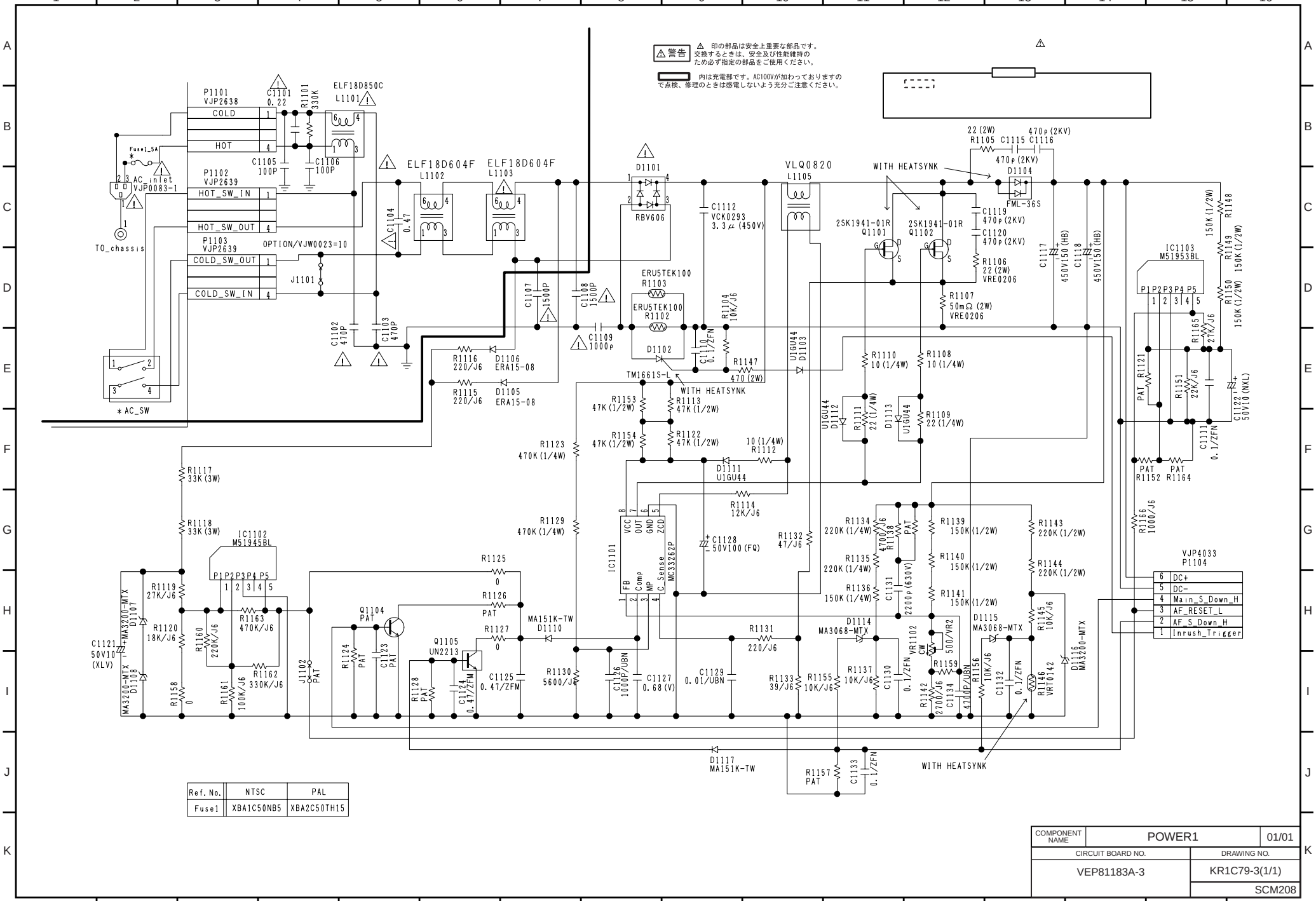

Ref. No.	NTSC	PAL
Fuse1	XBA1C50NB5	XBA2C50TH15

COMPONENT NAME	POWER1	01/01
CIRCUIT BOARD NO.	DRAWING NO.	
VEP81183A-3	KR1C79-3(1/1)	
	SCM208	

⚠警告 ⚠ 印の部品は安全上重要な部品です。
交換するときは、安全及び性能維持の
ため必ず指定の部品をご使用ください。

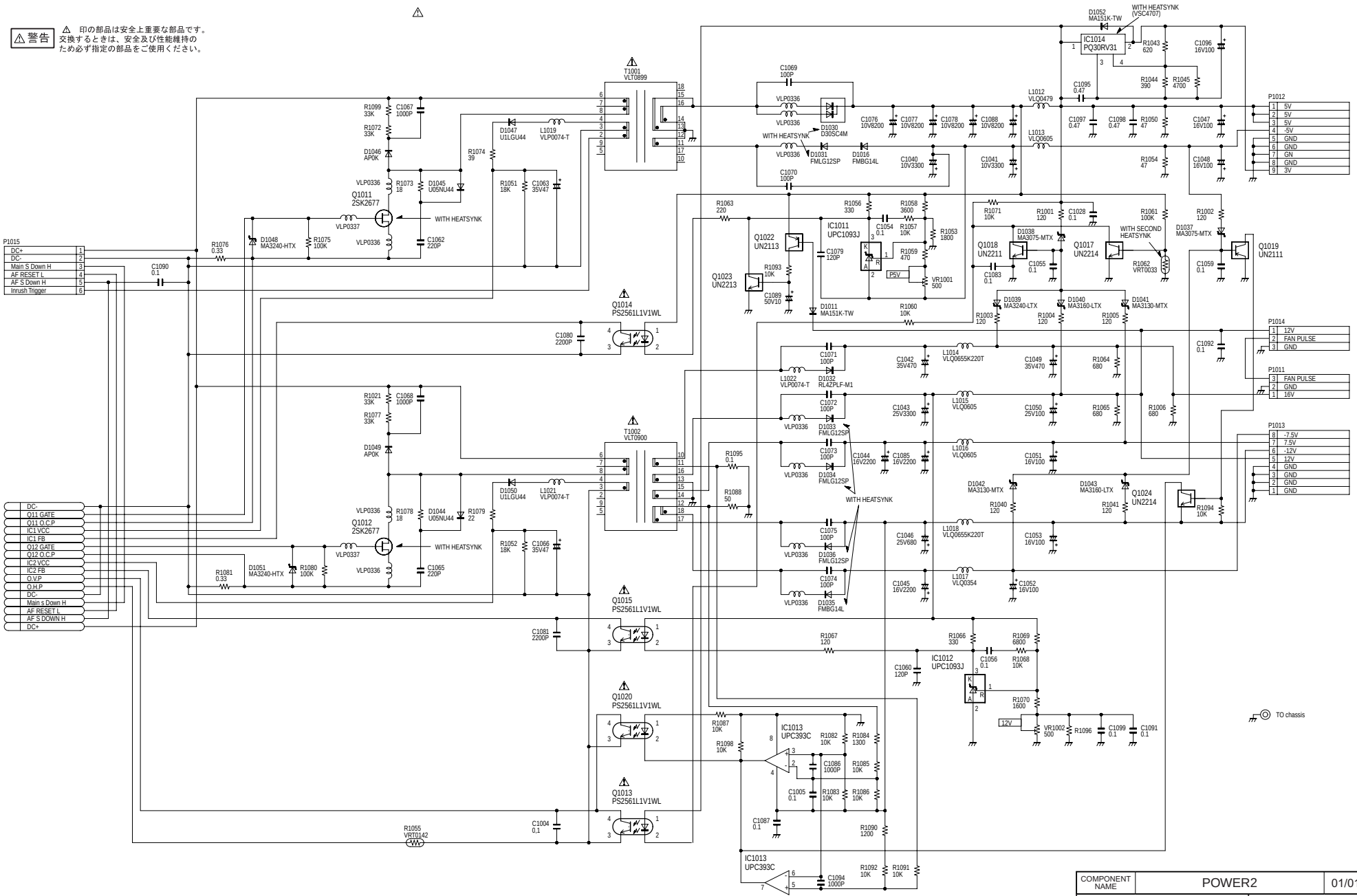

COMPONENT NAME	POWER2	01/01
CIRCUIT BOARD NO.	DRAWING NO.	
VEP81184A-5	KR1C80-3(1/1)	
	SCM209	

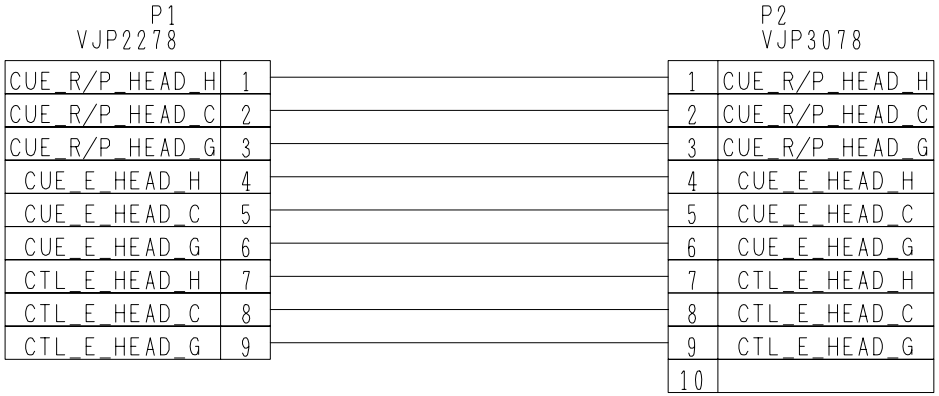

COMPONENT NAME	AC_HEAD_IF	01/01
CIRCUIT BOARD NO.	DRAWING NO.	
VEP80B77	KR0P45 (1/1)	
	SCM210	

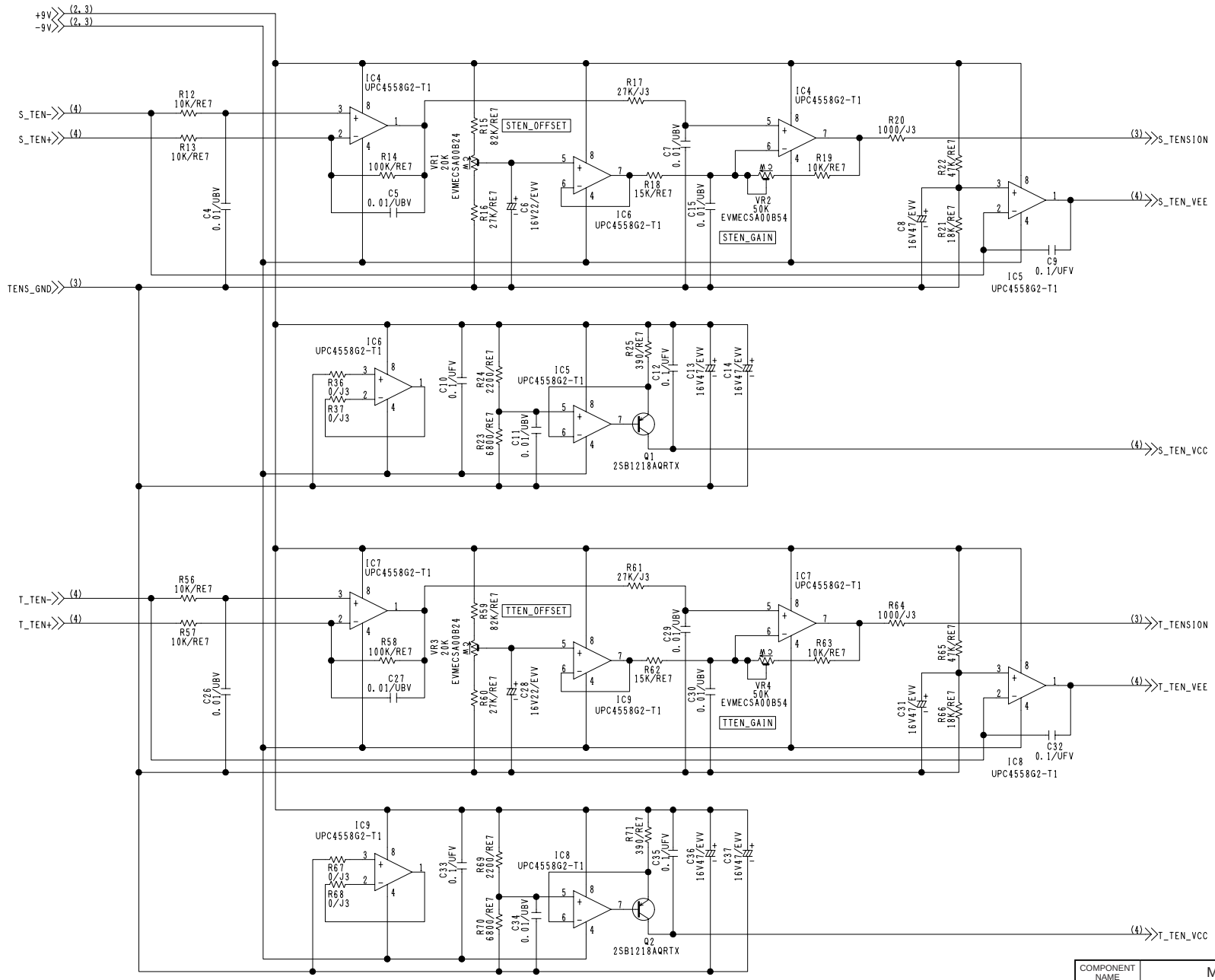

COMPONENT NAME	MECHA_I/F	01/04
CIRCUIT BOARD NO.		DRAWING NO.
VEP82231A-1		KR2D54(1/4)
		SCM211

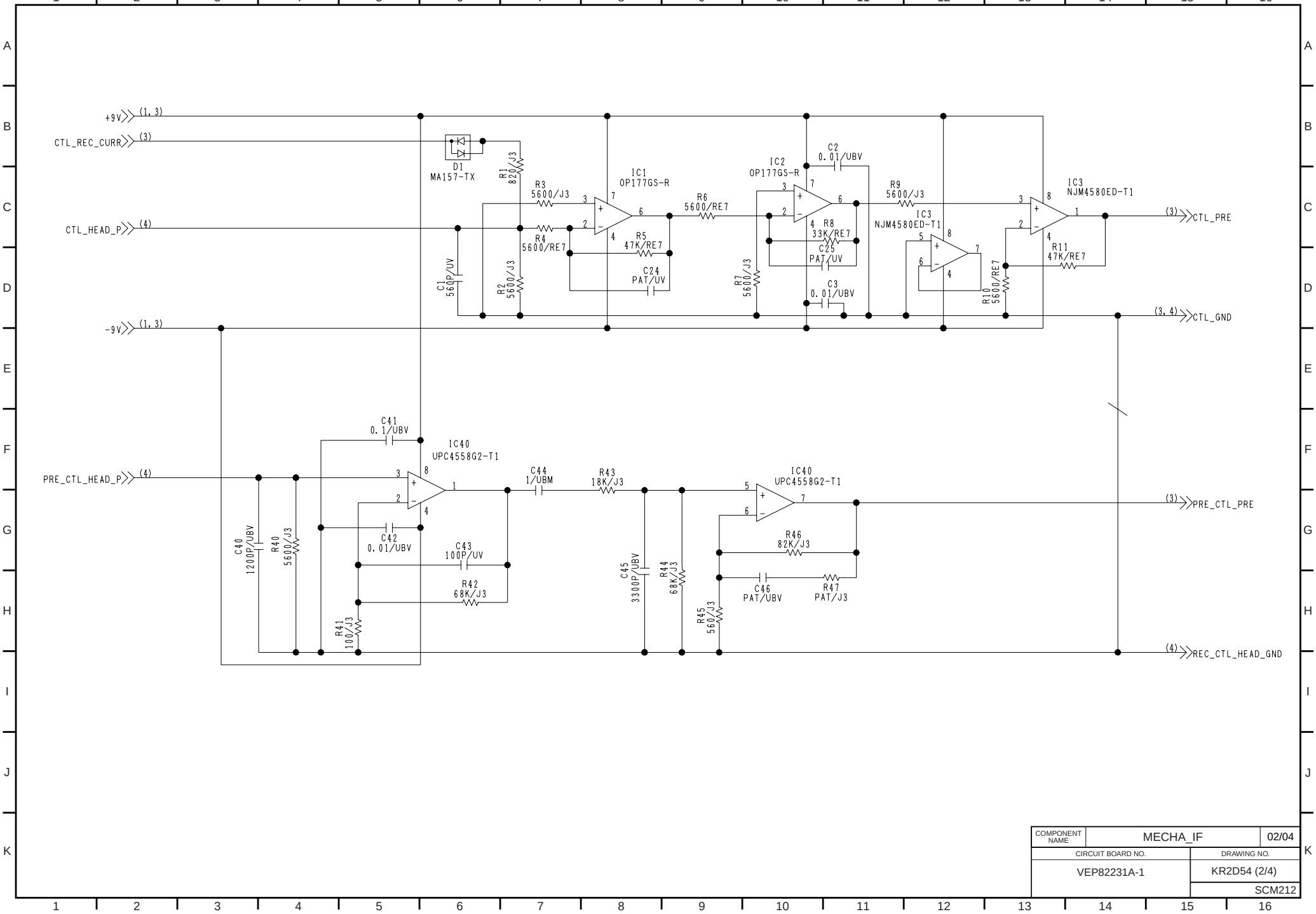

COMPONENT NAME	MECHA_IF	02/04
CIRCUIT BOARD NO.		DRAWING NO.
VEP82231A-1		KR2D54 (2/4)
		SCM212

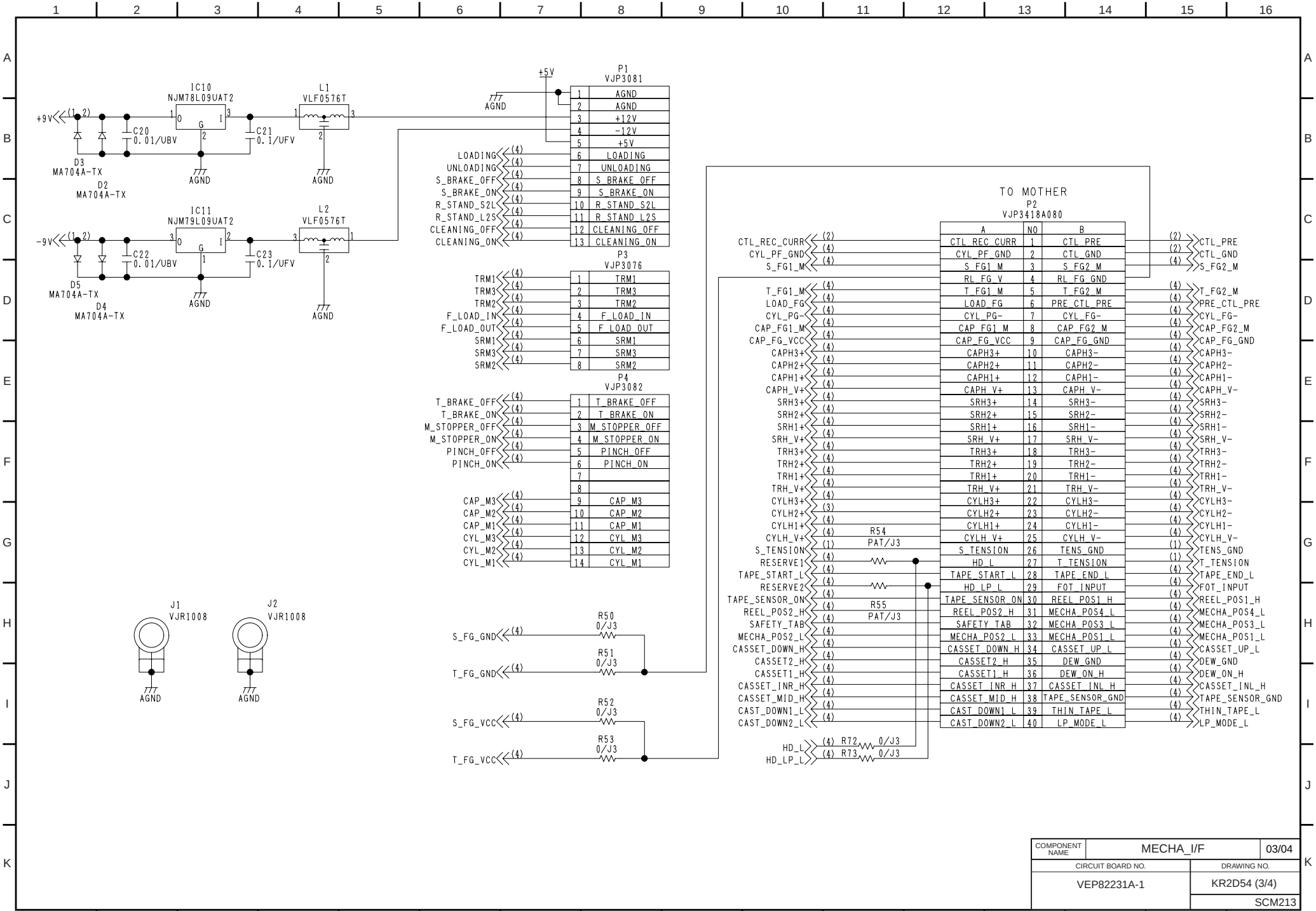
IC10
NJM78L09UAT2
IC11
NJM79L09UAT2
L1
VLF0576T
L2
VLF0576T
+9V
-9V
C20
0.01/UBV
C21
0.1/UFV
C22
0.01/UBV
C23
0.1/UFV
D3
MA704A-TX
D2
MA704A-TX
D5
MA704A-TX
D4
MA704A-TX
AGND
+5V
P1
VJP3081
P3
VJP3076
P4
VJP3082
J1
VJR1008
J2
VJR1008
R50
0/J3
R51
0/J3
R52
0/J3
R53
0/J3
R54
PAT/J3
R55
PAT/J3
R72
0/J3
R73
0/J3
TO MOTHER
P2
VJP3418A080
COMPONENT NAME
MECHA_I/F
03/04
CIRCUIT BOARD NO.
VEP82231A-1
DRAWING NO.
KR2D54 (3/4)
SCM213

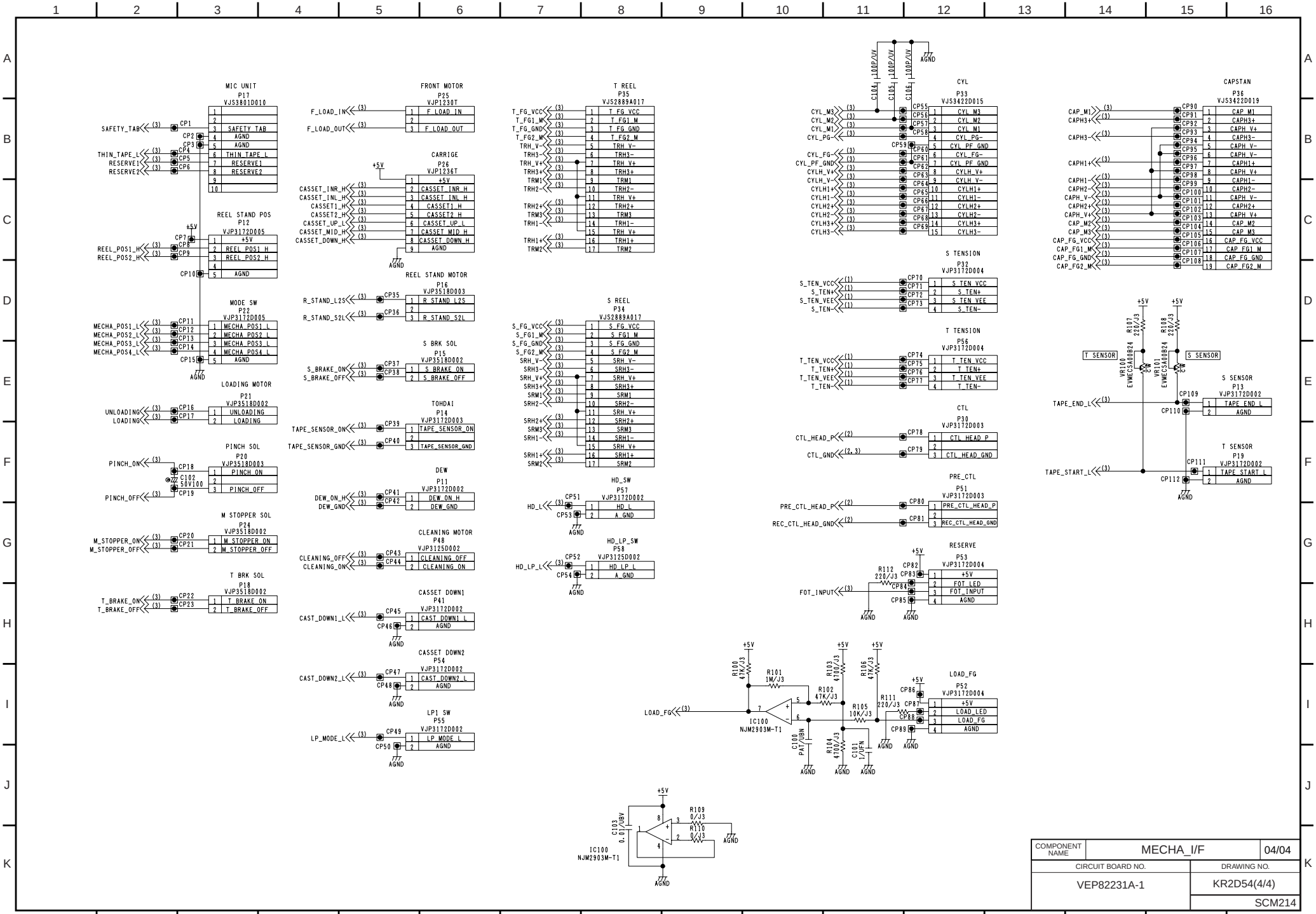

COMPONENT NAME	MECHA_I/F	04/04
CIRCUIT BOARD NO.		DRAWING NO.
VEP82231A-1		KR2D54(4/4)
		SCM214

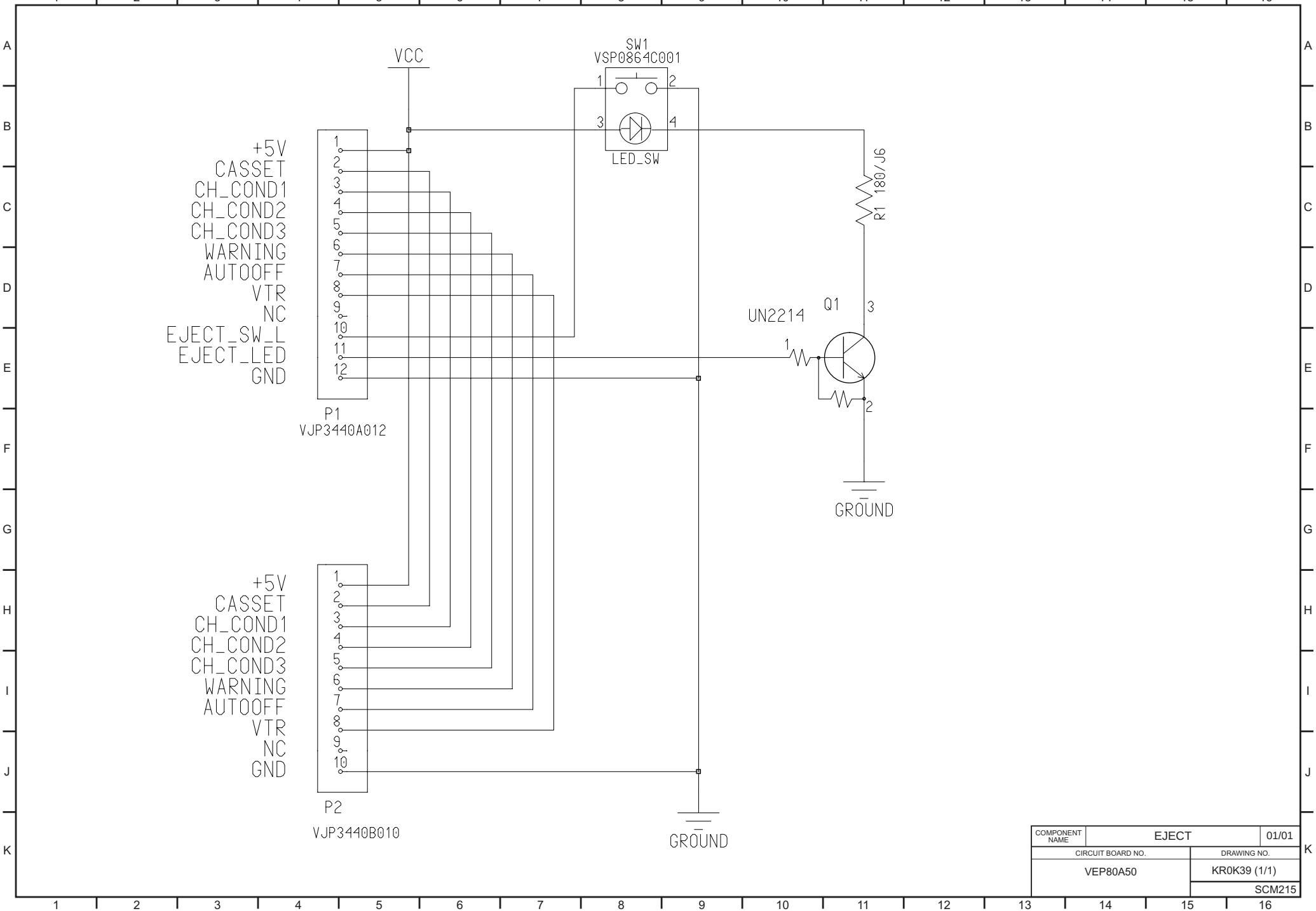

COMPONENT NAME	EJECT	01/01
CIRCUIT BOARD NO.		DRAWING NO.
VEP80A50		KR0K39 (1/1)
		SCM215

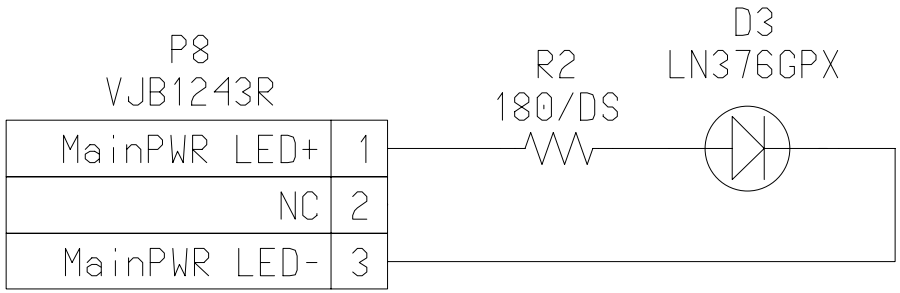

COMPONENT NAME	MAIN_POWER_LED	01/01
CIRCUIT BOARD NO.	DRAWING NO.	
VEP80A72	KR0K83 (1/1)	
	SCM217	

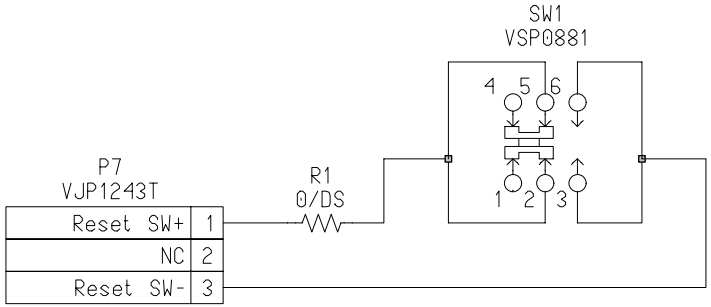

COMPONENT NAME	RESET_SW	01/01
CIRCUIT BOARD NO.	DRAWING NO.	
VEP80A62-1	KR0K70 (1/1)	
	SCM218	

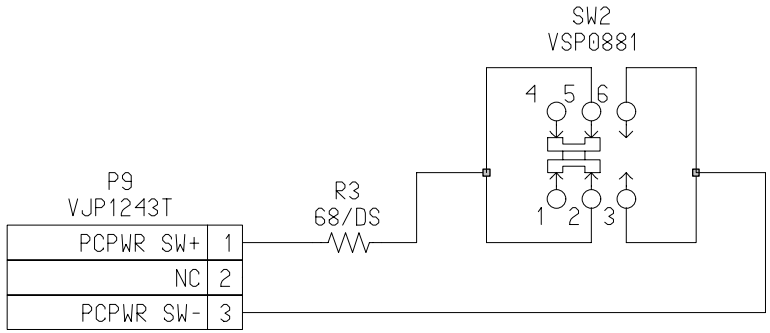

COMPONENT NAME	PC_POWER_SW	01/01
CIRCUIT BOARD NO.		DRAWING NO.
VEP80A70-1		KR0K81 (1/1)
		SCM219

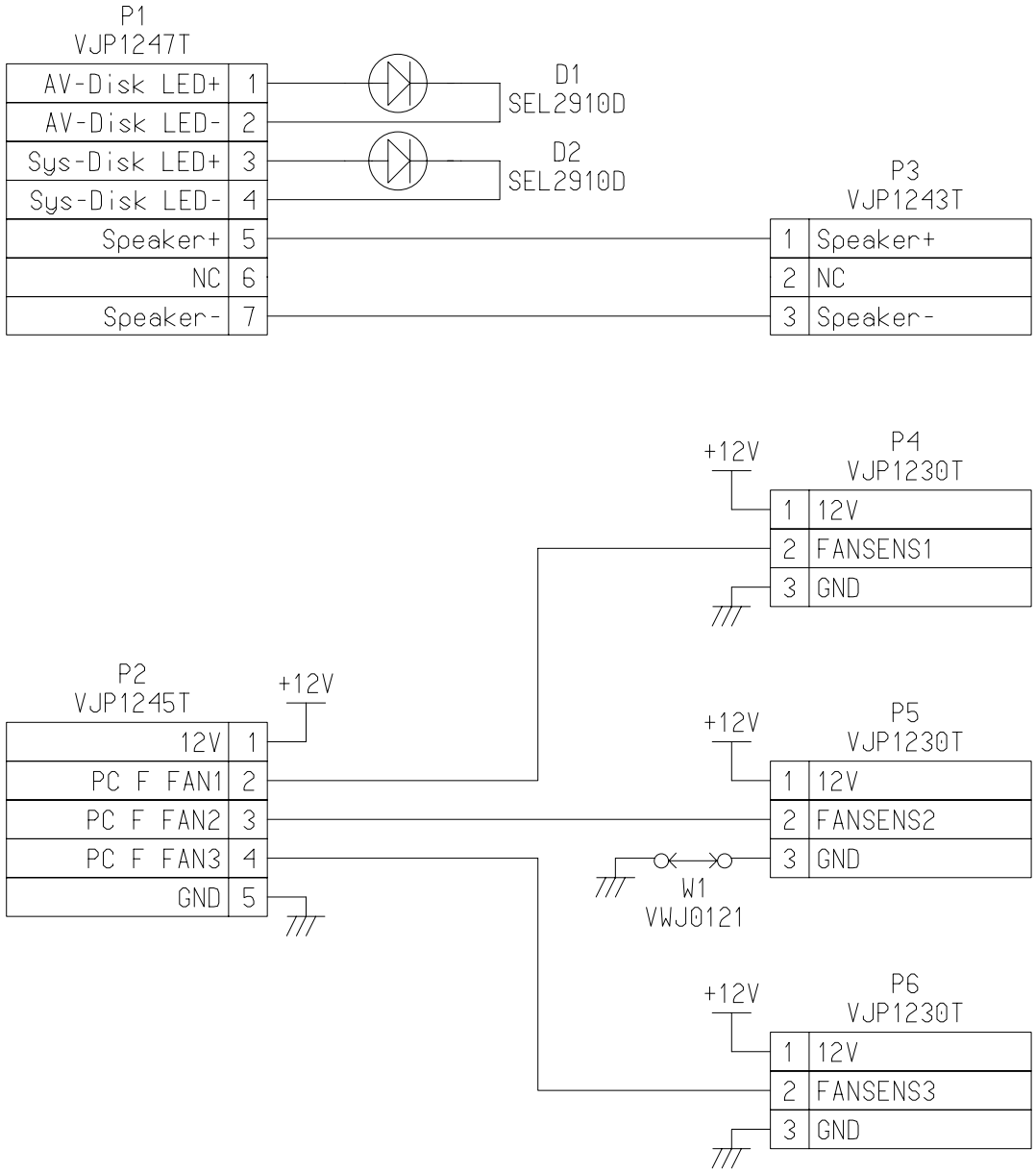

COMPONENT NAME	FAN_I/F	01/01
CIRCUIT BOARD NO.		DRAWING NO.
VEP80A63		KR0K71(1/1)
		SCM220

AJ-DE97

SCSI/SCA MOTHER. 1

SCSI CHANNEL A.

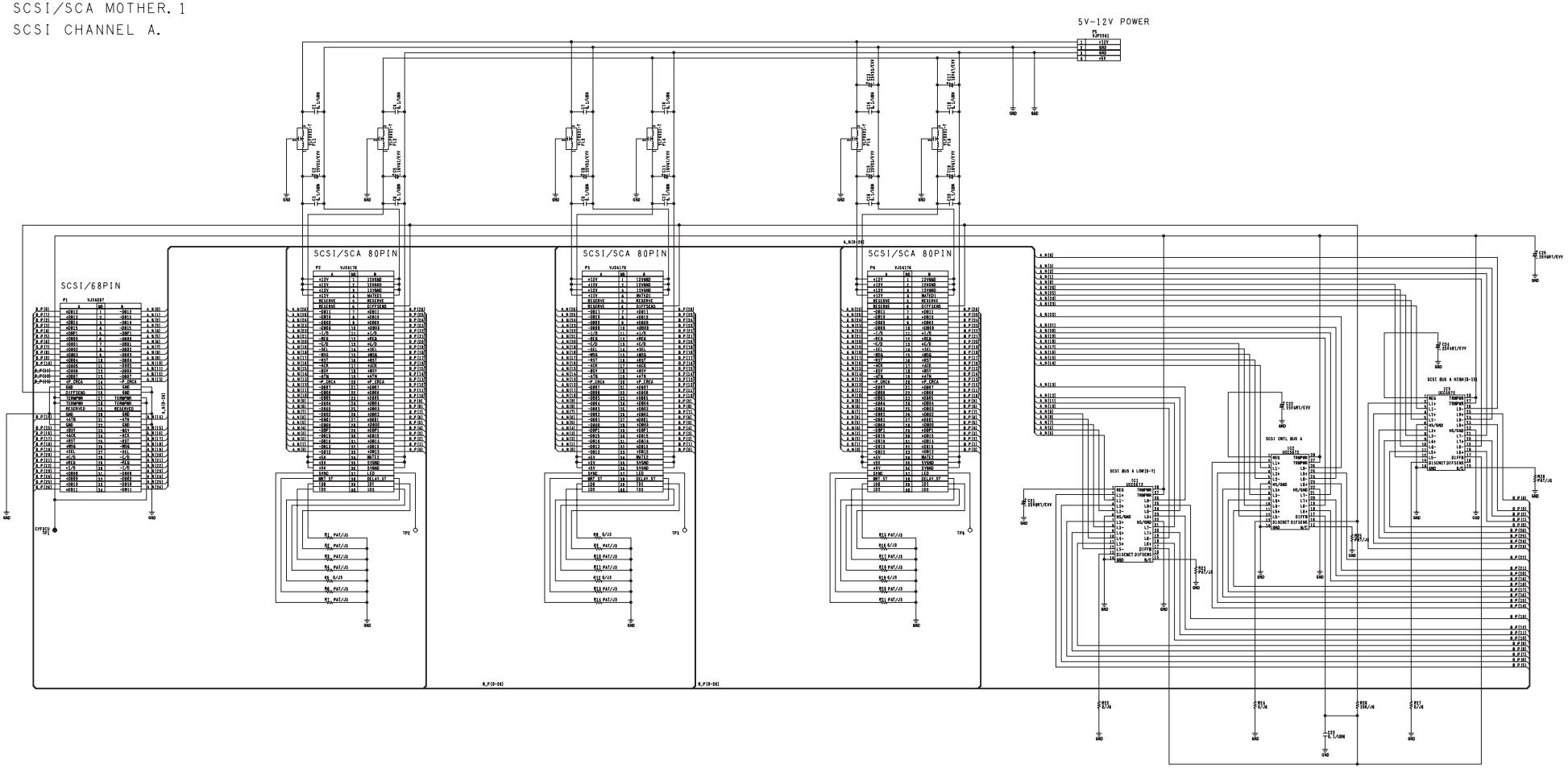

COMPONENT NAME	SCSI_MOTHER	01/03
CIRCUIT BOARD NO.		DRAWING NO.
VEP80B93		KR0P93 (1/3)
		SCM221

AJ-DE97

SCSI/SCA MOTHER.2

SCSI CHANNEL B.

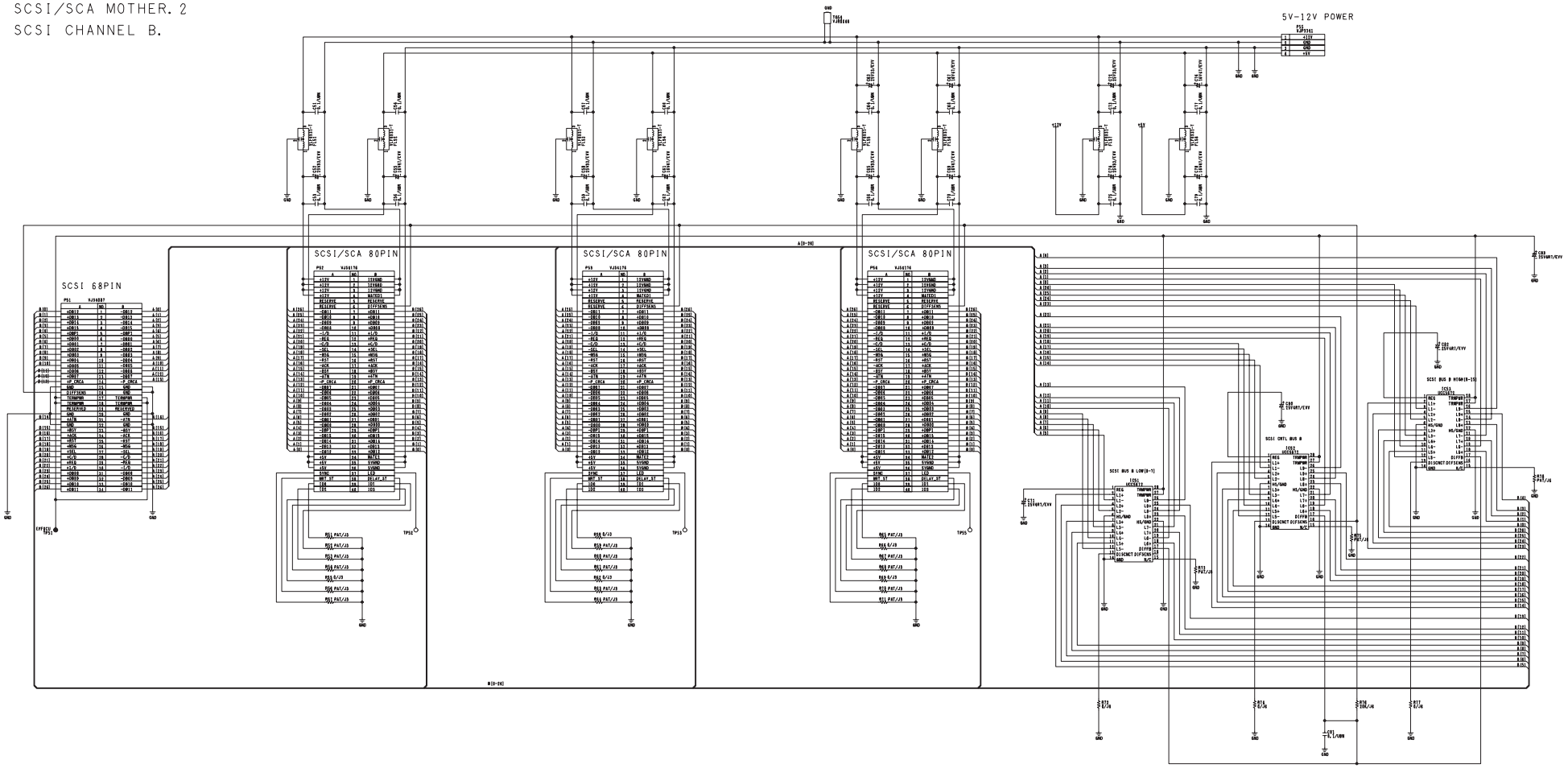

COMPONENT NAME	SCSI_MOTHER	02/03
CIRCUIT BOARD NO.		DRAWING NO.
VEP80B93		KR0P93 (2/3)
		SCM222

AJ-DE97

SCSI/SCA MOTHER.3

[FAN SENSE & CONNECTOR BLOCK]

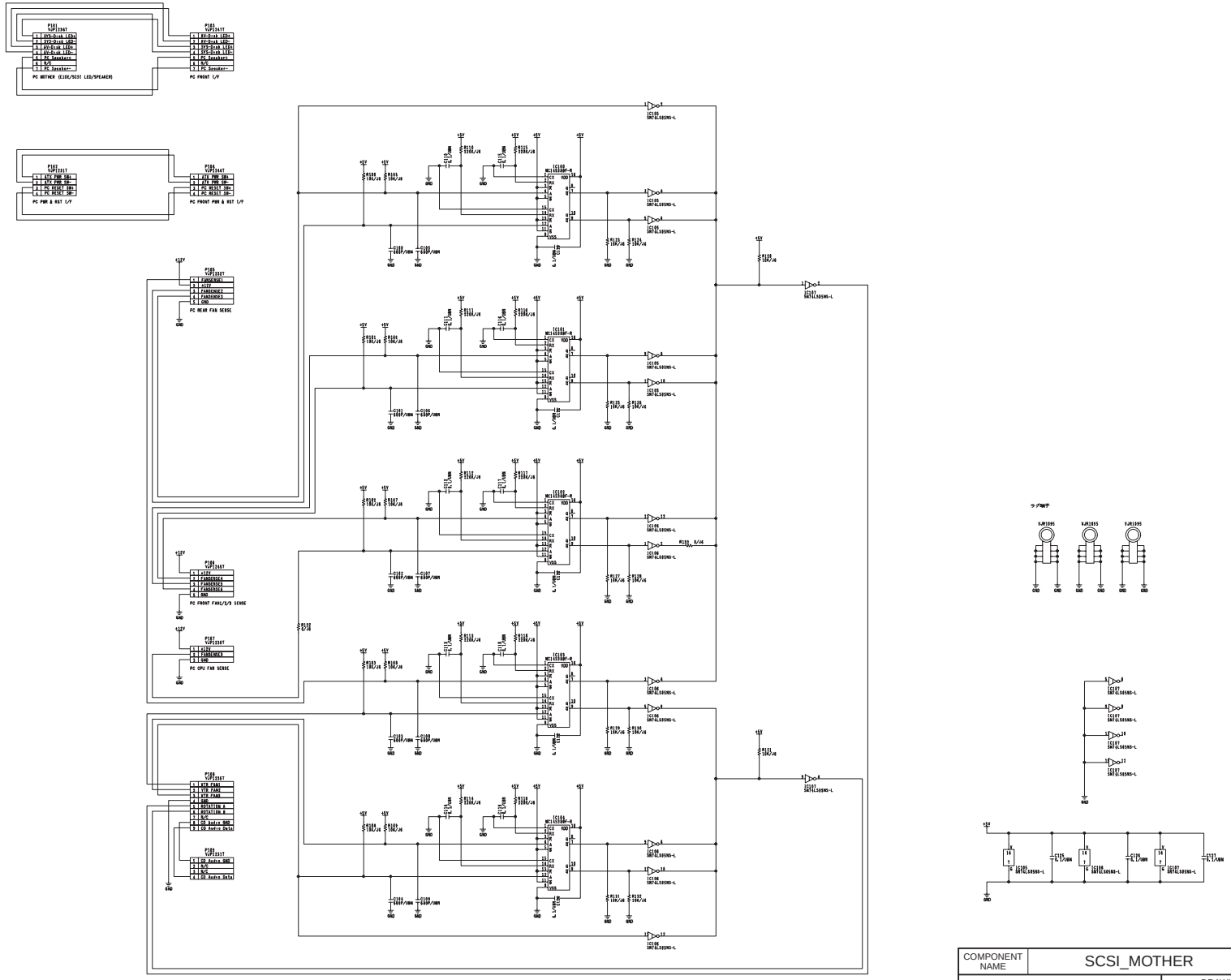

COMPONENT NAME	SCSI_MOTHER	03/03
CIRCUIT BOARD NO.		DRAWING NO.
VEP80B93		KR0P93 (3/3)
		SCM223

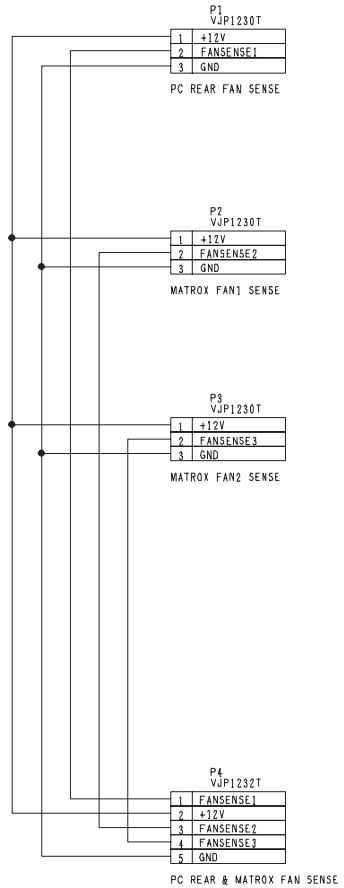

COMPONENT NAME	PC_FAN_I/F	01/01
CIRCUIT BOARD NO.	DRAWING NO.	
VEP80C17	KR0Q27 (1/1)	
	SCM224	

VTR_MOTHER

POWER [0-19] (4)
FAN_PULSE [0-8] (5)
FRONT_PANEL [0-28] (4)
PC_REMOTE [0-19] (6)

PC_REMOTE
P39 VJP3098A020

	A	NO	B	
[0]	TRANSMIT_A_IO	1	TRANSMIT_B_IO	[1]
[2]	RECEIVE_A_IO	2	RECEIVE_B_IO	[3]
[4]	GND	3	GND	[5]
[6]	CTS	4	RTS	[7]
[8]	RXD	5	TXD	[9]
[10]	DSR	6	DTR	[11]
[12]	(DCD)	7		[13]
[14]		8		[15]
[16]		9		[17]
[18]		10		[19]

EJECT/LED
P33 VJP3440A012

		NO		
[0]	+5V	1	2	CASSET_UP_L [1]
[2]	CH_COND1_LED	3	4	CH_COND2_LED [3]
[4]	CH_COND3_LED	5	6	WARNING_LED [5]
[6]	AUTO_OFF_LED	7	8	VTR_LED [7]
[8]	RESERVE_LED	9	10	EJECT_SW_L [9]
[10]	EJECT_LED	11	12	GND [11]

HEAD_PHONE
P44 VJP1233T

[12]	1	+7.5V
[13]	2	HP_SIG_R
[14]	3	HP_SIG_L
[15]	4	HP_SIG_G
[16]	5	HP_VR
[17]	6	GND

FAN_PULSE
P45 VJP1236T

	FAN_PULSE1	1	[0]
	FAN_PULSE2	2	[1]
	FAN_PULSE3	3	[2]
	GND	4	[3]
[4]	FAN_PULSE1_RET	5	[4]
[5]	FAN_PULSE2_RET	6	[5]
[6]		7	[6]
[7]	GND	8	[7]
[8]	CD_SDIN	9	[8]

FRONT_PANEL_CABLE

		NO		
[0]	+5V	1	2	+7.5V [1]
[2]	+5V	3	4	+5V [3]
[4]	FR_SERI0A	5	6	FR_SERI0B [5]
[6]	FR_SERI1A	7	8	FR_SERI1B [7]
[8]	GND	9	10	GND [9]
[10]	GND	11	12	GND [11]
[12]		13	14	[13]
[14]		15	16	[15]

FRONT_PANEL_CABLE
P32 VJP2891A016

		NO		
[0]	+5V	1	2	+7.5V [1]
[2]	+5V	3	4	+5V [3]
[4]	FR_SERI0A	5	6	FR_SERI0B [5]
[6]	FR_SERI1A	7	8	FR_SERI1B [7]
[8]	GND	9	10	GND [9]
[10]	GND	11	12	GND [11]
[12]		13	14	[13]
[14]		15	16	[15]

VTR_FRONT_FAN
P46 VJP1230T

[18]	1	+12V
[19]	2	FAN_PULSE3
[20]	3	GND

FRONT_MIC
P47 VJP1235T

[21]	1	+5V
[22]	2	GND
[23]	3	MIC_VR
[24]	4	+7.5V
[25]	5	GND
[26]	6	-7.5V
[27]	7	MIC_IN_G
[28]	8	MIC_IN_H

RF_MOTHER1
P22 VJP1233T

[0]	1	PRE_PB_L_P	
[1]	2	PRE_PB_L_N	
[2]	3	GND	
[3]	4	PRE_PB_R_P	
[4]	5	PRE_PB_R_N	
[5]	6	GND	

RF_MOTHER3
P24 VJP1236T

[13]	1	REC_L_DAT_P	
[14]	2	REC_L_DAT_N	
[15]	3	GND	
[16]	4	REC_R_DAT_P	
[17]	5	REC_R_DAT_N	
[18]	6	GND	
[19]	7	REC_CLK_P	
[20]	8	REC_CLK_N	
[21]	9	GND	

RF_MOTHER2
P23 VJP1234T

[6]	1	GND
[7]	2	PRE_RP_L_P
[8]	3	PRE_RP_L_N
[9]	4	GND
[10]	5	PRE_RP_R_P
[11]	6	PRE_RP_R_N
[12]	7	GND

RF_MOTHER4
P25 VJP1232T

	GND	1	[22]
	PB_L_ENV	2	[23]
	GND	3	[24]
	PB_R_ENV	4	[25]
	GND	5	[26]

RF_MOTHER5
P26 VJP3440A020

		NO		
[27]	NC	1	2	NC [28]
[29]	GND	3	4	GND [30]
[31]	+12V	5	6	+12V [32]
[33]	GND	7	8	GND [34]
[35]	+7.5V	9	10	+7.5V [36]
[37]	-7.5V	11	12	-7.5V [38]
[39]	GND	13	14	GND [40]
[41]	+5V	15	16	+5V [42]
[43]	-5V	17	18	-5V [44]
[45]	GND	19	20	GND [46]

RF_MOTHER6
P27 VJP3418A032

	A	NO	B	
[47]	GND	1	GND	[48]
[49]	RF_DATA	2	RF_CLK	[50]
[51]	RF_DVCPRO_H	3	REC_LD_H	[52]
[53]		4	RECI	[54]
[55]	GND	5	GND	[56]
[57]	PB_R_HSW	6	PB_L_HSW	[58]
[59]	RP_R_HSW_EQ	7	RP_L_HSW_EQ	[60]
[61]	RP_R_HSW	8	RP_L_HSW	[62]
[63]	RSV_R_HSW	9	RSV_L_HSW	[64]
[65]	DRATE1	10	DRATE0_RF	[66]
[67]	GND	11	GND	[68]
[69]	REC_R1_CTRL	12	REC_L1_CTRL	[70]
[71]	REC_R2_CTRL	13	REC_L2_CTRL	[72]
[73]	FE_R1_CTRL	14	FE_L1_CTRL	[74]
[75]	FE_R2_CTRL	15	FE_L2_CTRL	[76]
[77]	GND	16	GND	[78]

MECH_I/F_1
P28 VJP3418A080

	A	NO	B	
[0]	CAST_DOWN2_L	1	LP_MODE_L	[1]
[2]	CAST_DOWN1_L	2	THIN_TAPE_L	[3]
[4]	CASSET_MID_H	3	TAPE_SENSOR_GND	[5]
[6]	CASSET_INR_H	4	CASSET_INL_H	[7]
[8]	CASSET1_H	5	DEW_ON_H	[9]
[10]	CASSET2_H	6	DEW_GND	[11]
[12]	CASSET_DOWN_H	7	CASSET_UP_L	[13]
[14]	MECHA_POS2_L	8	MECHA_POS1_L	[15]
[16]	SAFETY_TAB	9	MECHA_POS3_L	[17]
[18]	REEL_POS2_H	10	MECHA_POS4_L	[19]
[20]	TAPE_SENSOR_ON	11	REEL_POS1_H	[21]
[22]	MIF_RESERVE2	12	FOT_INPUT	[23]
[24]	TAPE_START_L	13	TAPE_END_L	[25]
[26]	MIF_RESERVE1	14	T_TENSION	[27]
[28]	S_TENSION	15	TENSION_GND	[29]
[30]	CYLH_V+	16	CYLH_V-	[31]
[32]	CYLH1+	17	CYLH1-	[33]
[34]	CYLH2+	18	CYLH2-	[35]
[36]	CYLH3+	19	CYLH3-	[37]
[38]	TRH_V+	20	TRH_V-	[39]
[40]	TRH1+	21	TRH1-	[41]
[42]	TRH2+	22	TRH2-	[43]
[44]	TRH3+	23	TRH3-	[45]
[46]	SRH_V+	24	SRH_V-	[47]
[48]	SRH1+	25	SRH1-	[49]
[50]	SRH2+	26	SRH2-	[51]
[52]	SRH3+	27	SRH3-	[53]
[54]	CAH_V+	28	CAH_V-	[55]
[56]	CAH1+	29	CAH1-	[57]
[58]	CAH2+	30	CAH2-	[59]
[60]	CAH3+	31	CAH3-	[61]
[62]	CAP_FG_VCC	32	CAP_FG_GND	[63]
[64]	CAP_FG1_M	33	CAP_FG2_M	[65]
[66]	CYL_PG-	34	CYL_FG-	[67]
[68]	LOAD_FG	35	PRE_CTL_PRE	[69]
[70]	T_FG1_M	36	T_FG2_M	[71]
[72]	RL_FG_V	37	RL_FG_GND	[73]
[74]	S_FG1_M	38	S_FG2_M	[75]
[76]	CYL_PF_GND	39	CTL_GND	[77]
[78]	CTL_REC_CURR	40	CTL_PRE	[79]

POWER_1
P34 VJP2824B008

[0]	1	-7.5V_1
[1]	2	+7.5V_1
[2]	3	-12V_1
[3]	4	+12V_1
[4]	5	GND
[5]	6	GND
[6]	7	GND
[7]	8	GND

POWER_2
P35 VJP2824B009

[8]	1	+3V
[9]	2	GND
[10]	3	GND
[11]	4	GND
[12]	5	GND
[13]	6	-5V
[14]	7	+5V_1
[15]	8	+5V_2
[16]	9	+5V_3

POWER_3
P36 VJP2824A003

[17]	1	FAN_PULSE1
[18]	2	GND_M
[19]	3	+16V

POWER_4
P37 VJP2824A008

[0]	1	-7.5V_2
[1]	2	+7.5V_2
[2]	3	-12V_2
[3]	4	+12V_2
[4]	5	GND
[5]	6	GND
[6]	7	GND
[7]	8	GND

MECH_I/F_2
P29 VJP3081

[80]	1	GND
[81]	2	GND
[82]	3	+12V
[83]	4	-12V
[84]	5	+5V
[85]	6	LOADING
[86]	7	UNLOADING
[87]	8	S_BRAKE_OFF
[88]	9	S_BRAKE_ON
[89]	10	R_STAND_S2L
[90]	11	R_STAND_L2S
[91]	12	CLEANING_OFF
[92]	13	CLEANING_ON

MECH_I/F_3
P30 VJP3076

[93]	1	TRL_M1
[94]	2	TRL_M3
[95]	3	TRL_M2
[96]	4	F_LOAD_IN
[97]	5	F_LOAD_OUT
[98]	6	SRL_M1
[99]	7	SRL_M3
[100]	8	SRL_M2

MECH_I/F_4
P31 VJP3082

[101]	1	T_BRAKE_OFF
[102]	2	T_BRAKE_ON
[103]	3	M_STOPPER_OFF
[104]	4	M_STOPPER_ON
[105]	5	PINCH_OFF
[106]	6	PINCH_ON
[107]	7	
[108]	8	
[109]	9	CAP_M3
[110]	10	CAP_M2
[111]	11	CAP_M1
[112]	12	CYL_M3
[113]	13	CYL_M2
[114]	14	CYL_M1

ANALOG_VIDEO_IN/OUT
P40 VJP2540A040

	A	NO	B	
[0]	GND	1	GND	[1]
[2]	VIDEO1_OUT	2	GND	[3]
[4]	VIDEO2_OUT	3	GND	[5]
[6]	VIDEO3_OUT	4	GND	[7]
[8]	GND	5	GND	[9]
[10]	Y_OUT	6	GND	[11]
[12]	PB_OUT	7	GND	[13]
[14]	PR_OUT	8	GND	[15]
[16]	GND	9	GND	[17]
[18]	REF_IN	10	GND	[19]
[20]	GND	11	GND	[21]
[22]	VIDEO_IN	12	GND	[23]
[24]	GND	13	GND	[25]
[26]	Y_IN	14	GND	[27]
[28]	PB_IN	15	GND	[29]
[30]	PR_IN	16	GND	[31]
[32]	GND	17	GND	[33]
[34]	+12V	18	+12V	[35]
[36]	-12V	19	-12V	[37]
[38]	GND	20	GND	[39]

ANALOG_AUDIO_IN
P42 VJP2741A014

		NO		
[40]	CH1_IN_C	1	2	CH1_IN_H [41]
[42]	CH1_IN_G	3	4	CH2_IN_G [43]
[44]	CH2_IN_C	5	6	CH2_IN_H [45]
[46]	GND	7	8	GND [47]
[48]	CH3_IN_C	9	10	CH3_IN_H [49]
[50]	CH3_IN_G	11	12	CH4_IN_G [51]
[52]	CH4_IN_C	13	14	CH4_IN_H [53]

ANALOG_AUDIO_OUT
P43 VJP2741A022

		NO		
[54]	CH1_OUT_C	1	2	CH1_OUT_H [55]
[56]	CH1_OUT_G	3	4	CH2_OUT_G [57]
[58]	CH2_OUT_C	5	6	CH2_OUT_H [59]
[60]	GND	7	8	GND [61]
[62]	CH3_OUT_C	9	10	CH3_OUT_H [63]
[64]	CH3_OUT_G	11	12	CH4_OUT_G [65]
[66]	CH4_OUT_C	13	14	CH3_OUT_H [67]
[68]	GND	15	16	GND [69]
[70]	L_MON1_OUT_C	17	18	L_MON1_OUT_H [71]
[72]	L_MON1_OUT_G	19	20	R_MON1_OUT_G [73]
[74]	R_MON1_OUT_C	21	22	R_MON1_OUT_H [75]

DIGITAL_AUDIO_I/O
P41 VJP2741B020

		NO		
	NC	x	x	NC
	+12V_1	x	x	FAN_PULSE2
[76]	TC_IN_C	1	2	TC_IN_H [77]
[78]	GND	3	4	GND [79]
[80]	TC_OUT_C	5	6	TC_OUT_H [81]
[82]	GND	7	8	GND [83]
[84]	D_IN_DATA12N	9	10	D_IN_DATA12P [85]
[86]	D_IN_DATA12G	11	12	D_IN_DATA34G [87]
[88]	D_IN_DATA34N	13	14	D_IN_DATA34P [89]
[90]	D_OUT_DATA12N	15	16	D_OUT_DATA12P [91]
[92]	D_OUT_DATA12G	17	18	D_OUT_DATA34G [93]
[94]	D_OUT_DATA34N	19	20	D_OUT_DATA34P [95]

V_REAR_FAN
P38 VJP1243T

	+12V	1
	FAN_PULSE2	2
	GND	3

[96] [97] [98]

(4) R_PANEL_1 [0-98]

RF_MOTHER [0-78] (2)
MECH_IF [0-114] (3)

COMPONENT NAME	INTERCONNECT(VTR_MOTHER)	01/07
CIRCUIT BOARD NO.		DRAWING NO.
VEP---------		KR9H50 (1/7)
		SCM225

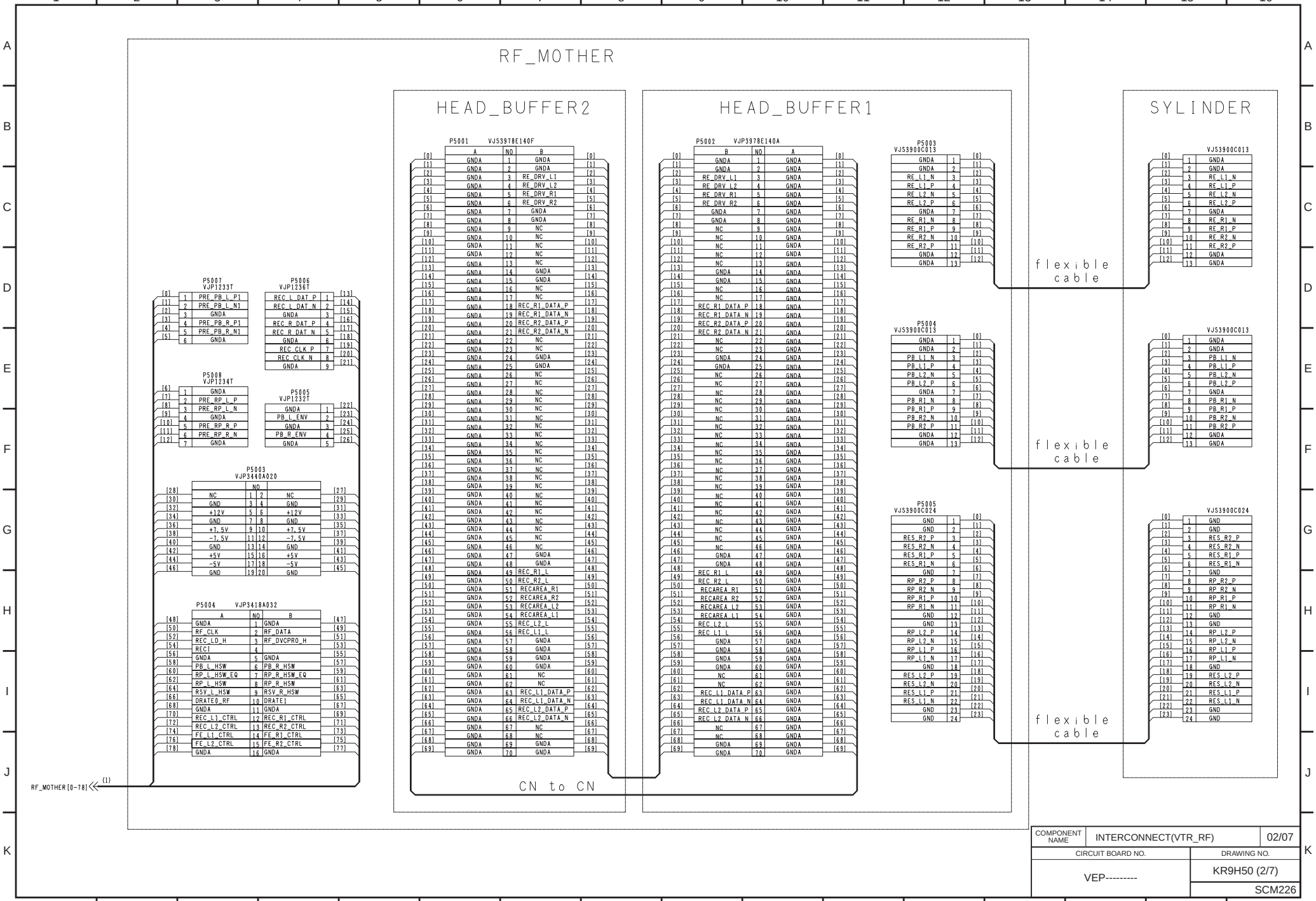

COMPONENT NAME	INTERCONNECT(VTR_RF)	02/07
CIRCUIT BOARD NO.		DRAWING NO.
VEP---------		KR9H50 (2/7)
		SCM226

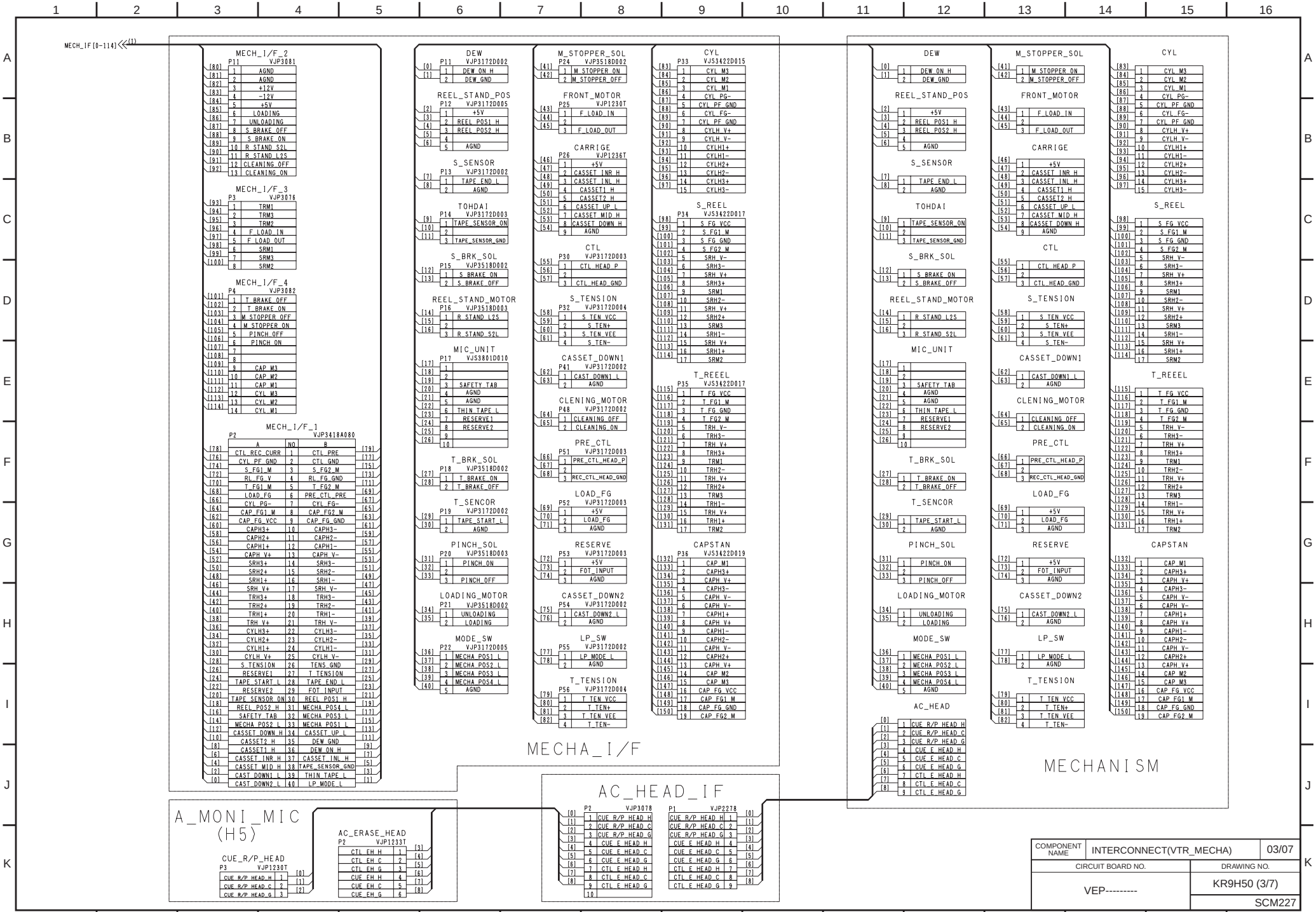
MECH_IF[0-114]
MECH_I/F_2
P11 VJP3081
MECH_I/F_3
P3 VJP3076
MECH_I/F_4
P4 VJP3082
MECH_I/F_1
P2 VJP3418A080
DEW
REEL_STAND_POS
S_SENSOR
TOHDAI
S_BRK_SOL
REEL_STAND_MOTOR
MIC_UNIT
T_BRK_SOL
T_SENCOR
PINCH_SOL
LOADING_MOTOR
MODE_SW
M_STOPPER_SOL
FRONT_MOTOR
CARRIGE
CTL
S_TENSION
CASSET_DOWN1
CLENING_MOTOR
PRE_CTL
LOAD_FG
RESERVE
CASSET_DOWN2
LP_SW
T_TENSION
CYL
S_REEL
T_REEL
CAPSTAN
MECHA_I/F
AC_HEAD
MECHANISM
A_MONI_MIC
(H5)
CUE_R/P_HEAD
P3 VJP1230T
AC_ERASE_HEAD
P2 VJP1233T
AC_HEAD_IF
P2 VJP3078
P1 VJP2278
COMPONENT NAME
INTERCONNECT(VTR_MECHA)
03/07
CIRCUIT BOARD NO.
DRAWING NO.
VEP---------
KR9H50 (3/7)
SCM227

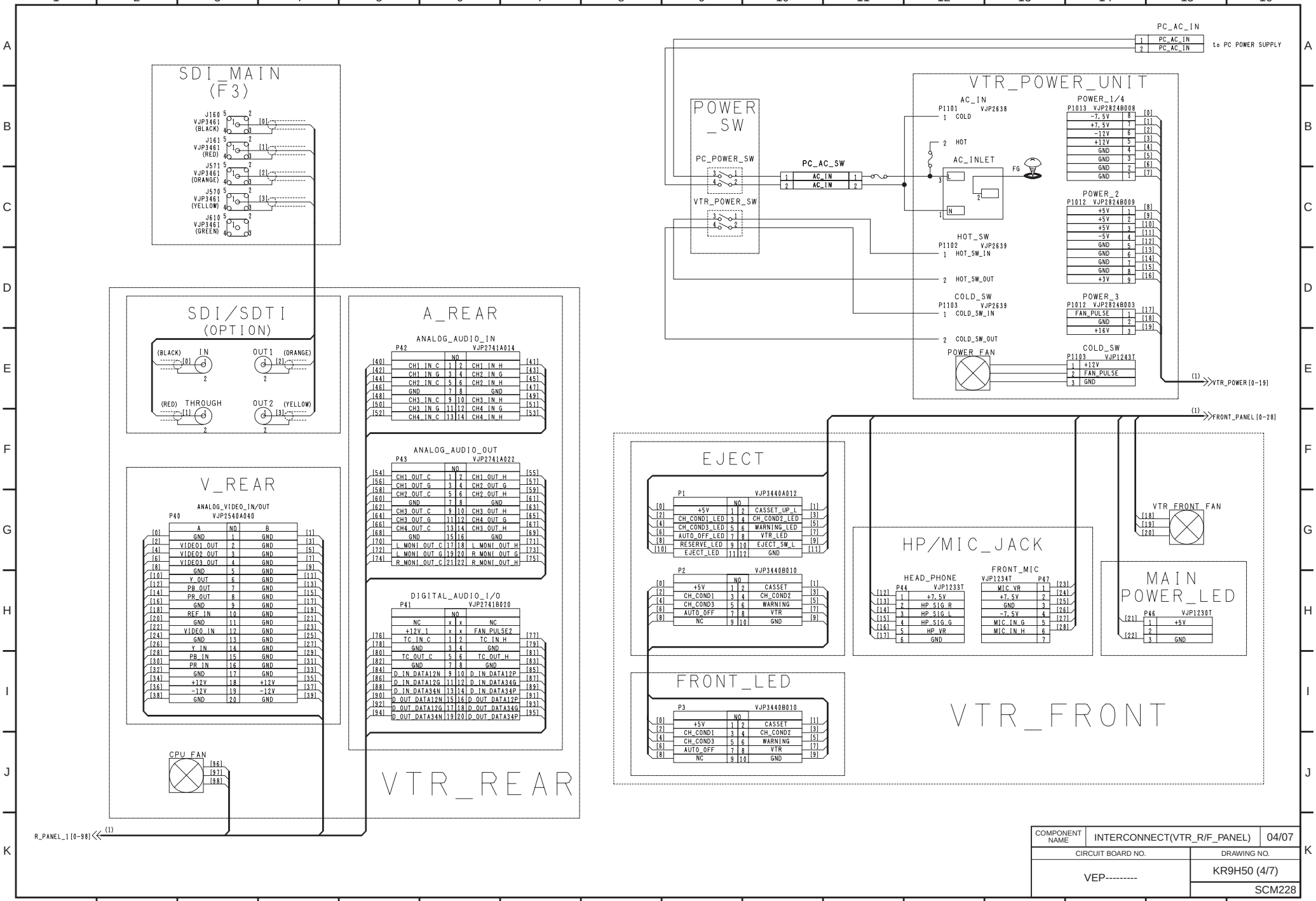

COMPONENT NAME	INTERCONNECT(VTR_R/F_PANEL)	04/07
CIRCUIT BOARD NO.		DRAWING NO.
VEP---------		KR9H50 (4/7)
		SCM228

SCSI_MOTHER

SCSI CHANNEL A.

SCSI DISK (ID0)

P2 VJS4176

A	NO	B
+12V	1	12VGND
+12V	2	12VGND
+12V	3	12VGND
+12V	4	MATED1
RESERVE	5	RESERVE
RESERVE	6	DIFFSENS
-DB11	7	+DB11
-DB10	8	+DB10
-DB09	9	+DB09
-DB08	10	+DB08
-I/O	11	+I/O
-REQ	12	+REQ
-C/D	13	+C/D
-SEL	14	+SEL
-MSG	15	+MSG
-RST	16	+RST
-ACK	17	+ACK
-BSY	18	+BSY
-ATN	19	+ATN
-P_CRCA	20	+P_CRCA
-DB07	21	+DB07
-DB06	22	+DB06
-DB05	23	+DB05
-DB04	24	+DB04
-DB03	25	+DB03
-DB02	26	+DB02
-DB01	27	+DB01
-DB00	28	+DB00
-DBP1	29	+DBP1
-DB15	30	+DB15
-DB14	31	+DB14
-DB13	32	+DB13
-DB12	33	+DB12
+5V	34	MATE2
+5V	35	5VGND
+5V	36	5VGND
SYNC	37	LED
MRT_ST	38	DELAY_ST
IDO	39	ID1
ID2	40	ID3

SCSI DISK (ID1)

P3 VJS4176

A	NO	B
+12V	1	12VGND
+12V	2	12VGND
+12V	3	12VGND
+12V	4	MATED1
RESERVE	5	RESERVE
RESERVE	6	DIFFSENS
-DB11	7	+DB11
-DB10	8	+DB10
-DB09	9	+DB09
-DB08	10	+DB08
-I/O	11	+I/O
-REQ	12	+REQ
-C/D	13	+C/D
-SEL	14	+SEL
-MSG	15	+MSG
-RST	16	+RST
-ACK	17	+ACK
-BSY	18	+BSY
-ATN	19	+ATN
-P_CRCA	20	+P_CRCA
-DB07	21	+DB07
-DB06	22	+DB06
-DB05	23	+DB05
-DB04	24	+DB04
-DB03	25	+DB03
-DB02	26	+DB02
-DB01	27	+DB01
-DB00	28	+DB00
-DBP1	29	+DBP1
-DB15	30	+DB15
-DB14	31	+DB14
-DB13	32	+DB13
-DB12	33	+DB12
+5V	34	MATE2
+5V	35	5VGND
+5V	36	5VGND
SYNC	37	LED
MRT_ST	38	DELAY_ST
IDO	39	ID1
ID2	40	ID3

SCSI DISK (ID2)

P4 VJS4176

A	NO	B
+12V	1	12VGND
+12V	2	12VGND
+12V	3	12VGND
+12V	4	MATED1
RESERVE	5	RESERVE
RESERVE	6	DIFFSENS
-DB11	7	+DB11
-DB10	8	+DB10
-DB09	9	+DB09
-DB08	10	+DB08
-I/O	11	+I/O
-REQ	12	+REQ
-C/D	13	+C/D
-SEL	14	+SEL
-MSG	15	+MSG
-RST	16	+RST
-ACK	17	+ACK
-BSY	18	+BSY
-ATN	19	+ATN
-P_CRCA	20	+P_CRCA
-DB07	21	+DB07
-DB06	22	+DB06
-DB05	23	+DB05
-DB04	24	+DB04
-DB03	25	+DB03
-DB02	26	+DB02
-DB01	27	+DB01
-DB00	28	+DB00
-DBP1	29	+DBP1
-DB15	30	+DB15
-DB14	31	+DB14
-DB13	32	+DB13
-DB12	33	+DB12
+5V	34	MATE2
+5V	35	5VGND
+5V	36	5VGND
SYNC	37	LED
MRT_ST	38	DELAY_ST
IDO	39	ID1
ID2	40	ID3

SCSI CHANNEL B.

SCSI DISK (ID0)

P52 VJS4176

A	NO	B
+12V	1	12VGND
+12V	2	12VGND
+12V	3	12VGND
+12V	4	MATED1
RESERVE	5	RESERVE
RESERVE	6	DIFFSENS
-DB11	7	+DB11
-DB10	8	+DB10
-DB09	9	+DB09
-DB08	10	+DB08
-I/O	11	+I/O
-REQ	12	+REQ
-C/D	13	+C/D
-SEL	14	+SEL
-MSG	15	+MSG
-RST	16	+RST
-ACK	17	+ACK
-BSY	18	+BSY
-ATN	19	+ATN
-P_CRCA	20	+P_CRCA
-DB07	21	+DB07
-DB06	22	+DB06
-DB05	23	+DB05
-DB04	24	+DB04
-DB03	25	+DB03
-DB02	26	+DB02
-DB01	27	+DB01
-DB00	28	+DB00
-DBP1	29	+DBP1
-DB15	30	+DB15
-DB14	31	+DB14
-DB13	32	+DB13
-DB12	33	+DB12
+5V	34	MATE2
+5V	35	5VGND
+5V	36	5VGND
SYNC	37	LED
MRT_ST	38	DELAY_ST
IDO	39	ID1
ID2	40	ID3

SCSI DISK (ID1)

P53 VJS4176

A	NO	B
+12V	1	12VGND
+12V	2	12VGND
+12V	3	12VGND
+12V	4	MATED1
RESERVE	5	RESERVE
RESERVE	6	DIFFSENS
-DB11	7	+DB11
-DB10	8	+DB10
-DB09	9	+DB09
-DB08	10	+DB08
-I/O	11	+I/O
-REQ	12	+REQ
-C/D	13	+C/D
-SEL	14	+SEL
-MSG	15	+MSG
-RST	16	+RST
-ACK	17	+ACK
-BSY	18	+BSY
-ATN	19	+ATN
-P_CRCA	20	+P_CRCA
-DB07	21	+DB07
-DB06	22	+DB06
-DB05	23	+DB05
-DB04	24	+DB04
-DB03	25	+DB03
-DB02	26	+DB02
-DB01	27	+DB01
-DB00	28	+DB00
-DBP1	29	+DBP1
-DB15	30	+DB15
-DB14	31	+DB14
-DB13	32	+DB13
-DB12	33	+DB12
+5V	34	MATE2
+5V	35	5VGND
+5V	36	5VGND
SYNC	37	LED
MRT_ST	38	DELAY_ST
IDO	39	ID1
ID2	40	ID3

SCSI DISK (ID2)

P54 VJS4176

A	NO	B
+12V	1	12VGND
+12V	2	12VGND
+12V	3	12VGND
+12V	4	MATED1
RESERVE	5	RESERVE
RESERVE	6	DIFFSENS
-DB11	7	+DB11
-DB10	8	+DB10
-DB09	9	+DB09
-DB08	10	+DB08
-I/O	11	+I/O
-REQ	12	+REQ
-C/D	13	+C/D
-SEL	14	+SEL
-MSG	15	+MSG
-RST	16	+RST
-ACK	17	+ACK
-BSY	18	+BSY
-ATN	19	+ATN
-P_CRCA	20	+P_CRCA
-DB07	21	+DB07
-DB06	22	+DB06
-DB05	23	+DB05
-DB04	24	+DB04
-DB03	25	+DB03
-DB02	26	+DB02
-DB01	27	+DB01
-DB00	28	+DB00
-DBP1	29	+DBP1
-DB15	30	+DB15
-DB14	31	+DB14
-DB13	32	+DB13
-DB12	33	+DB12
	34	MATE2
	35	5VGND
	36	5VGND
SYNC	37	LED
MRT_ST	38	DELAY_ST
	39	ID1
	40	ID3

SCSI A

P1 VJS4087

	A	NO	B	
[0]	+DB12	1	-DB12	[1]
[2]	+DB13	2	-DB13	[3]
[4]	+DB14	3	-DB14	[5]
[6]	+DB15	4	-DB15	[7]
[8]	+DBP1	5	-DBP1	[9]
[10]	+DB00	6	-DB00	[11]
[12]	+DB01	7	-DB01	[13]
[14]	+DB02	8	-DB02	[15]
[16]	+DB03	9	-DB03	[17]
[18]	+DB04	10	-DB04	[19]
[20]	+DB05	11	-DB05	[21]
[22]	+DB06	12	-DB06	[23]
[24]	+DB07	13	-DB07	[25]
[26]	+P_CRCA	14	-P_CRCA	[27]
[28]	GND	15	GND	[29]
[30]	DIFFSENS	16	GND	[31]
[32]	TERMPWR	17	TERMPWR	[33]
[34]	TERMPWR	18	TERMPWR	[35]
[36]	RESERVED	19	RESERVED	[37]
[38]	GND	20	GND	[39]
[40]	+ATN	21	-ATN	[41]
[42]	GND	22	GND	[43]
[44]	+BSY	23	-BSY	[45]
[46]	+ACK	24	-ACK	[47]
[48]	+RST	25	-RST	[49]
[50]	+MSG	26	-MSG	[51]
[52]	+SEL	27	-SEL	[53]
[54]	+C/D	28	-C/D	[55]
[56]	+REQ	29	-REQ	[57]
[58]	+I/O	30	-I/O	[59]
[60]	+DB08	31	-DB08	[61]
[62]	+DB09	32	-DB09	[63]
[64]	+DB10	33	-DB10	[65]
[66]	+DB11	34	-DB11	[67]

SCSI_POWER_A

P5 VJP3341

+12V	1	[0] [1]
GND	2	[2]
GND	3	[3]
+5V	4	

SCSI_POWER_B

P55 VJP3341

+12V	1	[0] [1]
GND	2	[2]
GND	3	[3]
+5V	4	

SCSI B

P51 VJS4087

	A	NO	B	
[0]	+DB12	1	-DB12	[1]
[2]	+DB13	2	-DB13	[3]
[4]	+DB14	3	-DB14	[5]
[6]	+DB15	4	-DB15	[7]
[8]	+DBP1	5	-DBP1	[9]
[10]	+DB00	6	-DB00	[11]
[12]	+DB01	7	-DB01	[13]
[14]	+DB02	8	-DB02	[15]
[16]	+DB03	9	-DB03	[17]
[18]	+DB04	10	-DB04	[19]
[20]	+DB05	11	-DB05	[21]
[22]	+DB06	12	-DB06	[23]
[24]	+DB07	13	-DB07	[25]
[26]	+P_CRCA	14	-P_CRCA	[27]
[28]	GND	15	GND	[29]
[30]	DIFFSENS	16	GND	[31]
[32]	TERMPWR	17	TERMPWR	[33]
[34]	TERMPWR	18	TERMPWR	[35]
[36]	RESERVED	19	RESERVED	[37]
[38]	GND	20	GND	[39]
[40]	+ATN	21	-ATN	[41]
[42]	GND	22	GND	[43]
[44]	+BSY	23	-BSY	[45]
[46]	+ACK	24	-ACK	[47]
[48]	+RST	25	-RST	[49]
[50]	+MSG	26	-MSG	[51]
[52]	+SEL	27	-SEL	[53]
[54]	+C/D	28	-C/D	[55]
[56]	+REQ	29	-REQ	[57]
[58]	+I/O	30	-I/O	[59]
[60]	+DB08	31	-DB08	[61]
[62]	+DB09	32	-DB09	[63]
[64]	+DB10	33	-DB10	[65]
[66]	+DB11	34	-DB11	[67]

PC_CPU_FAN_SENSE

P107 VJP1230T

[10]	1	+12V
[11]	2	FANSENSE0
[12]	3	GND

PC_FRONT_I/F

P107 VJP1247T

	AV-Disk LED+	1	[0] [1]
	AV-Disk LED-	2	[2]
	SYS-Disk LED+	3	[3]
	SYS-Disk LED-	4	[4]
	PC Speaker+	5	[5]
	N/C	6	[6]
	PC Speaker-	7	

PC_FRONT_FAN

P107 VJP1245T

	+12V	1	[7]
	FANSENSE4	2	[8]
	FANSENSE5	3	[9]
	FANSENSE6	4	[10]
	GND	5	[11]

LED/SPEAKER

P107 VJP1234T

[0]	1	SYS-Disk LED+
[1]	2	SYS-Disk LED-
[2]	3	AV-Disk LED+
[3]	4	AV-Disk LED-
[4]	5	PC Speaker+
	6	N/C
[5]	7	PC Speaker-

PC_PWR/RST_SW

P107 VJP1244T

	ATX PWR SW+	1	[0] [1]
	ATX PWR SW-	2	[2]
	PC RESET SW+	3	[3]
	PC RESET SW-	4	

PC_PWR&RST_I/F

P107 VJP1231T

[6]	1	ATX PWR SW+
[7]	2	ATX PWR SW-
[8]	3	PC RESET SW+
[9]	4	PC RESET SW-

PC_FAN_I/F

P105 VJP1232T

	FANSENSE1	1	[0] [1]
	+12V	2	[2]
	FANSENSE2	3	[3]
	FANSENSE3	4	[4]
	GND	5	

FAN_PULSE

P108 VJP1236T

[0]	1	VTR FAN1
[1]	2	VTR FAN2
[2]	3	VTR FAN3
[3]	4	GND
[4]	5	ROTATION A
[5]	6	ROTATION B
[6]	7	N/C
[7]	8	CD Audio GND
[8]	9	CD Audio Data

CD_DATA

P109 VJP1231T

[0]	1	CD Audio GND
	2	N/C
	3	N/C
[1]	4	CD Audio Data

PC FRONT PANEL

FAN I/F

PC_FRONT_I/F P1 VJP1247T

[0]	1	AV-Disk LED+
[1]	2	AV-Disk LED-
[2]	3	SYS-Disk LED+
[3]	4	SYS-Disk LED-
[4]	5	PC Speaker+
[5]	6	N/C
[6]	7	PC Speaker-

PC_FRONT_FAN P2 VJP1245T

[7]	1	+12V
[8]	2	FANSENSE4
[9]	3	FANSENSE5
[10]	4	FANSENSE6
[11]	5	GND

PC_SPEAKER P3 VJP1243T

	SP+	1
		2
	SP-	3

SPEAKER

PC_FRONT_FAN1 P4 VJP1230T

	+12V	1
	FANSENSE1	2
	GND	3

PC FRONT FAN1

PC_FRONT_FAN2 P5 VJP1230T

	+12V	1
	FANSENSE2	2
	GND	3

PC FRONT FAN2

PC_FRONT_FAN3 P6 VJP1230T

	+12V	1
	FANSENSE3	2
	GND	3

PC FRONT FAN3

PC POWER SW

PC_PWR_SW P107 VJP1230T

[0]	1	ATX PWR SW+
	2	
[1]	3	ATX PWR SW-

RESET SW

PC_RST_SW P107 VJP1230T

[2]	1	PC RESET SW+
	2	
[3]	3	PC RESET SW-

PC FAN IF

PC_FAN_I/F P4 VJP1232T

[0]	1	FANSENSE3
[1]	2	+12V
[2]	3	FANSENSE2
[3]	4	FANSENSE1
[4]	5	GND

PC_REAR_FAN P1 VJP1230T

	+12V	1
	FANSENSE1	2
	GND	3

PC REAR FAN

PC_REAR_FAN P2 VJP1230T

	+12V	1
	FANSENSE2	2
	GND	3

MATROX FAN1

PC_REAR_FAN P3 VJP1230T

	+12V	1
	FANSENSE3	2
	GND	3

MATROX FAN2

(6) >> SCSI_B [0-67]
(6) >> SCSI_A [0-67]
(7) >> PC_POWER_1 [0-3]
(7) >> PC_POWER_2 [0-3]
(6) >> CPU_IF [0-12]
(7) >> CD_DATA [0-1]
(1) >> FAN_PULSE [0-8]

COMPONENT NAME	INTERCONNECT(SCSI_MOTHER)	05/07
CIRCUIT BOARD NO.		DRAWING NO.
VEP---------		KR9H50 (5/7)
		SCM229

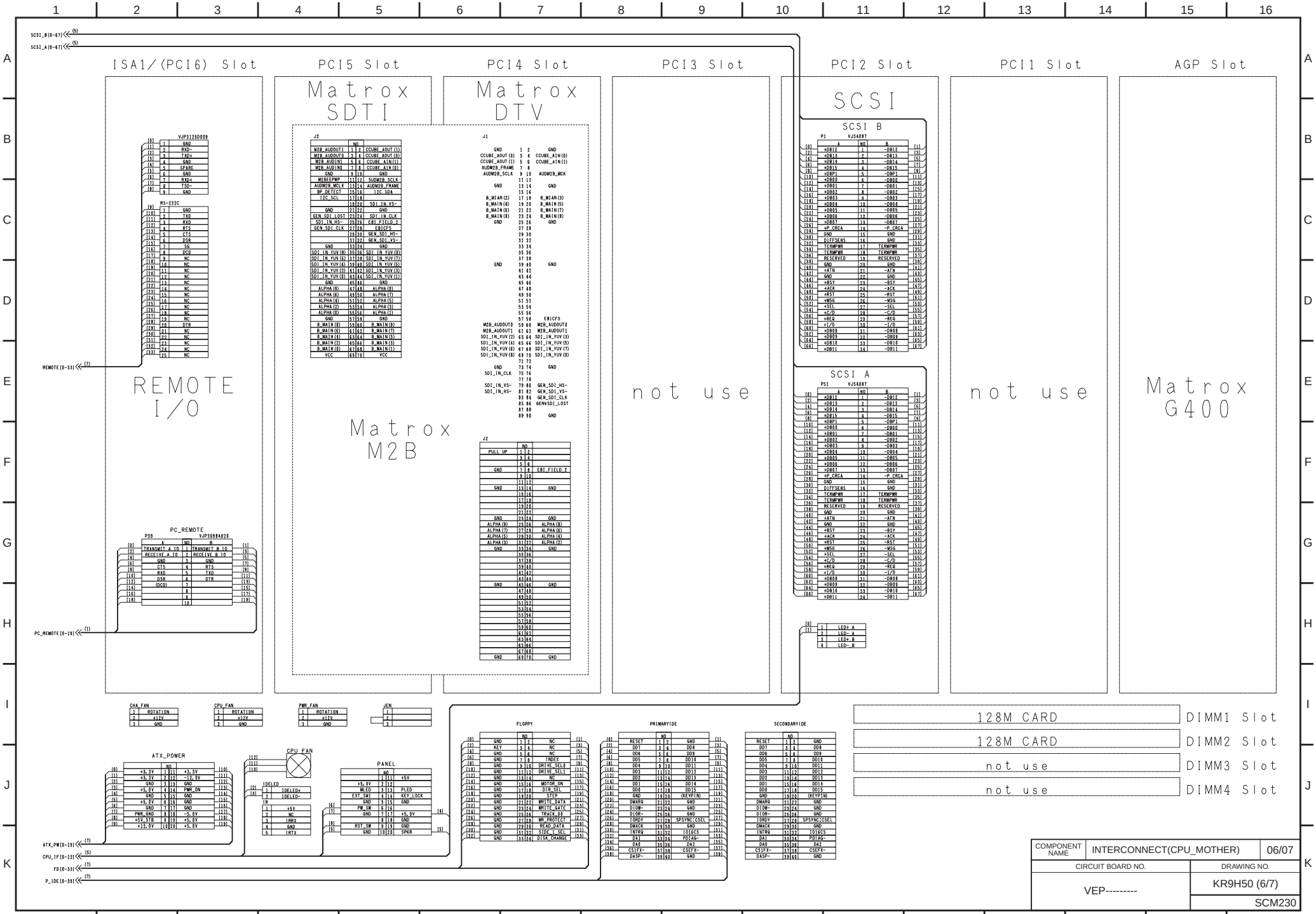
ISA1/(PCI6) Slot
REMOTE I/O
VJP3125D009
RS-232C
PC_REMOTE
VJP3098A028
PCI5 Slot
Matrox SDTI
Matrox M2B
PCI4 Slot
Matrox DTV
PCI3 Slot
not use
PCI2 Slot
SCSI
SCSI B
VJ54087
SCSI A
VJ54087
PCI1 Slot
not use
AGP Slot
Matrox G400
CHA_FAN
CPU_FAN
PWR_FAN
JEN
ATX_POWER
CPU FAN
PANEL
FLOPPY
PRIMARYIDE
SECONDARYIDE
128M CARD
DIMM1 Slot
128M CARD
DIMM2 Slot
not use
DIMM3 Slot
not use
DIMM4 Slot
COMPONENT NAME
INTERCONNECT(CPU_MOTHER)
06/07
CIRCUIT BOARD NO.
DRAWING NO.
VEP---------
KR9H50 (6/7)
SCM230

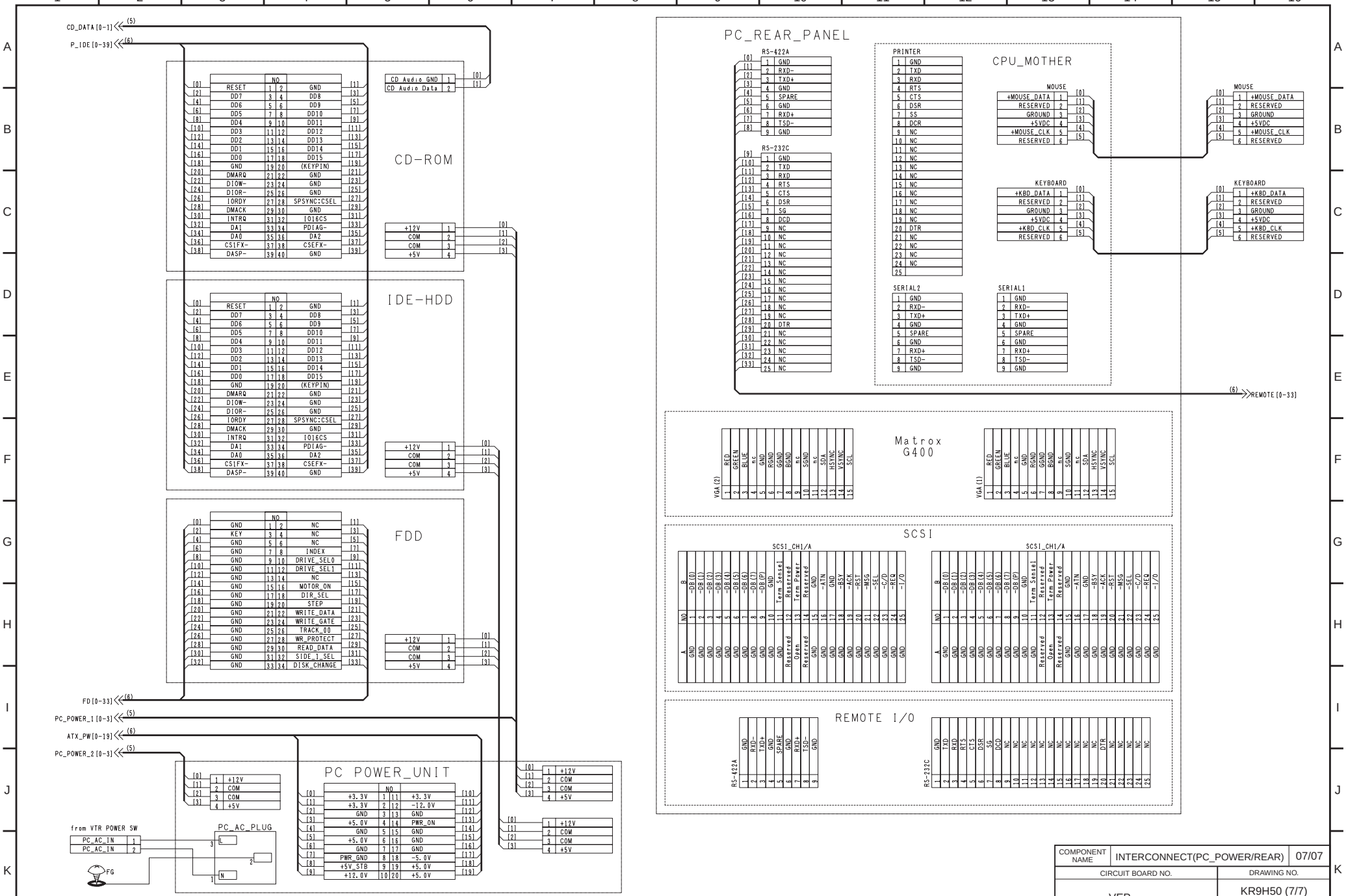

COMPONENT NAME	INTERCONNECT(PC_POWER/REAR)	07/07
CIRCUIT BOARD NO.		DRAWING NO.
VEP---------		KR9H50 (7/7)
		SCM231

SECTION 7

CIRCUIT BOARD DIAGRAMS

NOTE:
BE SURE TO MAKE YOUR ORDERS OF REPLACEMENT PARTS ACCORDING TO PARTS LIST, SECTION8

CAUTION

THE ▭ MARK INDICATES THE PRIMARY CIRCUIT TO DISTINGUISH THE PRIMARY FROM THE SECONDARY CIRCUIT.
PAY ATTENTION NOT TO RECEIVE AN ELECTRIC SHOCK DURING REPAIR AND SERVICE OF THE PRODUCTS.

IMPORTANT SAFETY NOTICE:
COMPONENTS IDENTIFIED WITH THE MARK ⚠ HAVE THE SPECIAL CHARACTERISTICS FOR SAFETY.
WHEN REPLACING ANY OF THESE COMPONENTS, USE ONLY THE SAME TYPE.

CONTENTS

F1:SERVO P.C.BOARD (VEP82230C) CBA-1
F2:SYSCON P.C.BOARD (VEP86294C) CBA-4
F4:REC PB P.C.BOARD (VEP83534A) CBA-7
F5:V OUT P.C.BOARD (VEP83494A) CBA-11
F5 SUB:422 DA SUB P.C.BOARD (VEP83385B) CBA-13
F6:A PROC P.C.BOARD (VEP84343A) CBA-15
F6 SUB:A JOG P.C.BOARD (VEP84360A) CBA-17
F7:V IN P.C.BOARD (VEP83409C) CBA-18
H1:EQ1 P.C.BOARD (VEP85184C) CBA-20
H2:EQ2 P.C.BOARD (VEP85184D) CBA-20
H3:EQ MAIN P.C.BOARD (VEP85185B) CBA-22
H5:A MONI MIC P.C.BOARD (VEP84366A) CBA-24
H6:A DA P.C.BOARD (VEP84365A) CBA-29
H7:A AD P.C.BOARD (VEP84364A) CBA-32

HEAD BUFFER1 P.C.BOARD (VEP85189A) CBA-34
HEAD BUFFER2 P.C.BOARD (VEP85190A) CBA-35
RF MOTHER P.C.BOARD (VEP85192A)..... CBA-37
VTR MOTHER P.C.BOARD (VEP80B76A)..... CBA-38
VIDEO REAR P.C.BOARD (VEP83533A)..... CBA-40
AUDIO REAR P.C.BOARD (VEP84362B) CBA-41
HP/MIC JACK P.C. BOARD (VEP84363A)..... CBA-43
POWER1 P.C. BOARD (VEP81183A) CBA-44
POWER2 P.C.BOARD (VEP81184A) CBA-45
AC HEAD IF P.C.BOARD (VEP80B77A)..... CBA-46
MECHA IF P.C.BOARD (VEP82231A)..... CBA-47
EJECT P.C.BOARD (VEP80A50A)..... CBA-48
FRONT LED P.C.BOARD (VEP80A51A)..... CBA-48
MAIN POWER LED P.C.BOARD (VEP80A72A)..... CBA-48
RESET SW P.C.BOARD (VEP80A62A)..... CBA-49
PC POWER SW P.C.BOARD (VEP80A70A) CBA-49
FAN I/F P.C.BOARD (VEP80A63A)..... CBA-49
SCSI MOTHER P.C.BOARD (VEP80B93A)..... CBA-50
PC FAN I/F P.C.BOARD (VEP80C17A)..... CBA-52

F1: SERVO P.C. BOARD (VEP82230C)

REF	LOC	REF	LOC	REF	LOC	REF	LOC	REF	LOC	REF	LOC	REF	LOC
IC100	F3	IC301	H3	IC505	J3	IC651	C1	Q601	K4	Q757	B2	QR7	E4
IC101	F3	IC306	H3	IC506	G4	IC652	D1	Q602	B2	Q851	B4	QR750	C1
IC102	D3	IC307	H2	IC507	G4	IC653	D2	Q603	B2	Q852	B4	QR751	C1
IC150	E3	IC308	J3	IC508	E1	IC751	C1	Q651	B2	Q853	A2	QR850	B4
IC151	E3	IC309	J3	IC509	E2	IC752	C1	Q652	B2	QR1	F4	QR900	B4
IC152	D2	IC310	J1	IC511	D1	IC850	B3	Q653	B2	QR2	F4	QR901	A4
IC200	D3	IC400	H4	IC513	D1	Q1	F4	Q654	B3	QR3	F4	QR902	A4
IC201	E3	IC401	H4	IC603	F4	Q2	G4	Q657	C3	QR4	F4		
IC250	D4	IC451	E2	IC604	J4	Q3	F3	Q658	C2	QR500	H1		
IC251	D4	IC501	H3	IC605	J4	Q4	G4	Q751	B1	QR501	H1		
IC252	D4	IC502	H4	IC606	J4	Q5	F4	Q752	B1	QR502	G1		
IC254	D4	IC503	G3	IC608	H4	Q6	F4	Q753	B1	QR650	B1		
IC255	D4	IC504	H3	IC610	G3	Q600	K4	Q754	B1	QR651	B1		

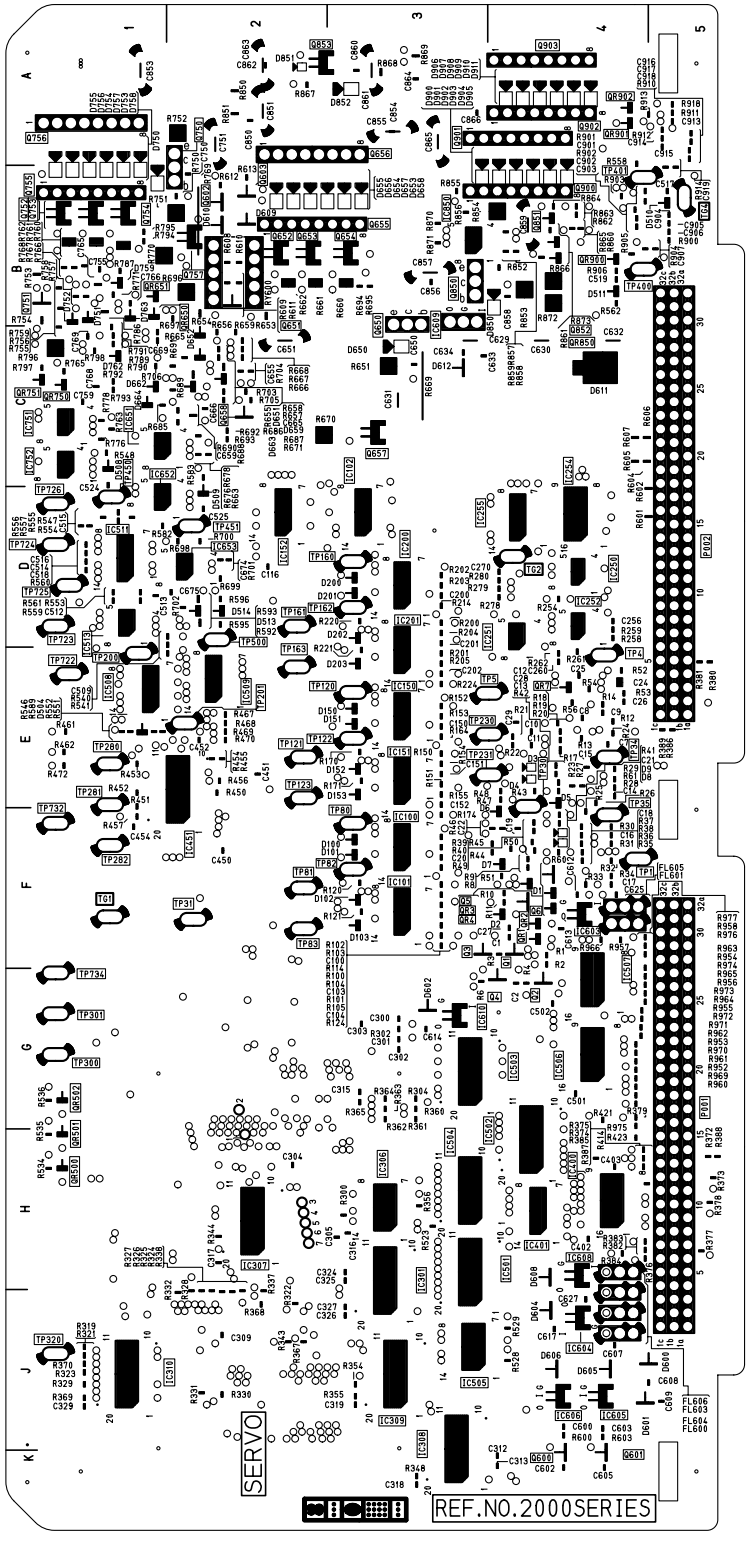

(FOIL SIDE)

F1: SERVO P.C. BOARD (VEP82230C)

REF	LOC	REF	LOC	REF	LOC	REF	LOC	REF	LOC	REF	LOC	REF	LOC	REF	LOC	REF	LOC
IC1	F4	IC6	F4	P301	J2	QR100	F2	QR203	D3	TP122	E3	TP282	F1	TP400	B4	TP723	D1
IC1001	D1	IC600	J5	P302	H1	QR1001	D1	QR204	E3	TP123	E2	TP30	E4	TP401	B4	TP724	D1
IC103	D2	IC601	J5	P450	E1	QR101	F2	QR400	H4	TP160	D3	TP300	G1	TP450	D1	TP725	D1
IC2	E4	IC609	B3	Q650	B3	QR102	F3	QR401	H4	TP161	D2	TP301	G1	TP451	D2	TP726	D1
IC253	D4	IC650	C2	Q655	B2	QR103	F3	QR5	E3	TP162	D3	TP302	G2	TP455	F2	TP732	F1
IC3	E4	IC7	E4	Q656	A2	QR104	F3	QR6	F3	TP163	E2	TP303	K4	TP5	E3	TP734	G1
IC302	G3	IC750	B1	Q750	B2	QR150	E2	TG1	F1	TP200	E1	TP304	J4	TP500	D2	TP80	F3
IC303	H3	IC900	B4	Q755	B1	QR151	E2	TG2	D4	TP201	E2	TP305	G2	TP501	D2	TP81	F2
IC304	H3	IC901	A5	Q756	A1	QR152	E3	TG3	C2	TP230	E3	TP307	J4	TP502	D1	TP82	F3
IC305	G3	IP300	H2	Q850	B3	QR153	E3	TG4	B5	TP231	E3	TP31	F2	TP503	D2	TP83	F2
IC4	E4	IP450	E2	Q900	B3	QR154	E3	TG5	C1	TP252	E4	TP320	J1	TP60	E1	X300	H3
IC5	F4	P001	G5	Q901	A3	QR200	D2	TP1	F4	TP253	E4	TP34	E4	TP701	J4		
IC500	G4	P002	D5	Q902	A4	QR201	D2	TP120	E3	TP280	E1	TP35	F4	TP702	J4		
IC512	D2	P300	G2	Q903	A4	QR202	D3	TP121	E2	TP281	E1	TP4	E4	TP722	E1		

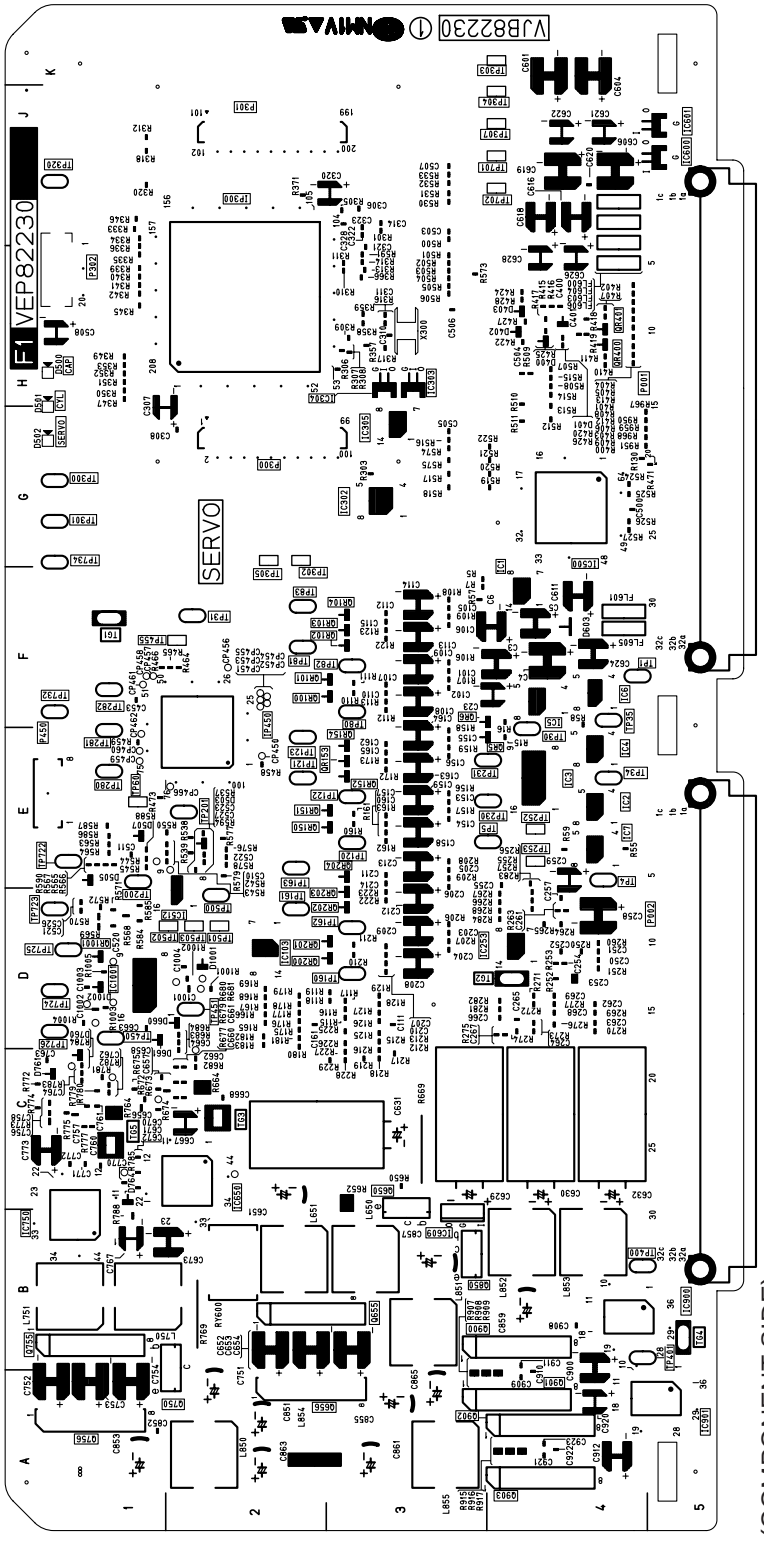

(COMPONENT SIDE)

F1: SERVO P.C. BOARD (VEP82230C)

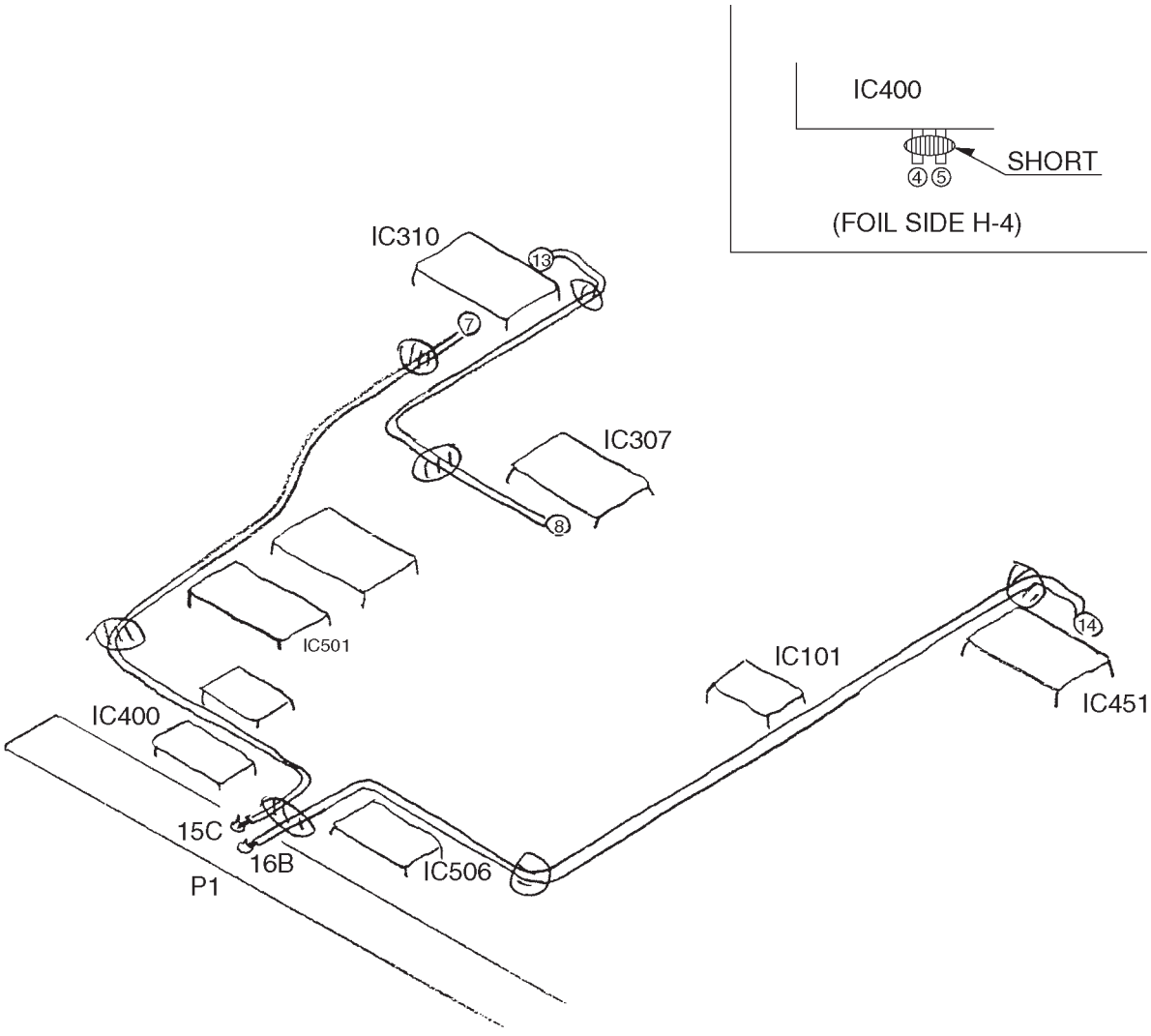

FOIL SIDE

F2: SYSCON P.C. BOARD (VEP86294C)

REF	LOC	REF	LOC	REF	LOC	REF	LOC	REF	LOC	REF	LOC	REF	LOC	REF	LOC
IC10	C2	IC1033	G4	IC39	E4	IC521	F2	IC549	D2	QR400	A4	QR417	A3	QR516	D4
IC1010	J4	IC1034	G4	IC4	A2	IC522	F3	IC551	F3	QR401	B4	QR500	C3	QR521	D3
IC1012	J4	IC1040	K2	IC40	B3	IC524	E2	IC552	F3	QR402	B4	QR501	B3	QR522	D3
IC1013	K3	IC11	B2	IC41	B3	IC525	F2	IC7	E4	QR403	B4	QR502	B3	QR525	D3
IC1017	J4	IC12	C2	IC5	B2	IC528	F1	IC9	C2	QR404	B4	QR503	B3	QR526	D3
IC1018	J5	IC14	B2	IC50	F4	IC529	G1	Q400	A4	QR405	A3	QR504	B3	QR527	C3
IC1020	H4	IC16	A2	IC502	D2	IC530	E1	Q500	E3	QR406	A3	QR505	B3	QR528	B3
IC1021	H4	IC21	E4	IC507	G2	IC531	F1	Q502	E3	QR407	B3	QR506	B3	QR529	B3
IC1022	G4	IC23	D4	IC509	G3	IC534	G2	Q520	C4	QR408	A3	QR507	C3	QR534	C3
IC1023	G4	IC3	A1	IC513	G2	IC535	G2	Q523	D4	QR409	A1	QR508	C3	QR535	C3
IC1026	F4	IC30	D3	IC514	G3	IC545	E3	Q524	C4	QR410	C1	QR509	C3		
IC1027	H3	IC31	C3	IC517	E2	IC546	E2	Q527	D4	QR411	C1	QR513	D3		
IC1028	H3	IC32	E3	IC519	F3	IC547	E2	Q545	B3	QR412	B1	QR514	D3		
IC1032	G4	IC38	D3	IC520	F2	IC548	D2	Q546	B3	QR413	B1	QR515	D3		

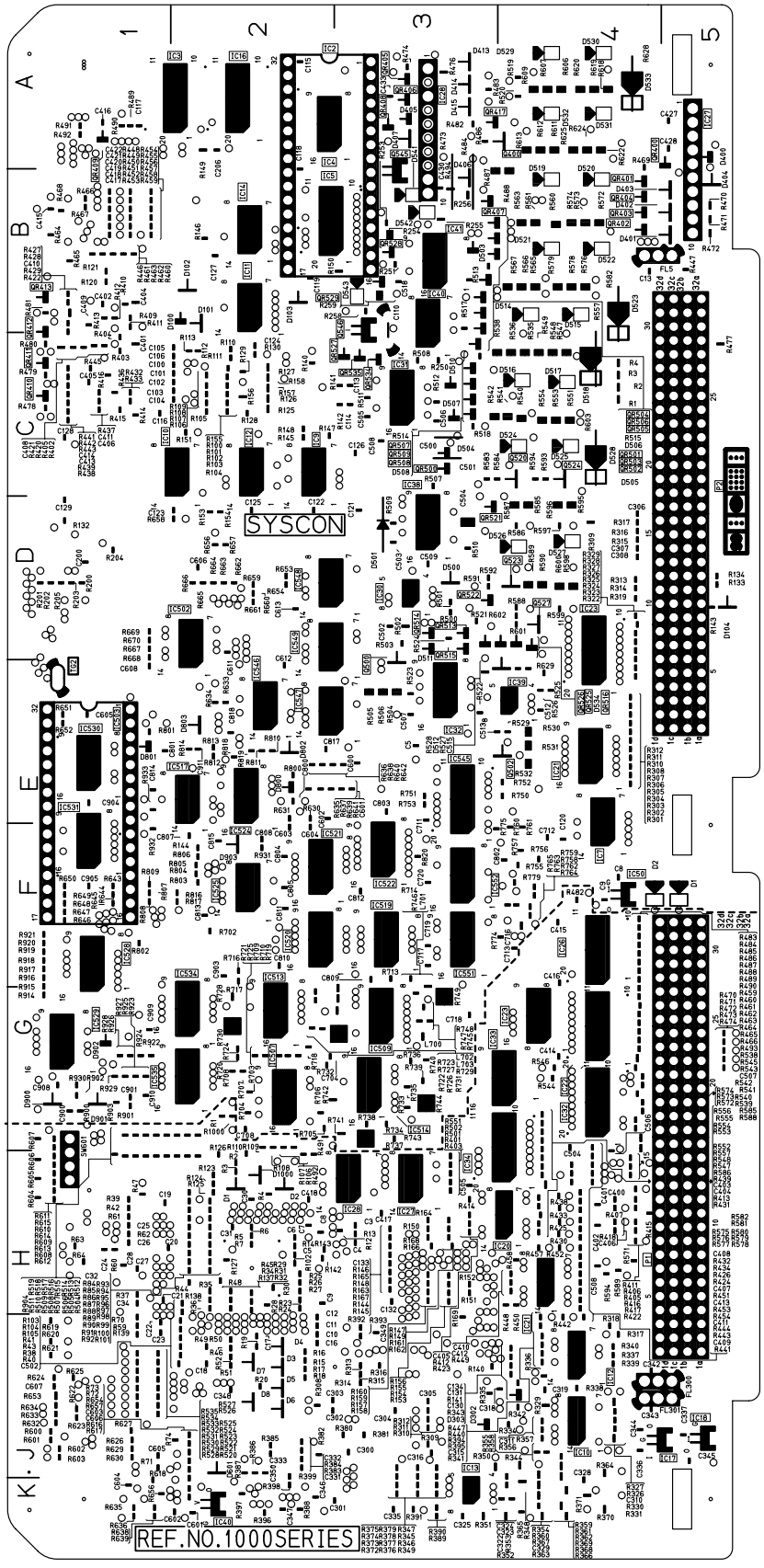

(FOIL SIDE)

F2: SYSCON P.C. BOARD (VEP86294C)

REF	LOC	REF	LOC	REF	LOC	REF	LOC	REF	LOC	REF	LOC	REF	LOC	REF	LOC	REF	LOC	REF	LOC	REF	LOC	REF	LOC
IC1	C2	IC1029	G1	IC25	E4	IC506	F1	IC553	F3	Q505	B4	Q522	D4	QR416	A3	TG1000	G1	TP1100	H3	TP600	E2
IC1002	H1	IC1030	J2	IC26	B1	IC508	E1	IC554	E1	Q506	C4	Q525	C4	QR510	A4	TG1300	K4	TP1101	H3	TP601	E2
IC1003	H1	IC1031	H4	IC27	A5	IC510	G2	IC6	B3	Q507	C4	Q526	D4	QR511	A4	TG2	E1	TP1102	H4	TP7	B2
IC1004	J1	IC1035	G4	IC28	A3	IC511	F2	IC8	D3	Q508	C4	Q528	A4	QR512	A4	TP1	B2	TP12	D1	TP700	G3
IC1005	G3	IC1036	H4	IC29	B1	IC512	F2	IP1000	H2	Q509	B4	Q529	A4	QR517	C4	TP10	B2	TP13	C1	TP701	G2
IC1006	H3	IC1037	H4	IC33	C1	IC515	F4	IP1037	K1	Q510	C4	Q530	A4	QR518	C3	TP1000	J1	TP1300	J3	TP702	G2
IC1007	J3	IC1038	H4	IC34	D1	IC518	F3	IP1100	H3	Q511	C4	Q531	A4	QR519	B3	TP1001	G2	TP1301	J4	TP703	G2
IC1008	J2	IC1039	J1	IC35	C1	IC523	E1	P1	G5	Q512	B4	Q532	A4	QR520	B4	TP1002	H3	TP1302	K4	TP8	A2
IC1009	J3	IC13	C3	IC36	D4	IC527	G2	P1000	H1	Q513	B4	Q533	A4	QR523	A4	TP1003	H3	TP1304	K3	VR1300	K4
IC1011	J4	IC15	D1	IC37	B2	IC532	F1	P1600	J1	Q514	B4	Q534	A4	QR524	A4	TP1005	J1	TP1305	K3	X100	C3
IC1014	K4	IC17	A2	IC42	B2	IC536	D1	P2	D5	Q515	B4	Q535	A4	SW1000	G1	TP1011	H1	TP14	C1	X1000	H3
IC1015	K2	IC19	E4	IC500	E2	IC537	F4	Q1300	J4	Q516	B4	QR1000	G1	SW1001	H1	TP1012	J1	TP2	D2	X1300	J2
IC1016	K2	IC2	A3	IC501	E2	IC538	D2	Q1301	J4	Q517	B4	QR1001	G1	SW1601	H1	TP1013	J1	TP3	B2	X1301	J2
IC1019	H4	IC20	D4	IC503	E1	IC540	F2	Q501	E3	Q518	B4	QR1002	G1	SW1602	J1	TP1014	H1	TP4	B2	X1302	J2
IC1024	G4	IC22	D4	IC504	D2	IC542	F2	Q503	E4	Q519	B4	QR414	A3	SW900	F1	TP1015	J1	TP5	B2	X600	E2
IC1025	F4	IC24	E4	IC505	D2	IC550	G3	Q504	C4	Q521	C4	QR415	A3	TG1	C1	TP11	B2	TP6	B2		

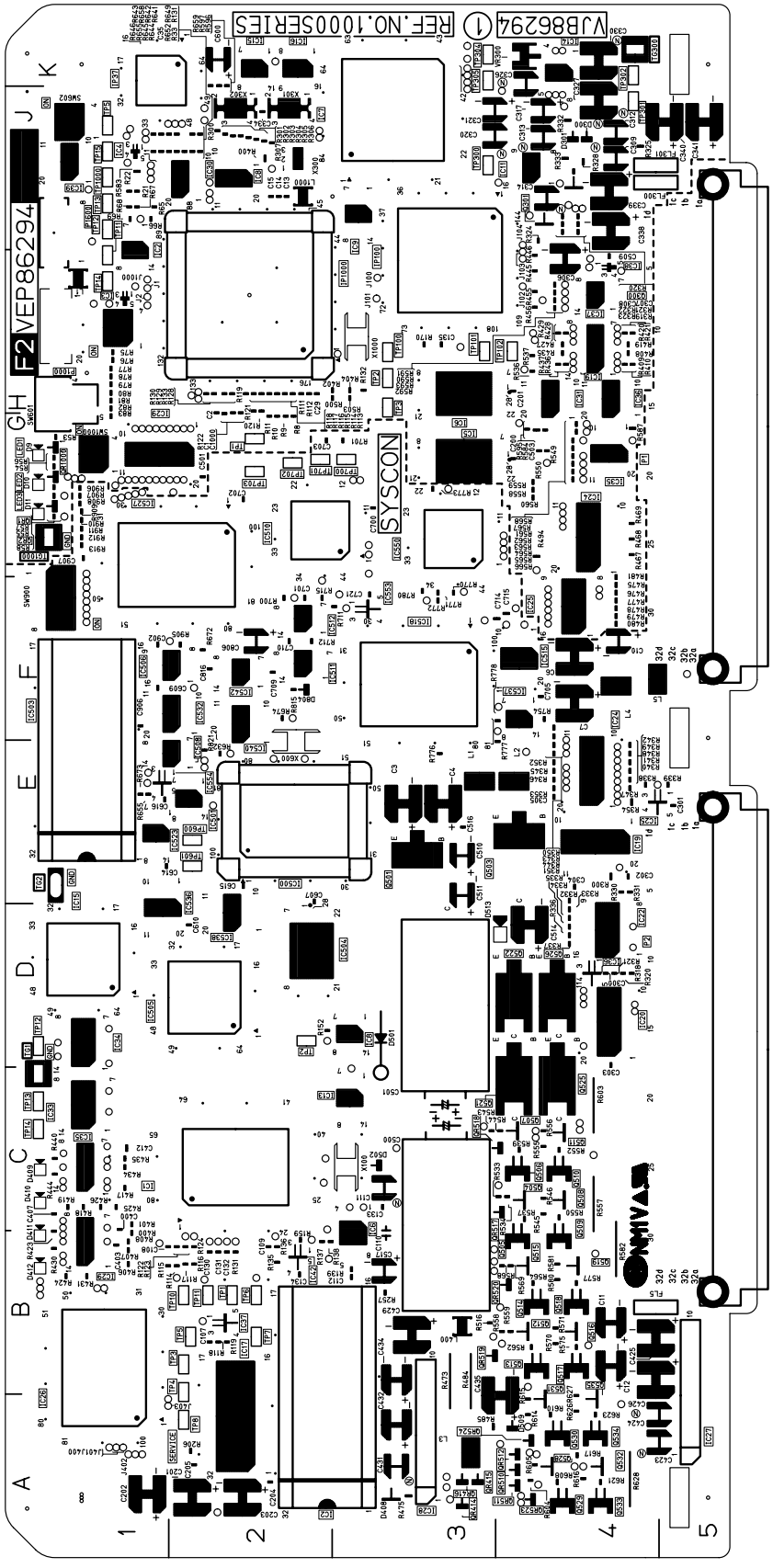

(COMPONENT SIDE)

F2: SYSCON P.C. BOARD (VEP86294C)

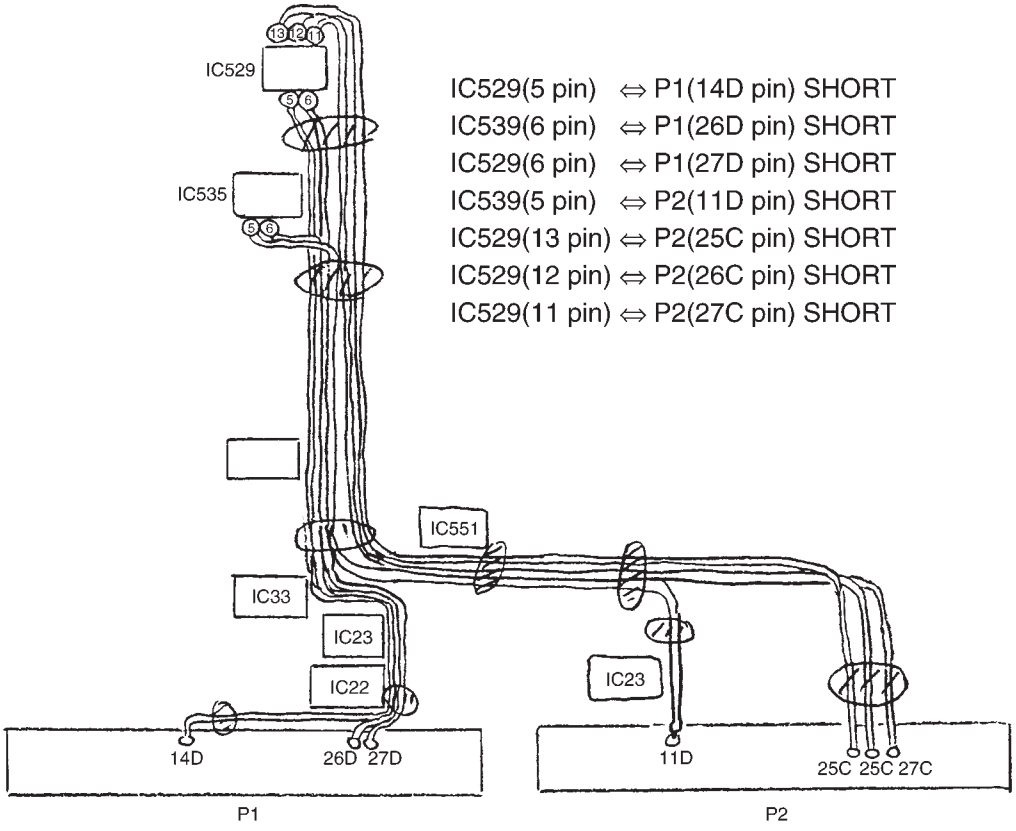

(FOIL SIDE)

F4: REC PB P.C. BOARD (VEP83534A)

REF	LOC	REF	LOC	REF	LOC	REF	LOC	REF	LOC	REF	LOC
IC1	G1	IC113	F2	IC408	E1	IC573	G4	IC852	D1	QR401	B2
IC2	F1	IC115	G1	IC410	E1	IC575	H3	IC853	D1	QR500	J1
IC5	F4	IC116	G2	IC430	A1	IC576	H4	IC854	E1	QR600	J2
IC6	F4	IC200	B3	IC432	B2	IC577	H3	IC856	E2	QR601	J3
IC7	G1	IC201	A3	IC435	A2	IC579	H3	IC857	E2	QR602	J3
IC8	F1	IC204	A4	IC436	A2	IC700	B3	IC900	D4	QR603	J4
IC9	B3	IC205	A4	IC437	A2	IC702	B3	IC901	E4		
IC100	F3	IC207	B4	IC438	B2	IC704	D4	IC903	C3		
IC102	F3	IC330	C1	IC439	A2	IC707	C3	IC905	D2		
IC103	F4	IC331	C2	IC440	A2	IC708	C3	IC908	E2		
IC104	F1	IC332	C1	IC441	B2	IC709	C3	IC909	E4		
IC106	F2	IC333	C1	IC442	B3	IC800	C4	IC911	E3		
IC107	F3	IC334	D1	IC443	B2	IC802	C4	IC950	G1		
IC108	F4	IC403	B1	IC502	H1	IC803	C3	IC951	G2		
IC109	F3	IC406	F1	IC505	J1	IC804	B3	Q852	D1		
IC111	G2	IC407	F1	IC572	G3	IC832	G2	QR400	B2		

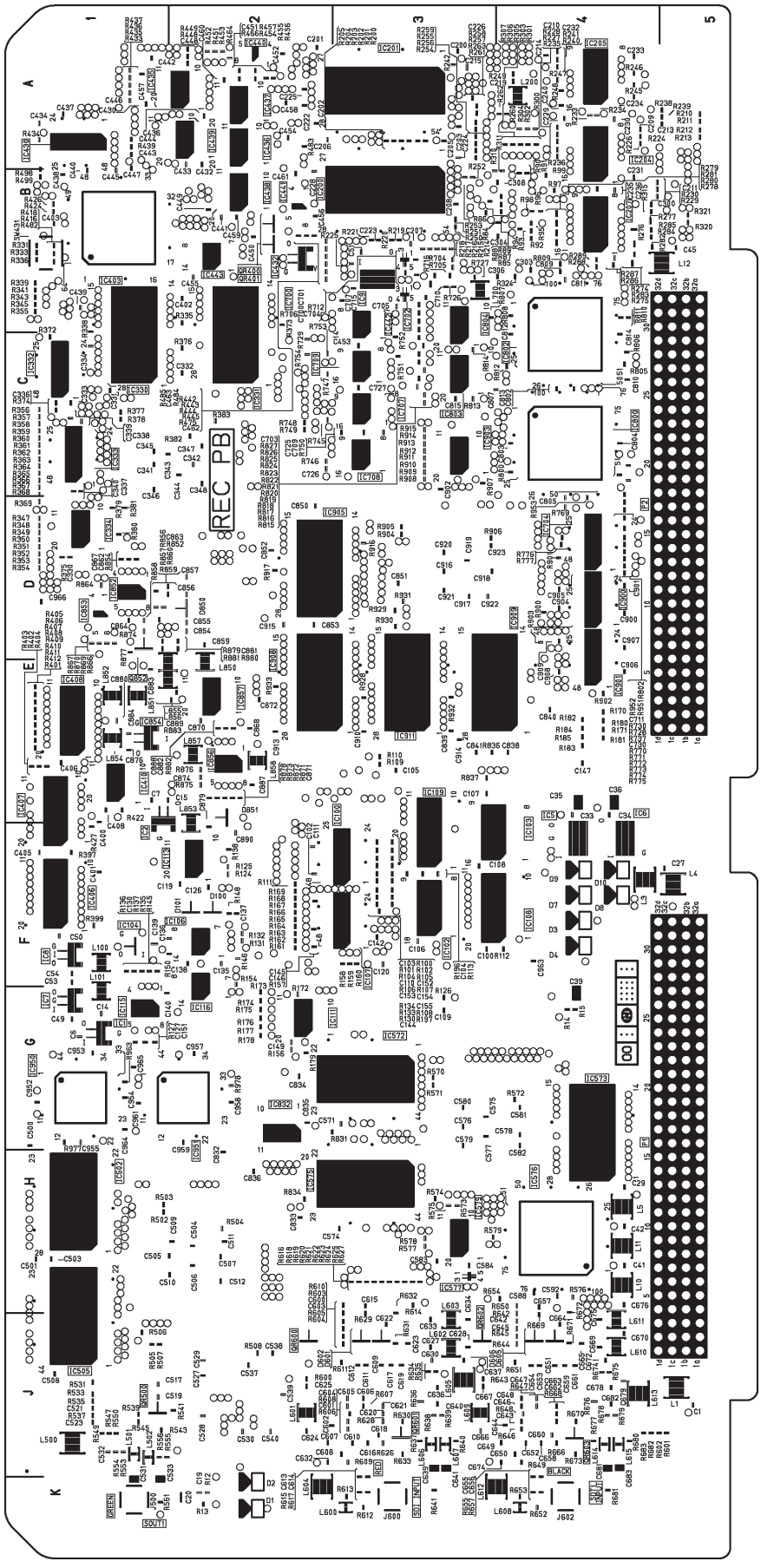

(FOIL SIDE)

F4: REC PB P.C. BOARD (VEP83534A)

REF	LOC	REF	LOC	REF	LOC	REF	LOC	REF	LOC	REF	LOC	REF	LOC
IC3	K2	IC402	C2	IC603	J4	IC910	E2	Q851	D1	TP105	E2	TP603	H4
IC4	G4	IC409	C2	IC604	J4	IC952	F4	SW100	E3	TP106	E2	TP700	C3
IC101	E3	IC431	A2	IC605	K4	IC953	E1	SW430	B2	TP107	G2	TP701	C3
IC105	F3	IC433	C1	IC701	C3	IC954	F3	SW500	H2	TP300	B3	TP702	C3
IC110	E3	IC434	B1	IC703	C3	IC955	G1	SW600	J4	TP301	B3	TP800	C2
IC112	E4	IC500	H2	IC705	D4	IC956	F4	SW950	G1	TP500	H2	TP850	D1
IC114	F2	IC501	H1	IC706	C4	IC957	G1	TG1	D1	TP501	G2	X100	F2
IC117	G3	IC504	H1	IC801	C4	IC958	G1	TG2	J1	TP570	H3	X101	F2
IC202	A3	IC506	J2	IC830	G2	P1	G5	TG3	E4	TP571	H3	X200	A4
IC203	A4	IC507	J1	IC831	E3	P2	C5	TG4	A5	TP572	H3	X430	C1
IC206	A5	IC570	G3	IC833	E3	P330	C1	TG5	J5	TP573	H3	X850	E2
IC300	B4	IC571	G3	IC850	D2	P331	C1	TP100	D1	TP574	H3	X851	E2
IC301	B5	IC574	H3	IC851	D2	P400	E1	TP101	G4	TP575	H3		
IC335	C1	IC600	J3	IC855	E2	P430	A1	TP102	G4	TP600	H2		
IC400	F1	IC601	J3	IC902	D3	P952	D1	TP103	G4	TP601	H3		
IC401	F1	IC602	J3	IC904	D4	Q850	D1	TP104	G4	TP602	H3		

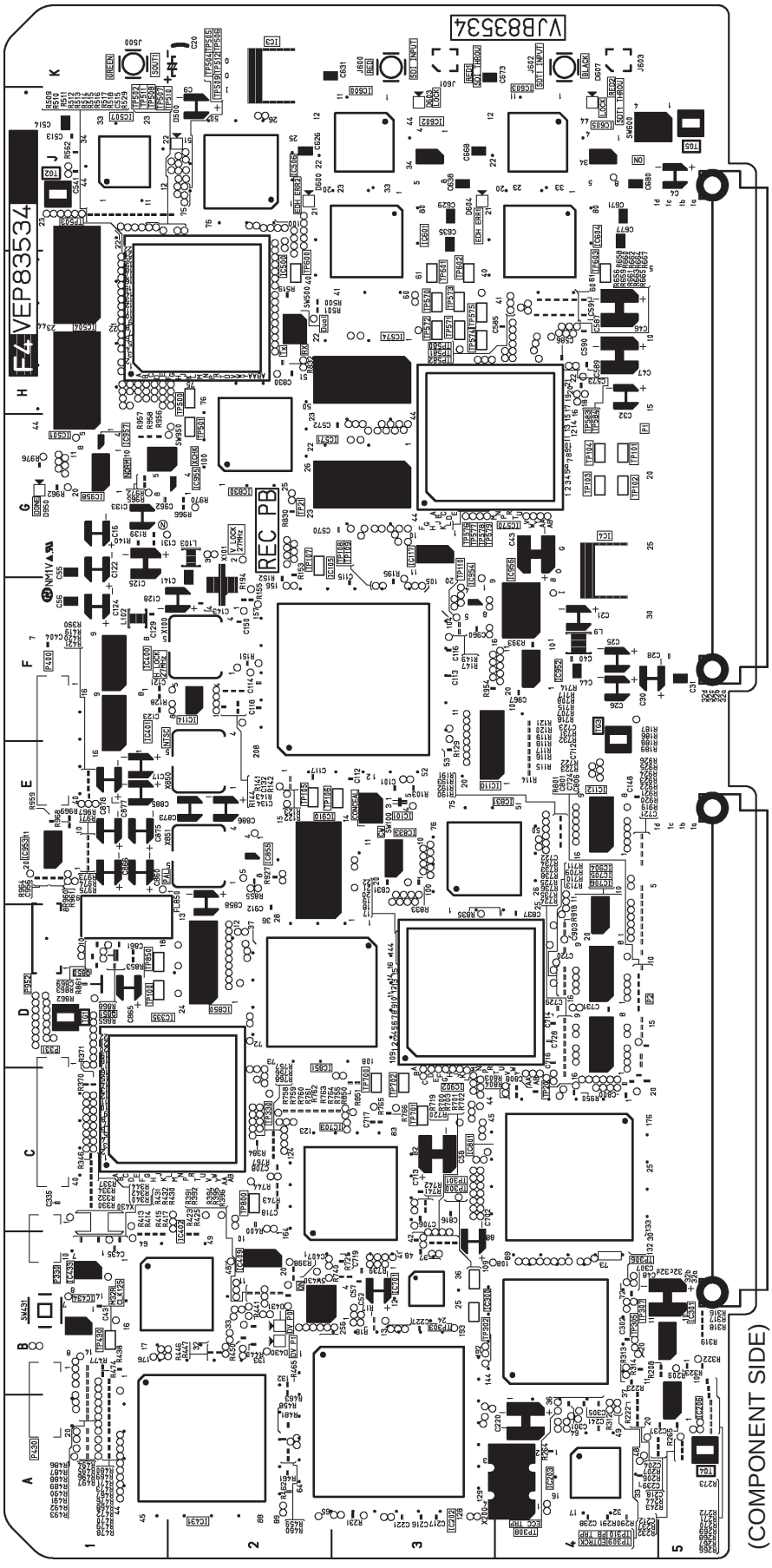

(COMPONENT SIDE)

F4: REC PB P.C. BOARD (VEP83534)

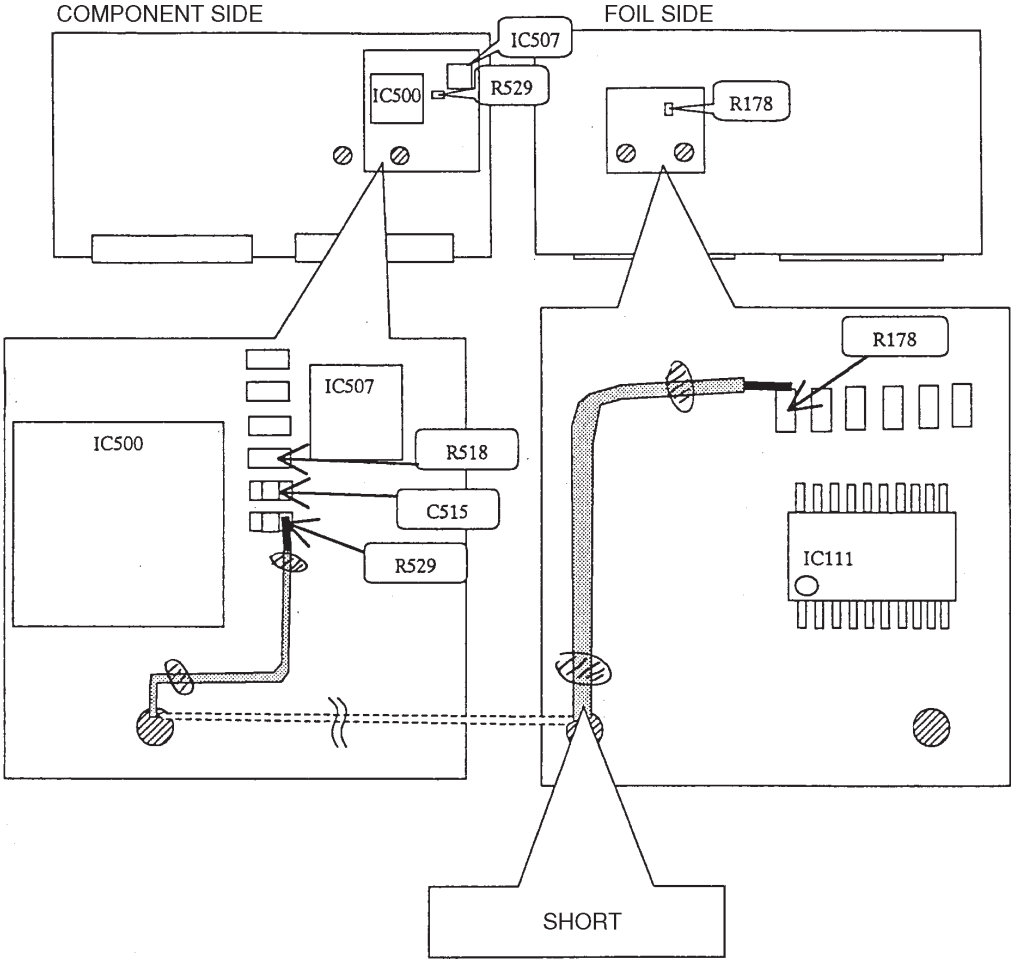

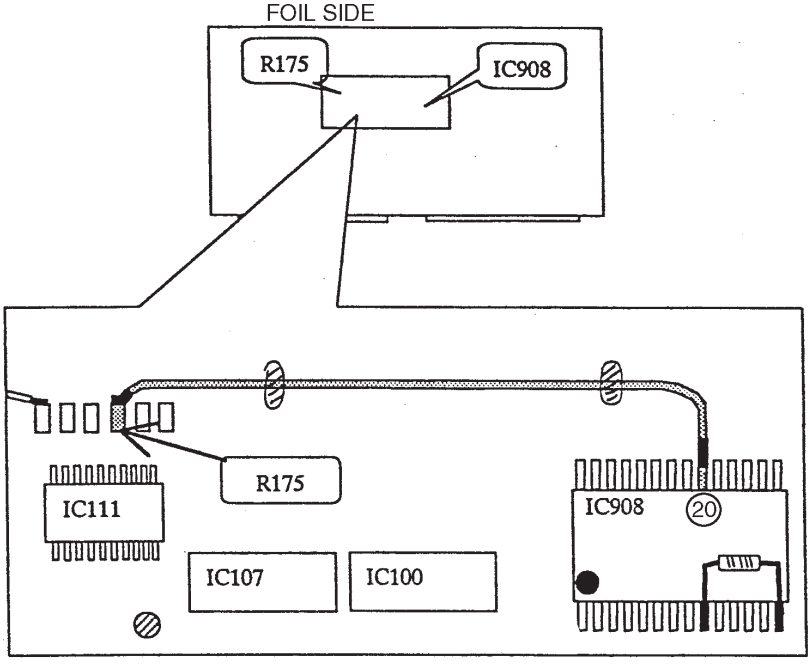

F4: REC PB P.C. BOARD (VEP83534A)

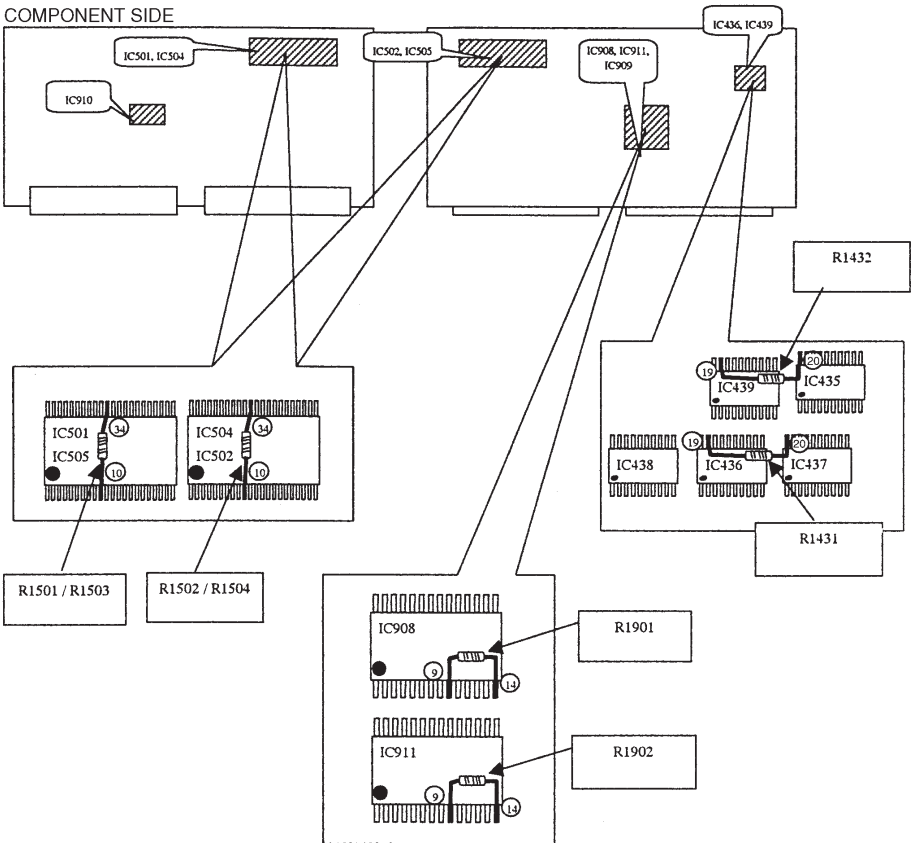

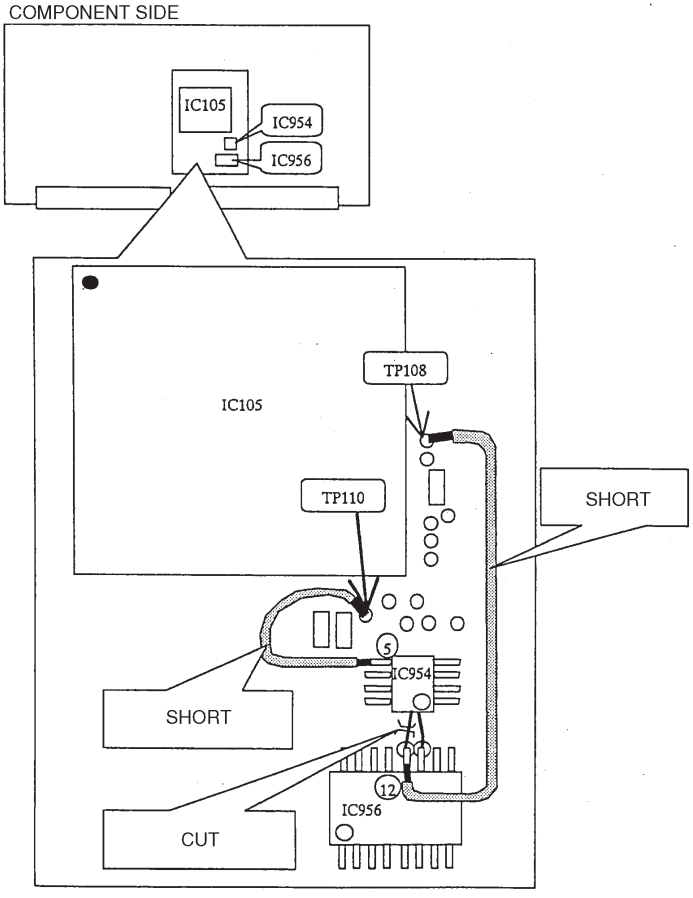

F5: V OUT P.C. BOARD (VEP83494A)

REF	LOC	REF	LOC	REF	LOC	REF	LOC	REF	LOC	REF	LOC	REF	LOC	REF	LOC	REF	LOC
IC3006	D3	IC3022	C4	IC3044	J2	IC3065	H2	IC3089	A5	IC3113	A3	IC3137	G4	IC3177	B1	IC3203	E4
IC3007	B4	IC3023	D4	IC3045	J1	IC3066	G2	IC3093	E3	IC3115	A3	IC3138	F4	IC3178	A4	IC3210	A4
IC3008	B3	IC3024	D4	IC3046	H1	IC3067	H3	IC3094	E3	IC3116	A2	IC3139	G4	IC3179	D1	Q3004	C1
IC3009	D3	IC3025	B4	IC3047	J2	IC3068	H2	IC3095	E3	IC3117	A2	IC3146	B2	IC3180	D2	Q3005	C1
IC3010	B4	IC3026	D4	IC3048	J3	IC3069	F2	IC3099	A1	IC3120	C1	IC3147	C2	IC3181	D2	Q3006	B1
IC3011	A4	IC3027	E4	IC3049	E1	IC3070	F3	IC3100	E1	IC3121	B1	IC3149	B2	IC3182	D1	Q3007	C1
IC3012	H4	IC3028	C4	IC3053	G3	IC3074	H1	IC3102	E1	IC3122	B2	IC3150	B2	IC3184	D1	Q3008	C1
IC3013	J4	IC3029	B4	IC3056	F2	IC3081	J1	IC3103	C1	IC3124	B1	IC3151	C2	IC3185	C1	Q3011	E4
IC3014	H4	IC3030	C3	IC3058	G2	IC3082	J1	IC3104	D1	IC3126	B1	IC3152	B2	IC3187	J3	Q3013	F4
IC3015	H4	IC3031	E4	IC3059	G2	IC3083	G1	IC3107	A1	IC3127	C1	IC3153	B3	IC3195	B3	Q3015	H3
IC3018	C4	IC3032	E4	IC3060	G2	IC3084	F1	IC3108	B1	IC3130	H2	IC3157	C2	IC3196	G3	Q3017	H3
IC3019	D4	IC3033	D4	IC3061	H2	IC3085	G1	IC3110	A4	IC3131	H3	IC3158	C2	IC3199	E4		
IC3020	C4	IC3034	C4	IC3062	H2	IC3087	A5	IC3111	A3	IC3133	F1	IC3170	A3	IC3200	G3		
IC3021	C4	IC3035	C4	IC3064	H3	IC3088	B5	IC3112	A3	IC3136	F4	IC3172	A3	IC3202	D3		

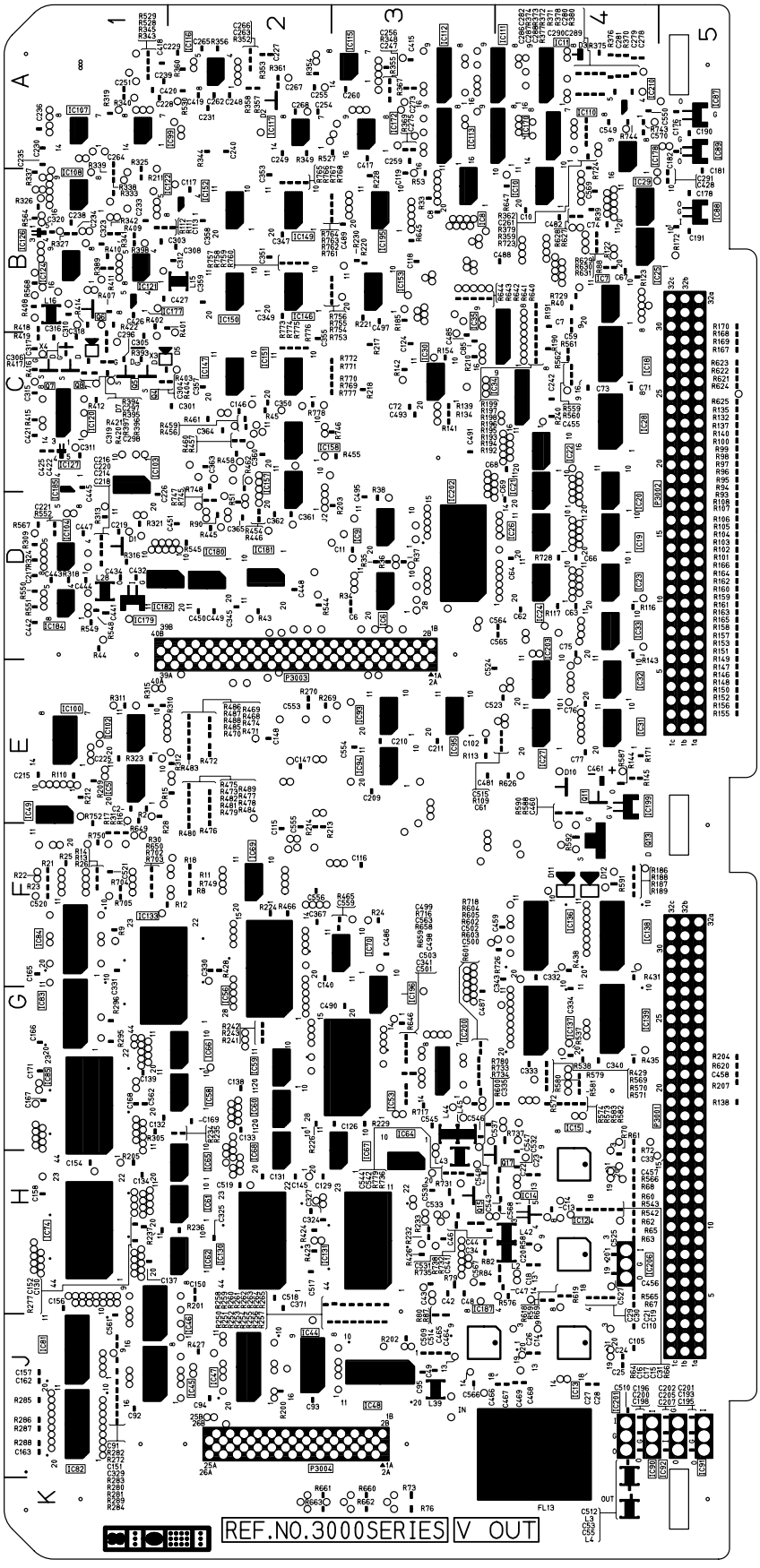

(FOIL SIDE)

F5: V OUT P.C. BOARD (VEP83494A)

REF	LOC	REF	LOC	REF	LOC	REF	LOC	REF	LOC	REF	LOC
IC3162	E2	IC3197	D4	IP3163	J2	TG3002	B4	TP3013	C2	VR3019	J3
IC3164	C3	IC3201	J4	IP3193	F3	TG3003	H4	TP3015	A2	VR3020	K3
IC3165	D3	IC3204	D4	P3001	G5	TP3001	B1	VC3001	B1	VR3021	K2
IC3173	A3	IC3205	H3	P3002	D5	TP3002	B1	VC3002	B1	VR3025	J3
IC3174	A3	IC3206	H4	P3003	D2	TP3003	A2	VR3001	K3	X3001	D1
IC3175	A2	IC3207	G4	P3004	J2	TP3004	B1	VR3002	J3	X3002	A2
IC3176	C1	IC3208	G4	P3006	E1	TP3005	B2	VR3004	A1	X3003	C1
IC3183	D1	IC3209	G3	Q3001	J3	TP3006	C2	VR3006	A3	X3004	C1
IC3186	J3	IP3034	H2	Q3002	J3	TP3007	A4	VR3007	A3		
IC3189	C4	IP3050	F2	Q3003	J4	TP3008	A4	VR3012	A3		
IC3190	F3	IP3073	E2	Q3009	A4	TP3009	A3	VR3013	A3		
IC3191	B4	IP3140	F4	Q3014	F4	TP3010	B4	VR3014	A1		
IC3192	C3	IP3145	D2	Q3016	H4	TP3011	B1	VR3015	D1		
IC3194	B3	IP3160	F2	TG3001	C3	TP3012	B1	VR3016	D1		

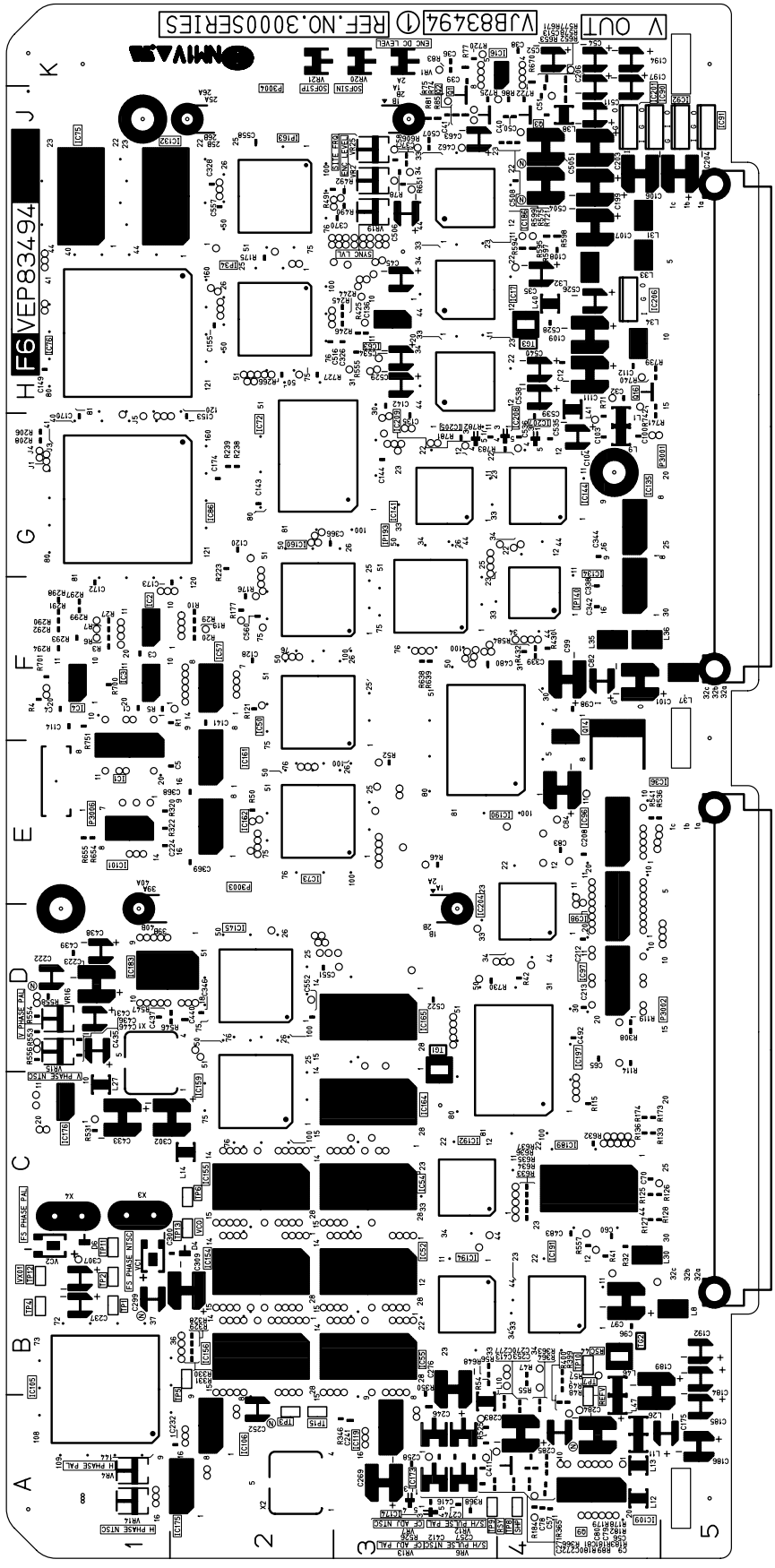

(COMPONENT SIDE)

F5 SUB: 422 DA SUB P.C. BOARD (VEP83385B)

REF	LOC	REF	LOC	REF	LOC	REF	LOC
IC3001	D1	IC3038	G1	Q3007	F2	Q3024	H3
IC3015	F3	IC3039	H3	Q3008	F3	Q3027	H4
IC3019	G3	IC3040	D1	Q3009	F3	Q3028	H4
IC3023	G3	IC3041	C1	Q3010	F2	Q3029	H4
IC3027	G2	IC3042	B1	Q3011	F2	Q3030	H2
IC3030	G4	P3001	C2	Q3012	F3	Q3031	H2
IC3031	H4	P3002	H2	Q3013	H2	Q3032	H3
IC3033	B1	P3003	E1	Q3015	H3	Q3033	H3
IC3034	D1	Q3002	E3	Q3018	H4		
IC3035	C1	Q3004	F3	Q3021	H2		
IC3036	D1	Q3005	E3	Q3022	G4		
IC3037	C1	Q3006	F2	Q3023	G4		

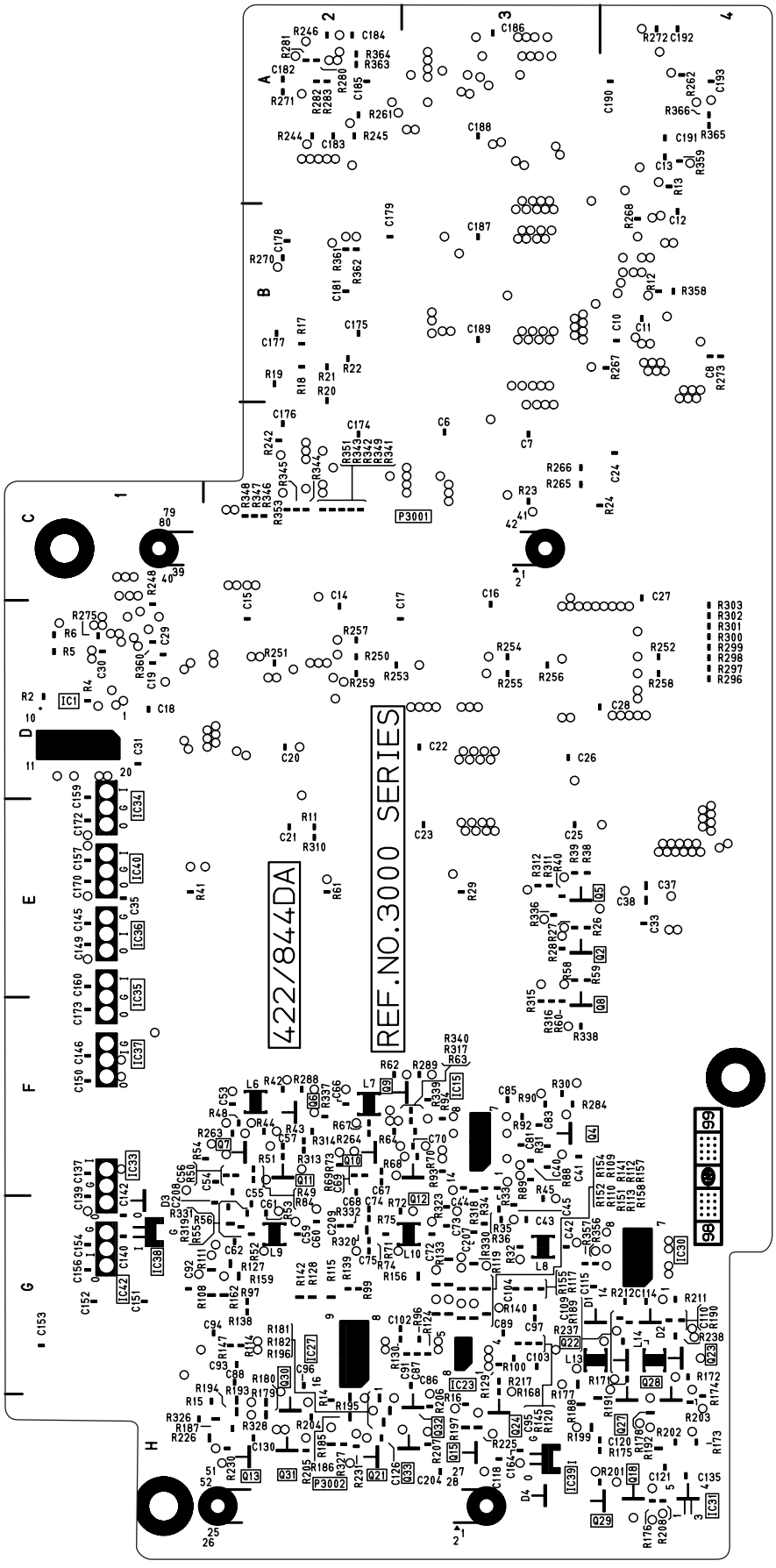

(FOIL SIDE)

F5 SUB: 422 DA SUB P.C. BOARD (VEP83385B)

REF	LOC	REF	LOC	REF	LOC	REF	LOC	REF	LOC	REF	LOC
IC3002	C3	IC3014	E4	IC3032	H4	IC3054	B4	TG3001	H1	VR3008	F3
IC3003	C3	IC3016	G3	IC3043	C2	Q3001	F2	TG3002	G4	VR3009	F3
IC3004	B4	IC3017	G2	IC3044	B2	Q3003	F2	TP3001	G3	VR3010	G3
IC3005	C4	IC3018	G2	IC3045	C2	Q3014	H2	TP3002	G1	VR3011	H3
IC3006	D2	IC3020	G2	IC3046	B2	Q3016	G4	TP3003	G2	VR3012	G2
IC3007	D3	IC3021	G3	IC3047	B2	Q3017	G4	VR3001	F3	VR3013	G4
IC3008	D4	IC3022	G2	IC3048	A2	Q3019	G4	VR3002	F3	VR3014	G4
IC3009	D1	IC3024	G2	IC3049	A3	Q3020	G4	VR3003	F2		
IC3010	D2	IC3025	G2	IC3050	B3	Q3025	H2	VR3004	F1		
IC3011	D3	IC3026	G3	IC3051	A3	Q3026	H2	VR3005	F2		
IC3012	D3	IC3028	H2	IC3052	B3	Q3034	H3	VR3006	F2		
IC3013	E4	IC3029	H3	IC3053	A4	Q3035	H2	VR3007	F3		

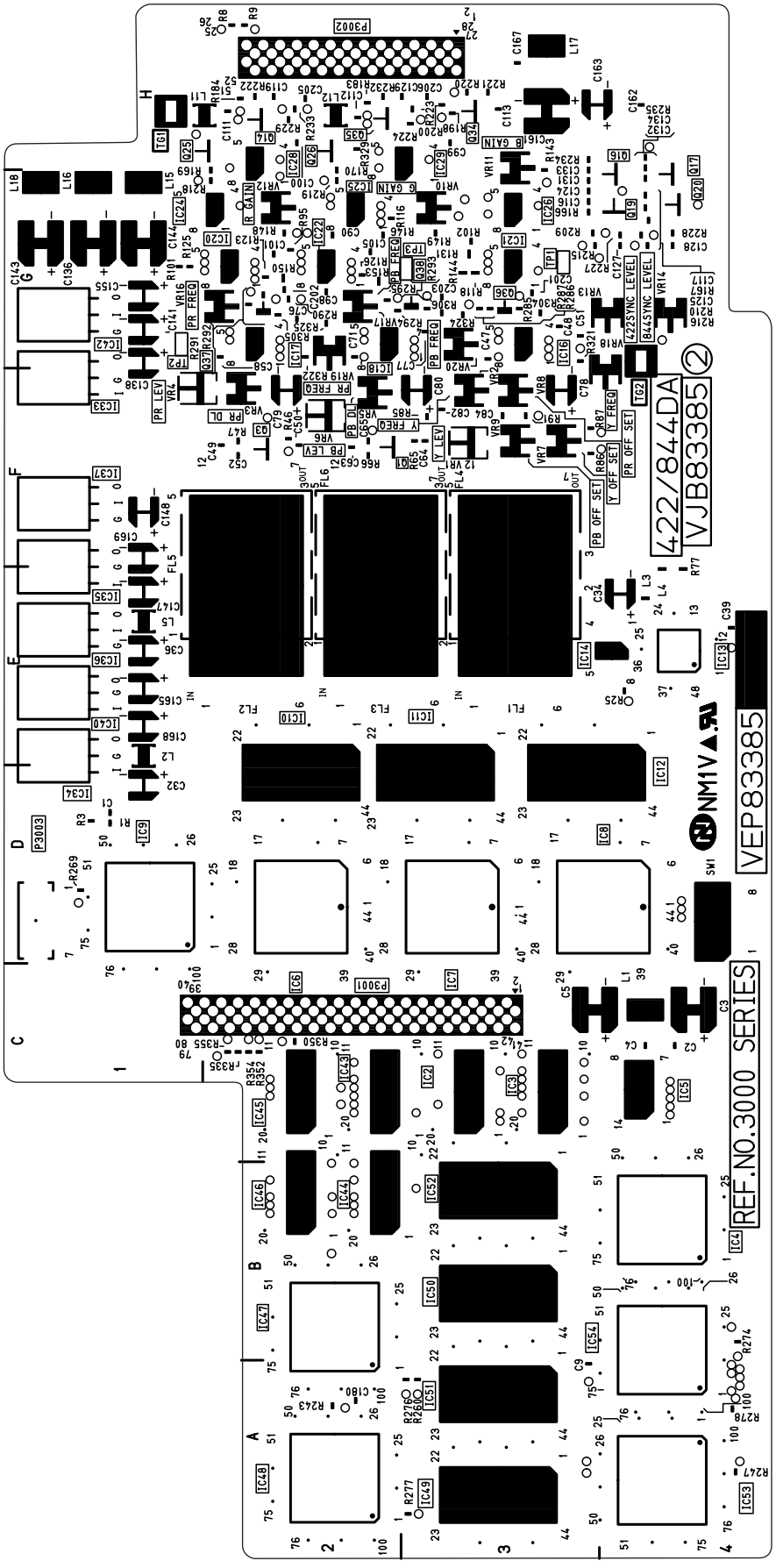

(COMPONENT SIDE)

F6: A PROC P.C. BOARD (VEP84343A)

REF	LOC	REF	LOC	REF	LOC	REF	LOC	REF	LOC
IC173	G3	IC283	E4	IC32	C4	IC553	D2	IC821	F2
IC174	H3	IC284	D3	IC33	G3	IC555	E1	IC826	F3
IC175	H3	IC285	E3	IC34	C4	IC556	E2	IC852	J1
IC176	F4	IC286	D3	IC342	A4	IC557	C3	Q692	J4
IC177	G3	IC287	E3	IC35	B4	IC622	D1	Q693	J4
IC187	G3	IC288	D3	IC36	C1	IC623	D2	Q694	J4
IC188	G3	IC289	E3	IC37	G2	IC698	J4	Q731	F4
IC232	H3	IC31	C2	IC372	A4	IC701	G3	Q732	G4
IC234	H3	IC313	F1	IC374	B4	IC731	G4	Q733	G4
IC235	J3	IC314	H1	IC38	B5	IC735	H4	Q734	G4
IC236	J3	IC315	G1	IC39	D4	IC773	J2		
IC237	J3	IC316	G1	IC40	A5	IC775	J2		
IC238	J3	IC317	F1	IC403	B4	IC777	J1		
IC239	H3	IC318	G1	IC41	B4	IC778	J1		

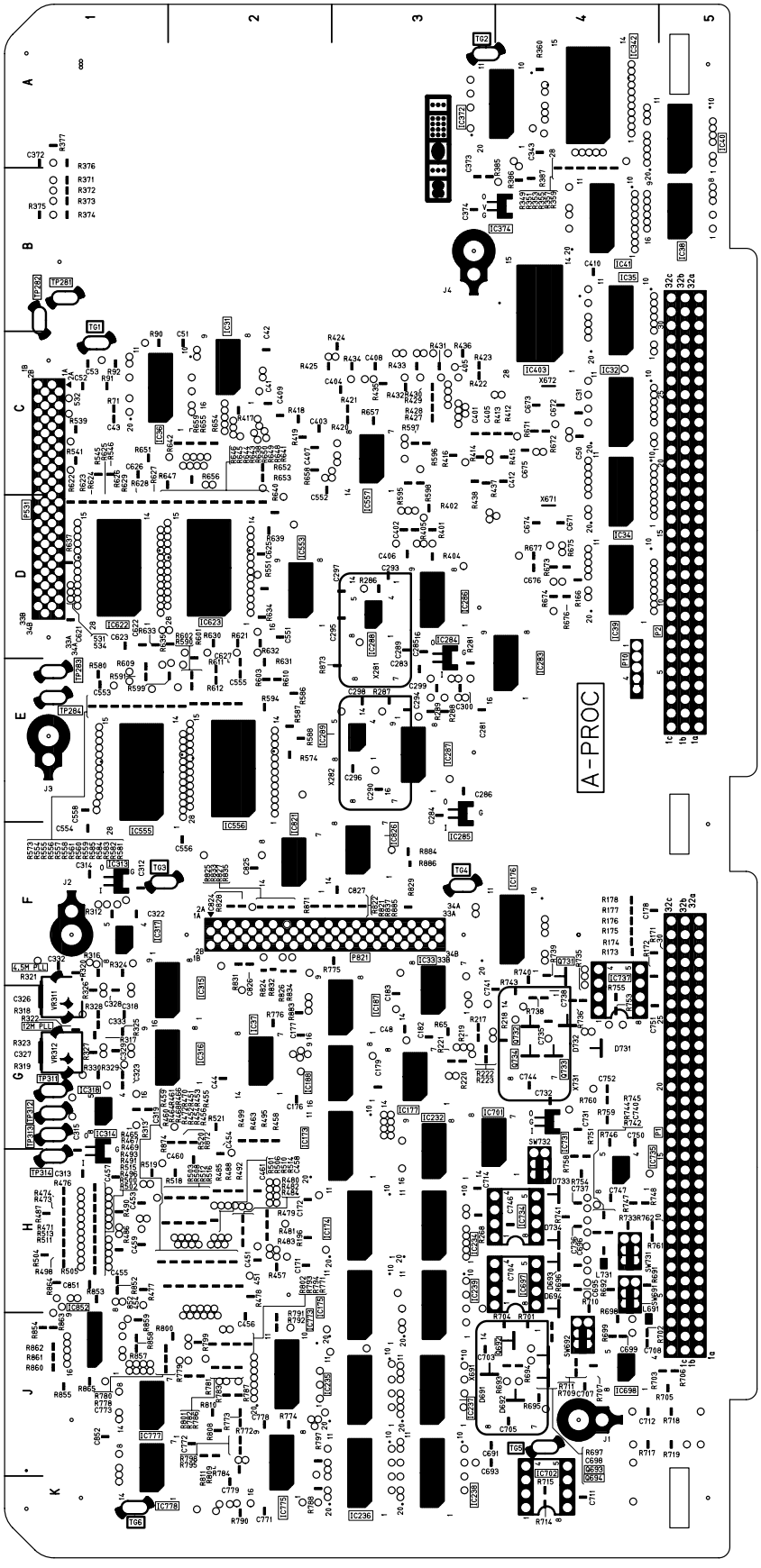

(FOIL SIDE)

F6: A PROC P.C. BOARD (VEP84343A)

REF	LOC	REF	LOC	REF	LOC	REF	LOC	REF	LOC	REF	LOC
IC1	E4	IC402	C2	IC734	H3	Q691	J4	TP232	J3	X281	D3
IC171	H3	IC404	B4	IC737	G4	SW691	H4	TP233	K3	X282	E3
IC172	F4	IC451	H1	IC776	J2	SW692	J4	TP281	B1	X671	D4
IC185	G3	IC452	H2	IC823	F3	SW731	H4	TP282	B1	X672	C4
IC186	G2	IC554	E2	IC851	J1	SW732	H4	TP283	E1	X691	J4
IC2	E4	IC621	D2	IP373	B4	TG1	C1	TP284	E1	X731	G4
IC292	E3	IC671	C4	P1	G5	TG2	A3	TP311	G1		
IC312	G1	IC672	D4	P10	D4	TG3	F1	TP312	G1		
IC321	G1	IC691	J3	P2	D5	TG4	F3	TP313	G1		
IC322	G1	IC697	H3	P371	B1	TG5	J4	TP314	H1		
IC341	A4	IC700	G3	P531	D1	TG6	K1	VR311	G1		
IC401	C3	IC702	K4	P821	F2	TP231	K3	VR312	G1		

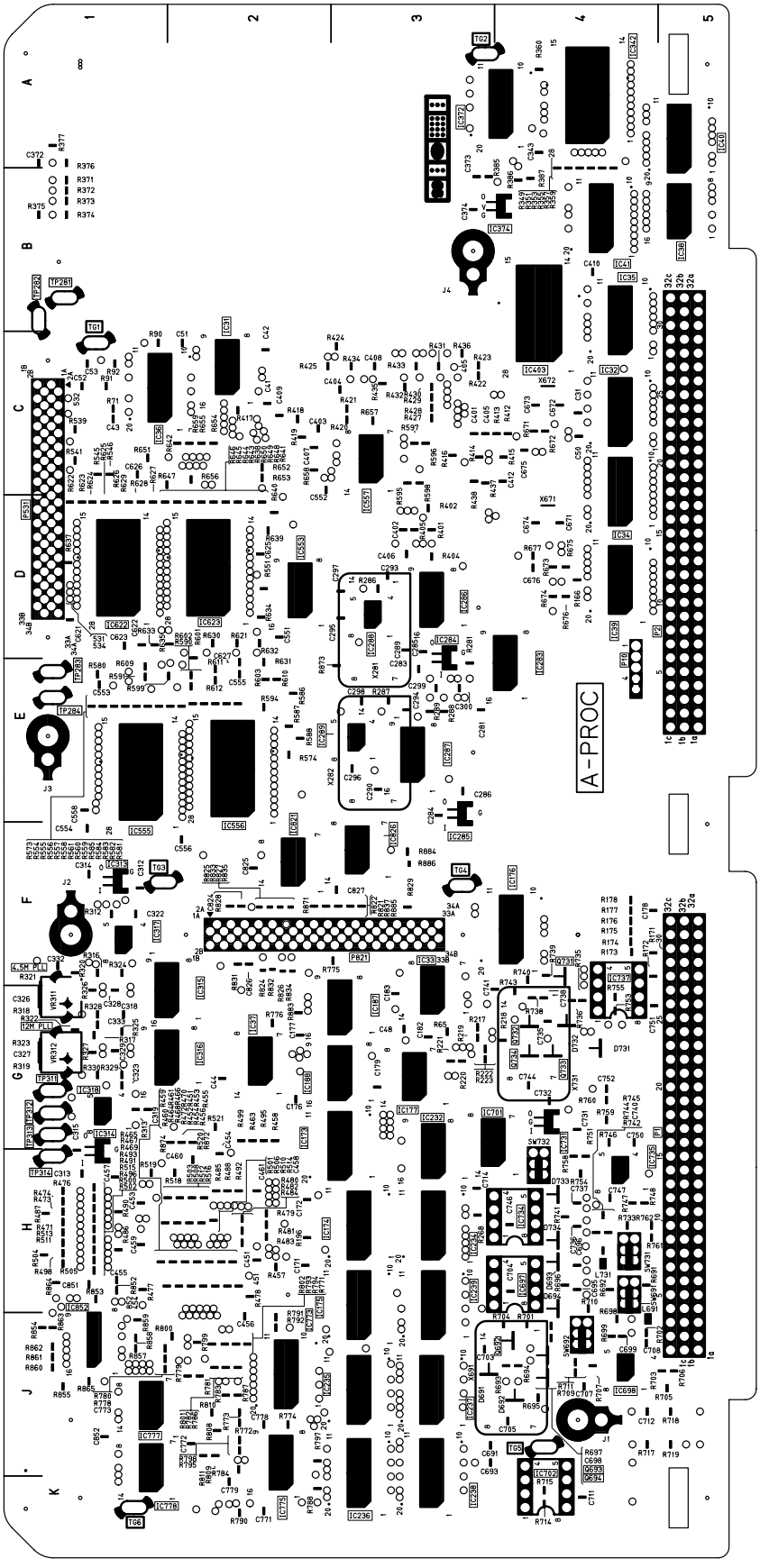

(COMPONENT SIDE)

F6 SUB: A JOG P.C. BOARD (VEP84346A)

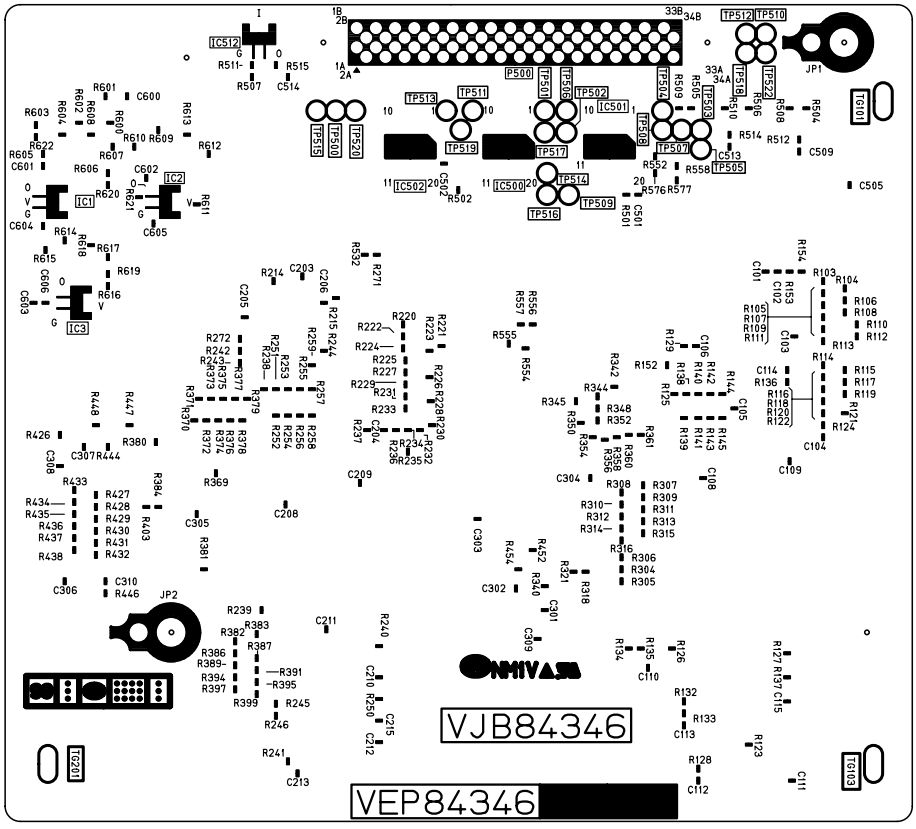

(FOIL SIDE)

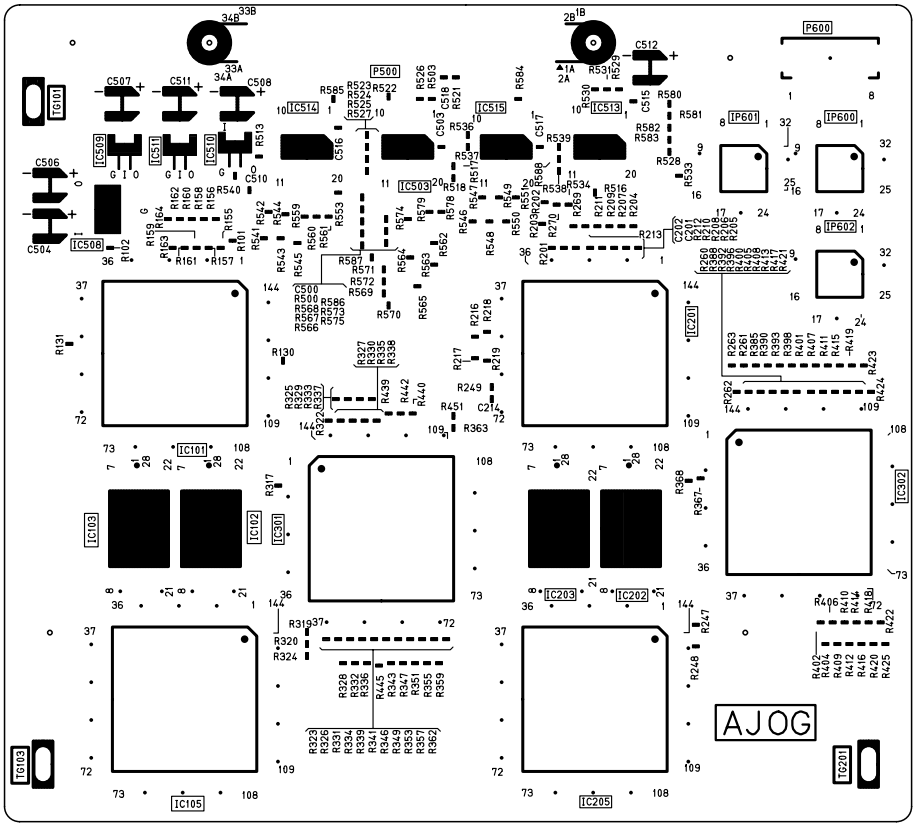

(COMPONENT SIDE)

F7: V IN P.C. BOARD (VEP83409C)

REF	LOC	REF	LOC	REF	LOC	REF	LOC	REF	LOC	REF	LOC	REF	LOC
IC151	H4	IC454	H2	IC707	D3	Q301	I4	Q504	F1	Q651	D2	Q951	D3
IC152	G4	IC455	H2	IC751	C2	Q302	H4	Q505	F1	Q653	D1	Q952	D3
IC153	G4	IC456	H1	IC753	C2	Q303	I4	Q507	F2	Q656	D1	Q953	D3
IC154	D4	IC460	I1	IC754	A2	Q351	I3	Q508	G1	Q701	B3	Q954	D2
IC156	F4	IC501	H3	IC801	C1	Q352	I3	Q510	G1	Q702	B3	Q956	E3
IC204	E4	IC511	F2	IC803	C1	Q353	I3	Q511	F1	Q705	C3	Q957	D3
IC255	C4	IC512	F2	IC804	A1	Q401	G4	Q513	E1	Q706	B3	QR201	E4
IC301	I3	IC514	G3	IC852	C3	Q404	F4	Q516	F1	Q707	B2	QR551	G2
IC302	I3	IC517	F1	IC853	C4	Q405	G3	Q517	F1	Q751	B2	QR701	C3
IC405	H3	IC518	F2	IC951	D4	Q406	G3	Q518	F1	Q752	B2	QR702	D3
IC406	I4	IC701	B3	IC958	D2	Q454	H1	Q601	D1	Q801	B1	QR751	D2
IC407	G3	IC703	C3	IC959	E3	Q455	H1	Q602	D1	Q802	B1	QR801	B1
IC452	I2	IC704	A3	IC982	A4	Q502	G1	Q603	D1	Q806	B1		
IC453	I2	IC706	D3	IC983	B4	Q503	G1	Q604	D1	Q901	C3		

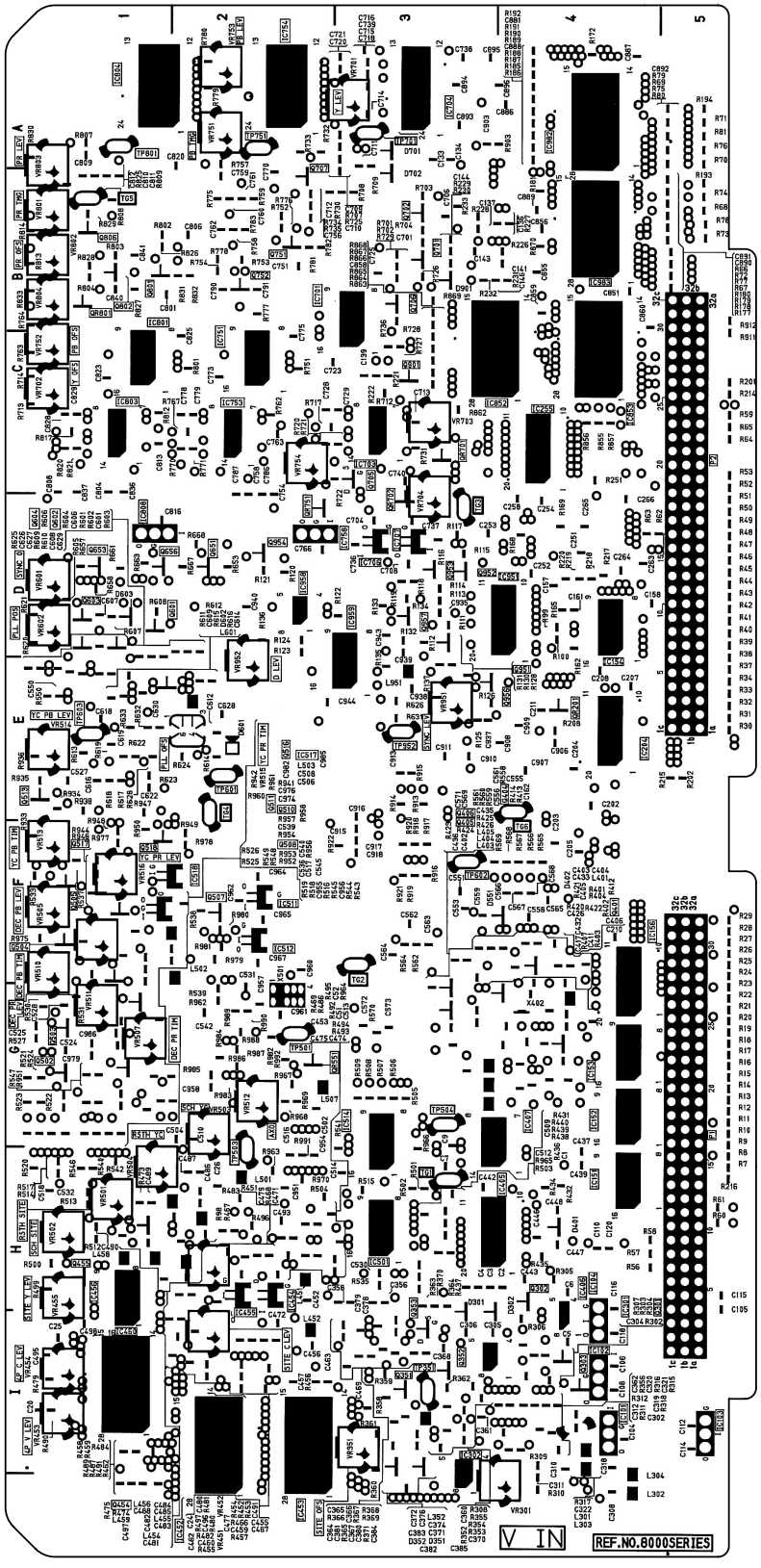

(FOIL SIDE)

F7: V IN P.C. BOARD (VEP83409C)

REF	LOC	REF	LOC	REF	LOC	REF	LOC	REF	LOC	REF	LOC	REF	LOC	REF	LOC	REF	LOC	REF	LOC	REF	LOC	REF	LOC
IC101	I4	IC351	I3	IC461	H1	IC552	F4	IC755	A2	IC904	A3	P1	G5	Q753	C2	TP351	I3	VR351	I3	VR513	F1	VR802	B1
IC102	I4	IC352	I3	IC462	I1	IC553	F3	IC756	D2	IC905	B3	P2	D5	Q754	C2	TP501	G2	VR451	I2	VR514	E1	VR803	A1
IC103	I5	IC353	I3	IC463	H2	IC554	G3	IC757	D2	IC911	E3	Q452	H2	Q755	C2	TP502	G2	VR452	H2	VR515	F1	VR804	B1
IC104	I4	IC354	I3	IC502	H3	IC555	G3	IC758	D2	IC912	F3	Q501	H1	Q756	A2	TP503	H2	VR453	I1	VR516	F1	VR951	E3
IC201	F4	IC355	H3	IC503	G3	IC601	E1	IC759	A2	IC913	E2	Q509	G1	Q803	C1	TP504	G3	VR454	I1	VR601	D1	VR952	E2
IC207	E4	IC356	H3	IC504	G1	IC602	E2	IC802	A1	IC952	E4	Q512	F1	Q804	C1	TP601	E2	VR455	H1	VR602	D1		
IC208	D4	IC401	G4	IC505	G1	IC603	E1	IC805	A2	IC953	E3	Q514	E1	Q805	C1	TP602	F3	VR501	H1	VR701	A3		
IC209	F4	IC402	G3	IC507	G2	IC604	E2	IC806	D1	IC954	D4	Q515	F1	Q902	B3	TP603	E1	VR502	H1	VR702	C1		
IC210	F4	IC403	H4	IC508	H2	IC605	E2	IC807	D1	IC955	D3	Q652	D2	Q955	E4	TP701	A3	VR503	G2	VR703	C3		
IC251	D4	IC404	H4	IC509	F2	IC606	E1	IC808	D1	IC956	D3	Q654	D1	TG1	H3	TP751	A2	VR504	H1	VR704	D3		
IC252	D4	IC450	H2	IC510	G2	IC607	E3	IC809	A1	IC957	D2	Q655	D1	TG2	F3	TP801	A1	VR505	F1	VR751	A2		
IC253	C3	IC451	I2	IC513	H3	IC608	E1	IC851	B4	IC981	A4	Q657	D2	TG3	D3	TP951	F3	VR507	G1	VR752	C1		
IC254	C4	IC457	H2	IC515	F1	IC702	A3	IC901	C4	IC984	A3	Q658	D2	TG4	E2	TP952	E3	VR510	F1	VR753	A2		
IC259	C4	IC458	H2	IC516	F1	IC705	A3	IC902	C4	IC985	B5	Q703	C3	TG5	B1	VL601	E2	VR511	G1	VR754	C2		
IC303	I4	IC459	I1	IC551	F3	IC752	B2	IC903	B3	IC986	A5	Q704	C3	TG6	E4	VR301	J4	VR512	G2	VR801	B1		

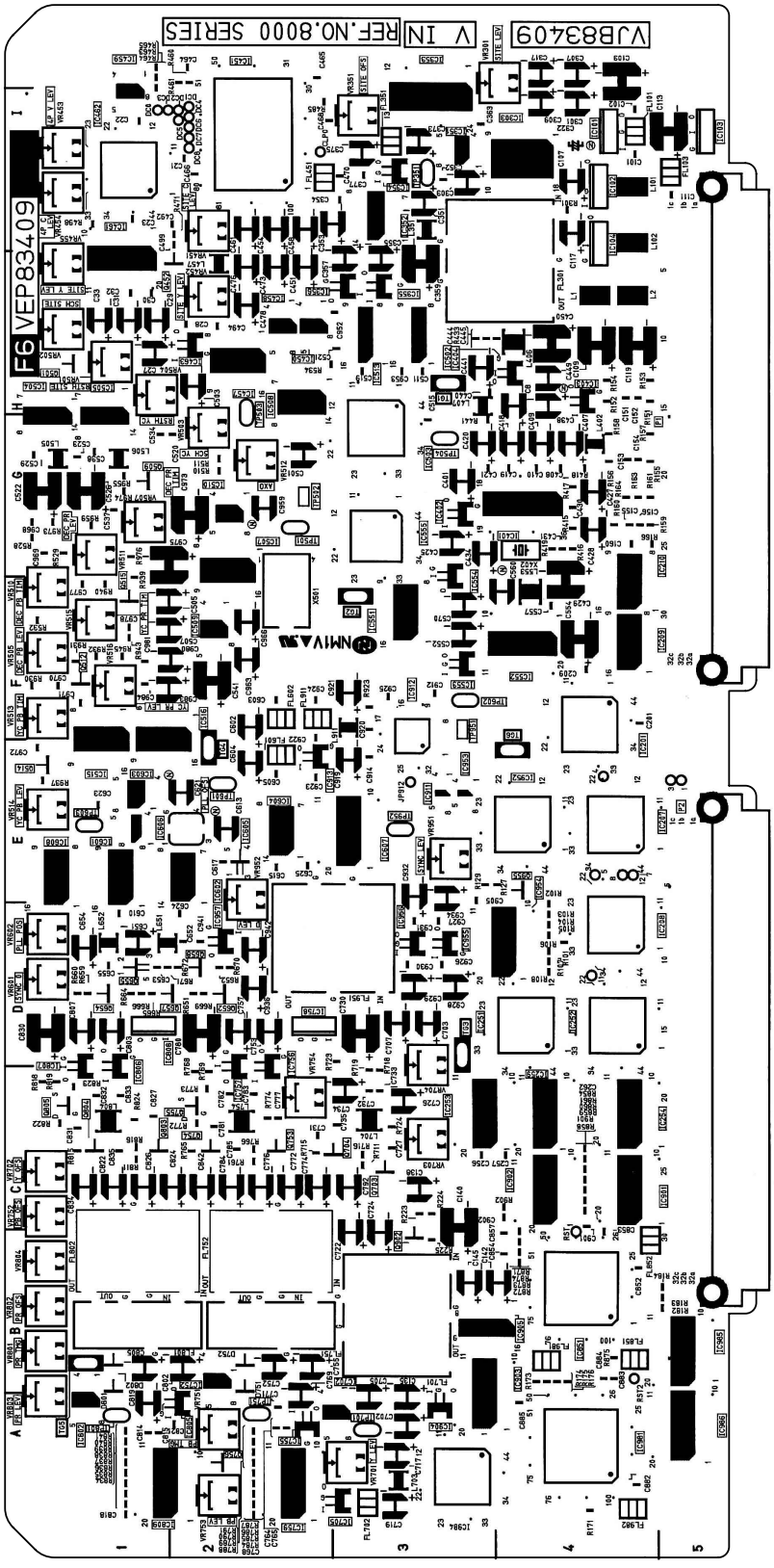

(CON

H1: EQ1 P.C. BOARD (VEP85184C)
H2: EQ2 P.C. BOARD (VEP85184D)

REF	LOC	REF	LOC	REF	LOC
IC5008	D4	Q5327	B2	Q5614	C3
Q5302	B4	Q5328	A2	Q5615	C3
Q5303	B4	Q5329	A1	Q5616	B3
Q5304	B4	Q5330	A1	Q5619	C2
Q5305	B4	Q5331	B1	Q5620	B2
Q5306	B4	Q5350	D2	Q5621	C2
Q5308	B4	Q5351	D2	Q5626	C2
Q5312	B3	Q5353	C1	Q5627	C2
Q5313	B3	Q5602	C4	Q5628	B2
Q5314	B3	Q5603	C4	Q5629	B1
Q5315	B3	Q5604	C4	Q5630	B1
Q5316	A3	Q5605	C4	Q5631	C1
Q5319	B2	Q5606	B4	Q5650	E2
Q5320	B2	Q5608	C4	Q5651	E2
Q5321	B2	Q5612	C3	Q5653	D1
Q5326	B2	Q5613	C3		

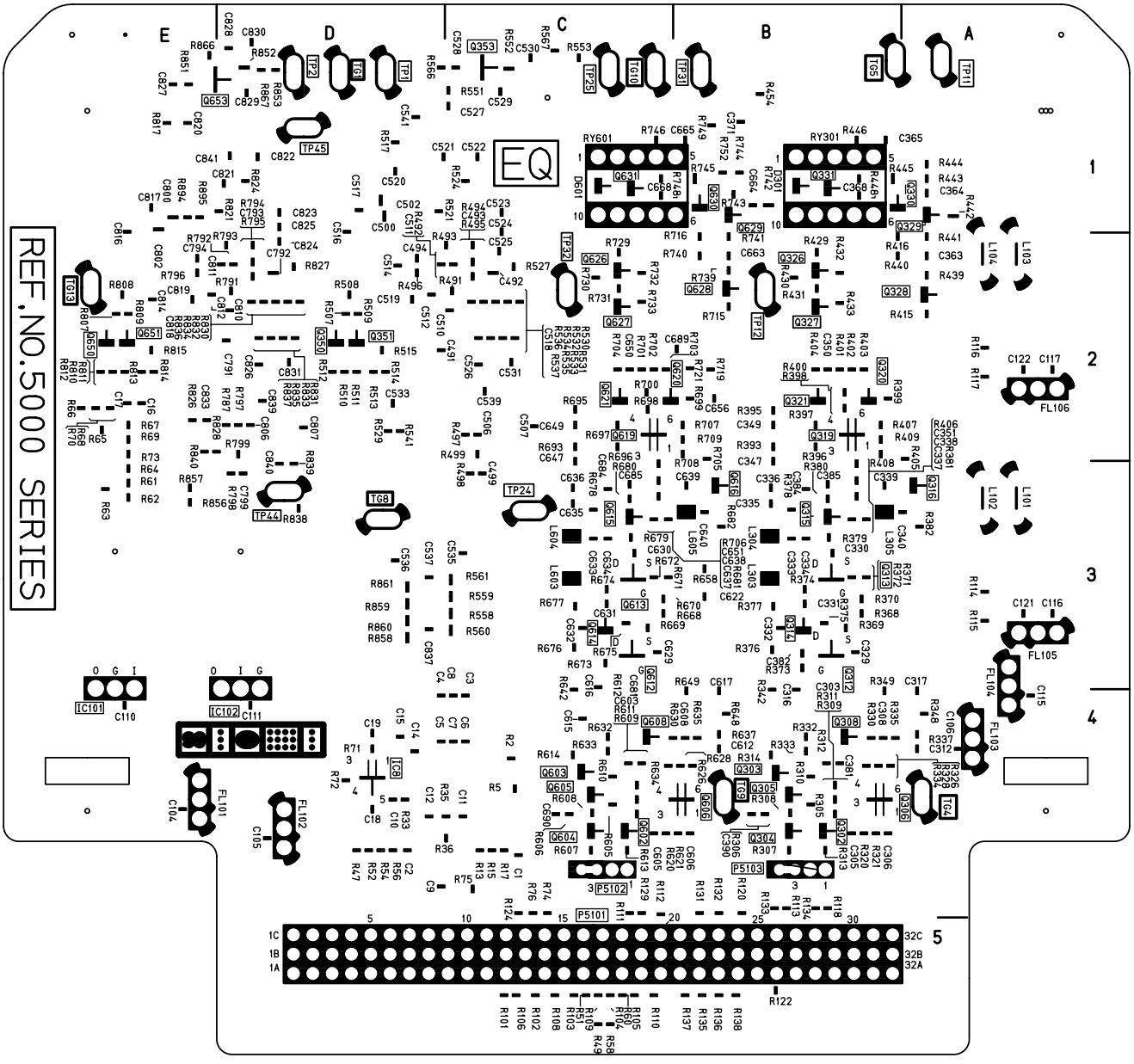

(FOIL SIDE)

H1: EQ1 P.C. BOARD (VEP85184C)
H2: EQ2 P.C. BOARD (VEP85184D)

REF	LOC	REF	LOC	REF	LOC	REF	LOC	REF	LOC	REF	LOC	REF	LOC
IC5001	C4	IC5311	C2	Q5001	D4	Q5617	B3	TP5011	A1	TP5302	D1	TP5608	E1
IC5002	D4	IC5312	D2	Q5002	D4	Q5618	C3	TP5012	B2	TP5303	D1	TP5609	E1
IC5003	C4	IC5313	C2	Q5301	B4	Q5622	B2	TP5014	B1	TP5304	D1	TP5610	E1
IC5004	D4	IC5314	C1	Q5307	B4	Q5623	C2	TP5020	C3	TP5305	D1	TP5611	D1
IC5005	C4	IC5315	D3	Q5309	B4	Q5624	B2	TP5021	D2	TP5306	C2	TP5612	D3
IC5006	D4	IC5601	C3	Q5310	B4	Q5625	C2	TP5023	C3	TP5307	D1		
IC5007	E2	IC5602	B3	Q5311	B3	Q5652	E2	TP5024	C3	TP5308	D1		
IC5101	E3	IC5603	C2	Q5317	A3	SW5300	D2	TP5025	C1	TP5309	D1		
IC5102	D3	IC5604	C2	Q5318	B3	SW5600	E2	TP5030	B4	TP5310	D1		
IC5103	A3	IC5605	B2	Q5322	B2	TG5001	D1	TP5031	B1	TP5311	C1		
IC5104	A2	IC5607	B1	Q5323	B2	TG5004	A4	TP5032	C2	TP5312	C3		
IC5301	B3	IC5610	D1	Q5324	B2	TG5005	B1	TP5034	B1	TP5600	D2		
IC5302	B3	IC5611	D2	Q5325	B2	TG5008	D3	TP5040	D3	TP5601	E1		
IC5303	B2	IC5612	E2	Q5352	D2	TG5009	B4	TP5041	E2	TP5602	E1		
IC5304	B2	IC5613	D2	Q5601	C4	TG5010	C1	TP5043	D3	TP5603	E1		
IC5305	A2	IC5614	D1	Q5607	B4	TG5013	E2	TP5044	D3	TP5604	E1		
IC5306	B1	P5101	C5	Q5609	C4	TP5001	D1	TP5045	D1	TP5605	E1		
IC5307	C1	P5102	C4	Q5610	B4	TP5002	D1	TP5300	C2	TP5606	D2		
IC5310	D1	P5103	B4	Q5611	C3	TP5010	B4	TP5301	D1	TP5607	E1		

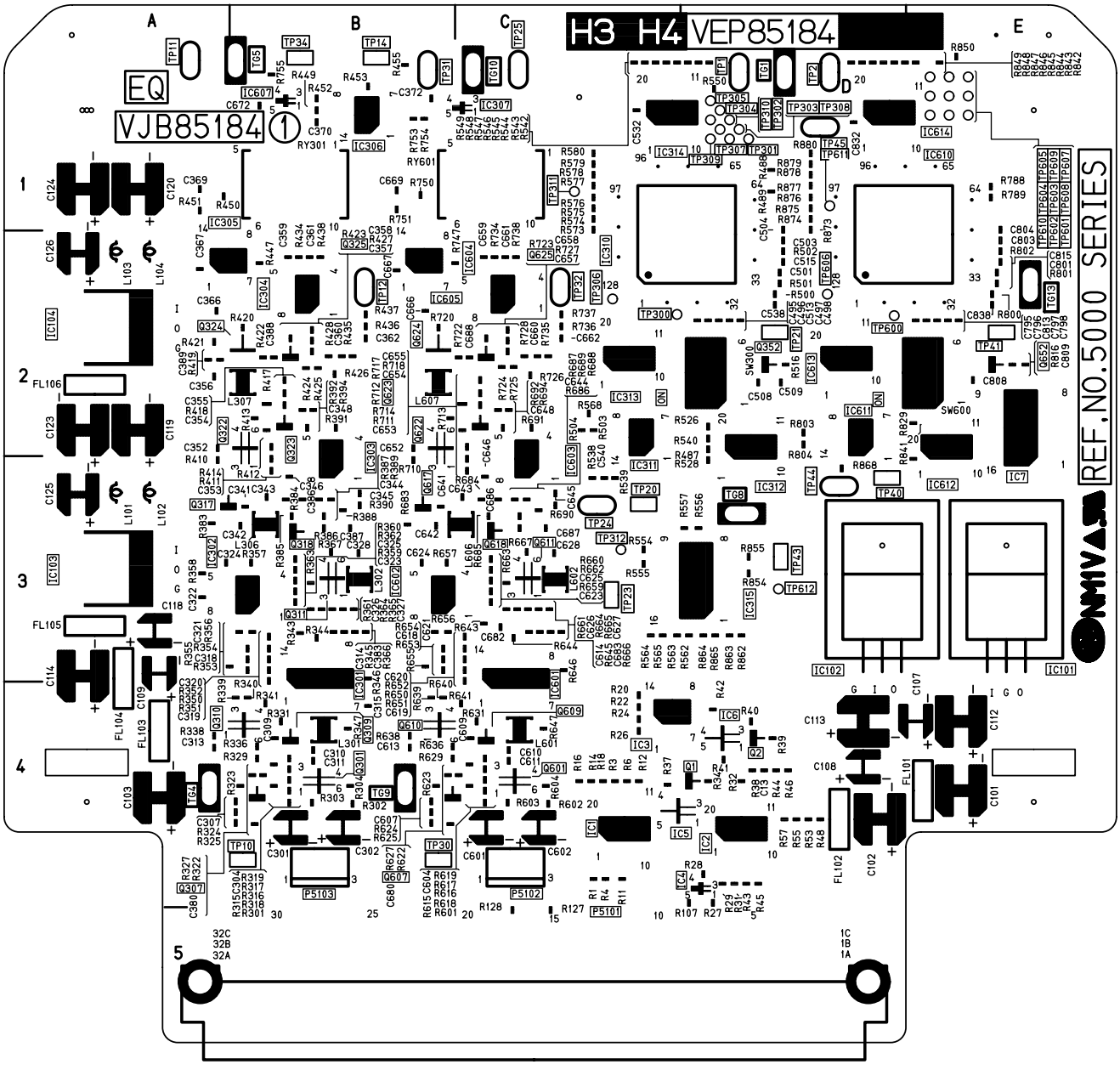

(COMPONENT SIDE)

H3: EQ MAIN P.C. BOARD (VEP85185B)

REF	LOC	REF	LOC	REF	LOC
IC5006	C3	Q5307	B4	Q5603	B2
IC5007	D3	Q5308	B3	Q5607	B2
IC5020	B4	Q5313	B3	QR5002	D3
IC5021	B4	Q5317	B3	QR5003	E3
IC5022	B4	Q5318	B3	QR5301	A1
IC5030	E2	Q5320	B3		
IC5033	D1	Q5321	B3		
IC5034	D1	Q5324	B2		
IC5315	D2	Q5327	A2		
Q5003	D4	Q5328	B2		
Q5231	E2	Q5350	D1		
Q5251	E2	Q5351	D2		
Q5302	B4	Q5352	D2		
Q5303	B4	Q5353	C2		
Q5304	B4	Q5601	B2		
Q5305	B4	Q5602	B2		

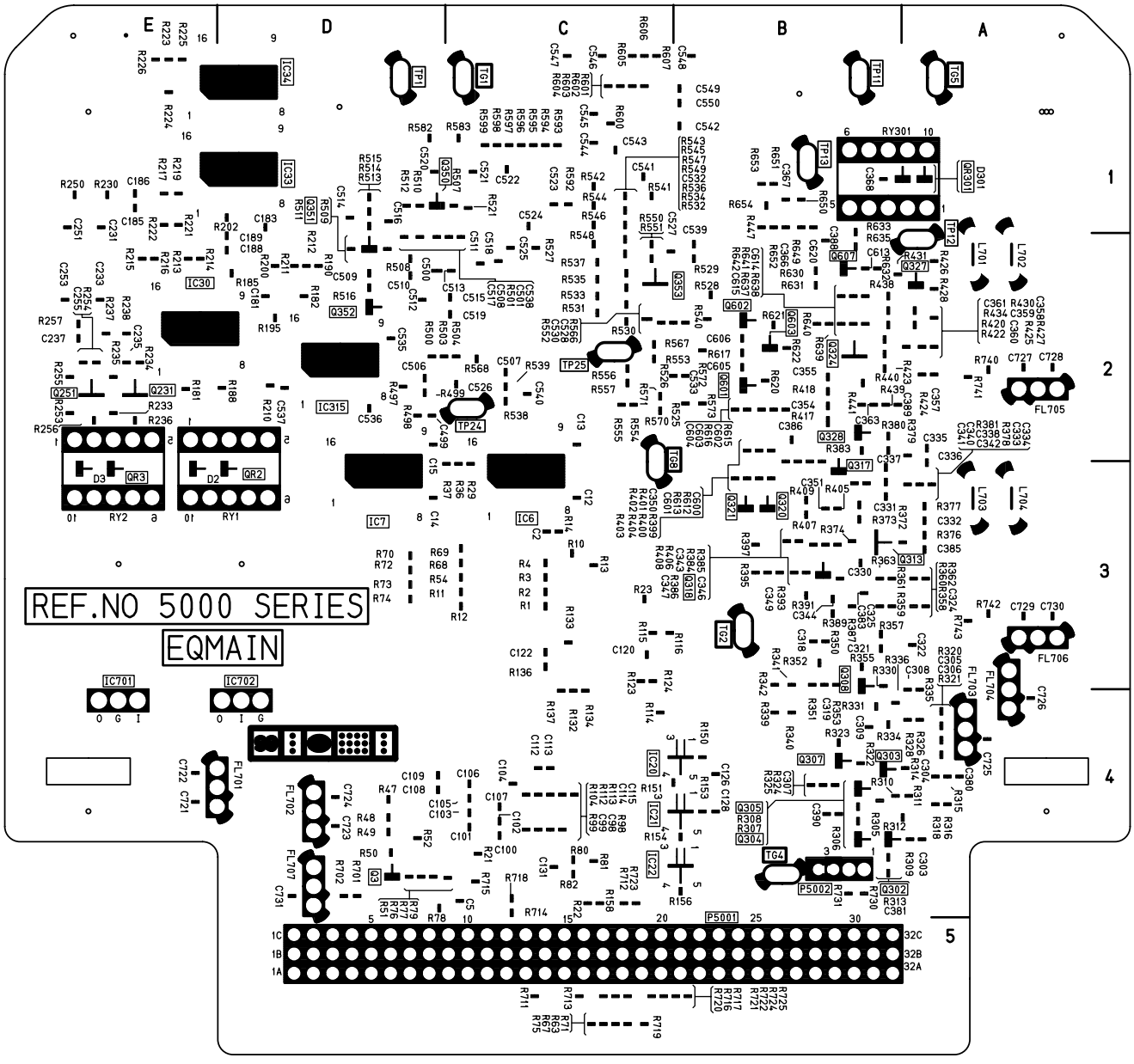

(FOIL SIDE)

H3: EQ MAIN P.C. BOARD (VEP85185B)

REF	LOC	REF	LOC	REF	LOC	REF	LOC	REF	LOC	REF	LOC
IC5001	C3	IC5040	E1	IC5703	A2	Q5326	A2	TP5004	D2	TP5305	C1
IC5002	C4	IC5041	E2	IC5704	A3	Q5329	B2	TP5005	D2	TP5306	C2
IC5003	C3	IC5042	E2	P5001	C5	Q5330	B3	TP5006	E2	TP5308	D1
IC5004	C3	IC5050	E1	P5002	B4	Q5600	B2	TP5007	E2	TP5309	C1
IC5005	C3	IC5051	E2	Q5001	C3	Q5604	B2	TP5010	B4	TP5310	C1
IC5008	B3	IC5301	B3	Q5002	D4	Q5605	B2	TP5011	B1	TP5311	C1
IC5009	C3	IC5302	A3	Q5230	E2	Q5606	B2	TP5012	A1	TP5312	C2
IC5010	C3	IC5303	B3	Q5250	E2	QR5001	C3	TP5013	B1	TP5313	C1
IC5011	C3	IC5304	A2	Q5301	A4	QR5081	B4	TP5020	D3	TP5314	C1
IC5012	C4	IC5305	B1	Q5306	A4	QR5082	B4	TP5021	D2	TP5315	C1
IC5013	C4	IC5310	C1	Q5309	B4	SW5001	C3	TP5023	C2		
IC5014	C4	IC5311	C2	Q5310	A3	SW5002	C2	TP5024	C2		
IC5015	C4	IC5312	B2	Q5311	B3	SW5003	C1	TP5025	C2		
IC5016	D4	IC5313	C2	Q5312	B3	TG5001	C1	TP5026	D1		
IC5017	C3	IC5314	C1	Q5314	A3	TG5002	B3	TP5101	C4		
IC5018	C3	IC5316	B2	Q5315	A2	TG5004	B4	TP5102	C4		
IC5019	C3	IC5317	C1	Q5316	B3	TG5005	A1	TP5300	C2		
IC5031	D2	IC5600	B2	Q5319	B3	TG5008	C3	TP5301	D1		
IC5032	D1	IC5601	B1	Q5322	B3	TP5001	D1	TP5302	C1		
IC5035	E1	IC5701	E4	Q5323	B2	TP5002	D3	TP5303	C1		
IC5036	E1	IC5702	D4	Q5325	A2	TP5003	D3	TP5304	C1		

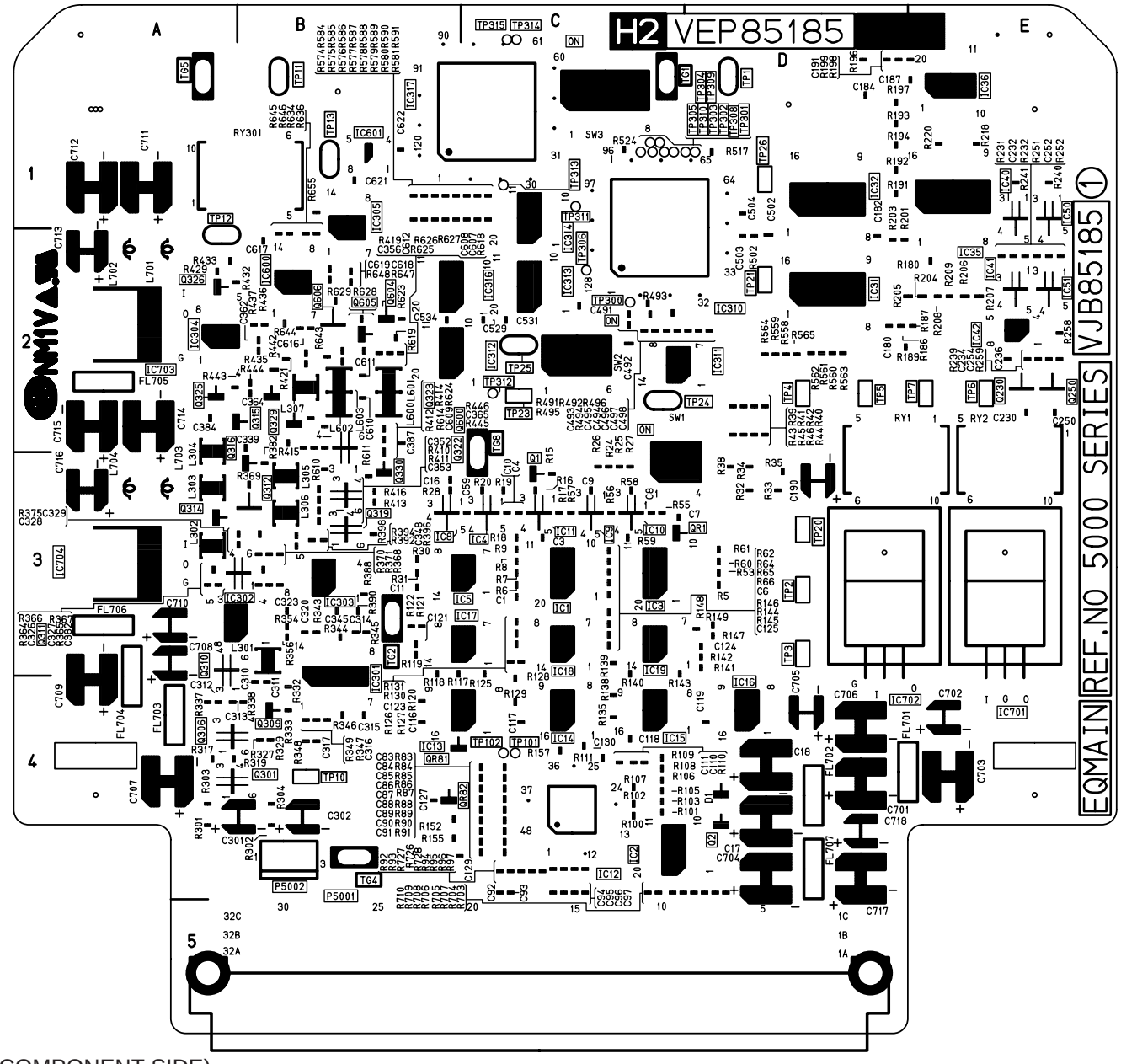

(COMPONENT SIDE)

H5: A MONI MIC P.C. BOARD (VEP84366A)

REF	LOC	REF	LOC	REF	LOC
IC3	E2	IC343	A2	Q343	A2
IC55	E2	IC346	A3	Q344	A2
IC57	E4	Q1	B1	QR1	B1
IC58	E4	Q2	B1	QR2	B1
IC59	E4	Q4	C1	QR3	C1
IC60	D4	Q6	D1	QR103	D2
IC102	D1	Q7	D1	QR104	C2
IC108	D3	Q103	D2	QR341	A3
IC109	C3	Q104	C2	QR342	A3
IC112	D4	Q106	B4	QR343	A2
IC113	D4	Q209	C4	QR344	A2
IC114	C4	Q210	B4		
IC115	D4	Q211	D4		
IC201	D3	Q212	C4		
IC202	B3	Q341	A2		
IC307	B1	Q342	A2		

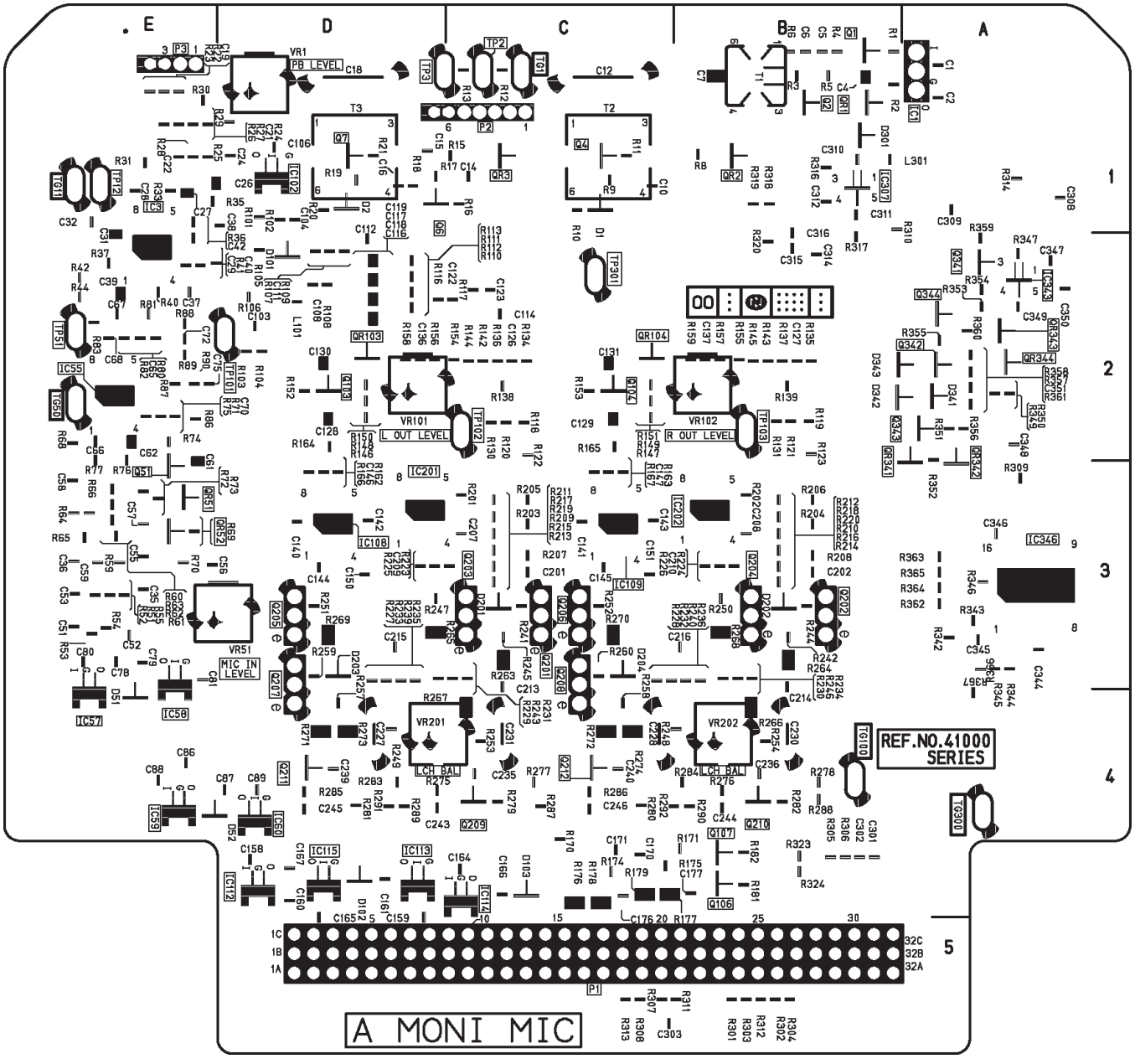

(FOIL SIDE)

H5: A MONI MIC P.C. BOARD (VEP84366A)

REF	LOC	REF	LOC	REF	LOC	REF	LOC	REF	LOC
IC1	A1	IC204	B3	IC348	A2	QR101	D2	TP306	A1
IC2	E1	IC205	D3	L302	B2	QR102	C2	VR1	D1
IC4	E2	IC206	B3	L341	A4	TG1	C1	VR51	E3
IC5	E2	IC207	C4	P1	C5	TG11	E1	VR101	D2
IC51	E3	IC208	B4	P2	C1	TG50	E2	VR102	B2
IC52	E3	IC209	D4	P3	E1	TG100	B4	VR201	D4
IC53	E3	IC210	C4	Q3	B1	TG300	A4	VR202	B4
IC54	E3	IC301	B4	Q5	D1	TP2	C1		
IC56	E2	IC302	B4	Q101	C2	TP3	D1		
IC101	D2	IC303	C1	Q102	B2	TP12	E1		
IC103	C2	IC304	B1	Q105	B4	TP51	E2		
IC104	C2	IC305	A1	Q201	C3	TP101	E2		
IC105	B2	IC306	A1	Q202	B3	TP102	D2		
IC106	C2	IC308	B1	Q203	C3	TP103	B2		
IC107	B2	IC341	A3	Q204	B3	TP301	C2		
IC110	D3	IC342	A3	Q205	D3	TP302	A1		
IC111	C3	IC344	A3	Q206	C3	TP303	A1		
IC116	C4	IC345	A3	Q207	D3	TP304	A1		
IC203	C3	IC347	A2	Q208	C3	TP305	A1		

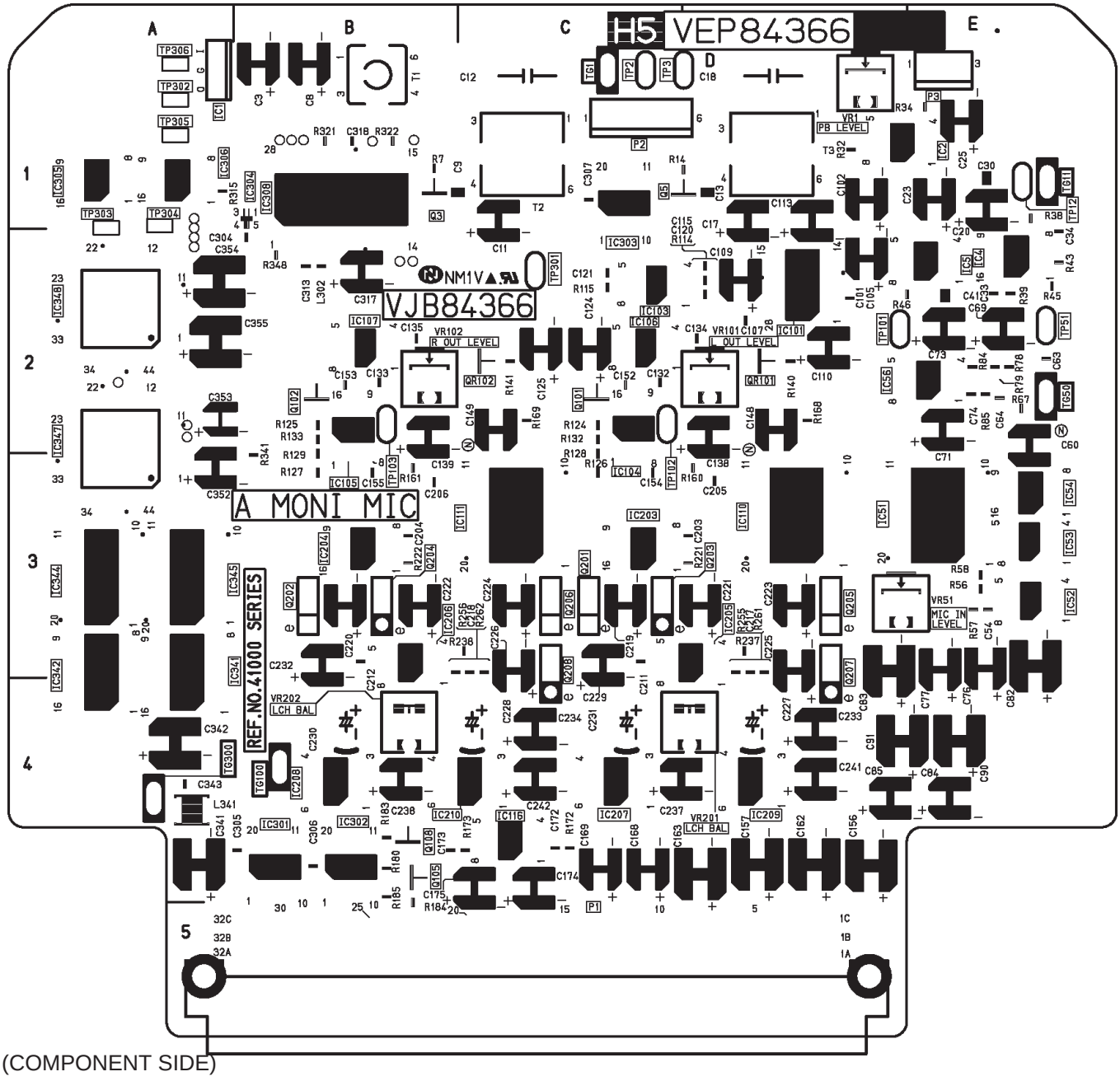

(COMPONENT SIDE)

H5: A MONI MIC P.C. BOARD (VEP84366A)

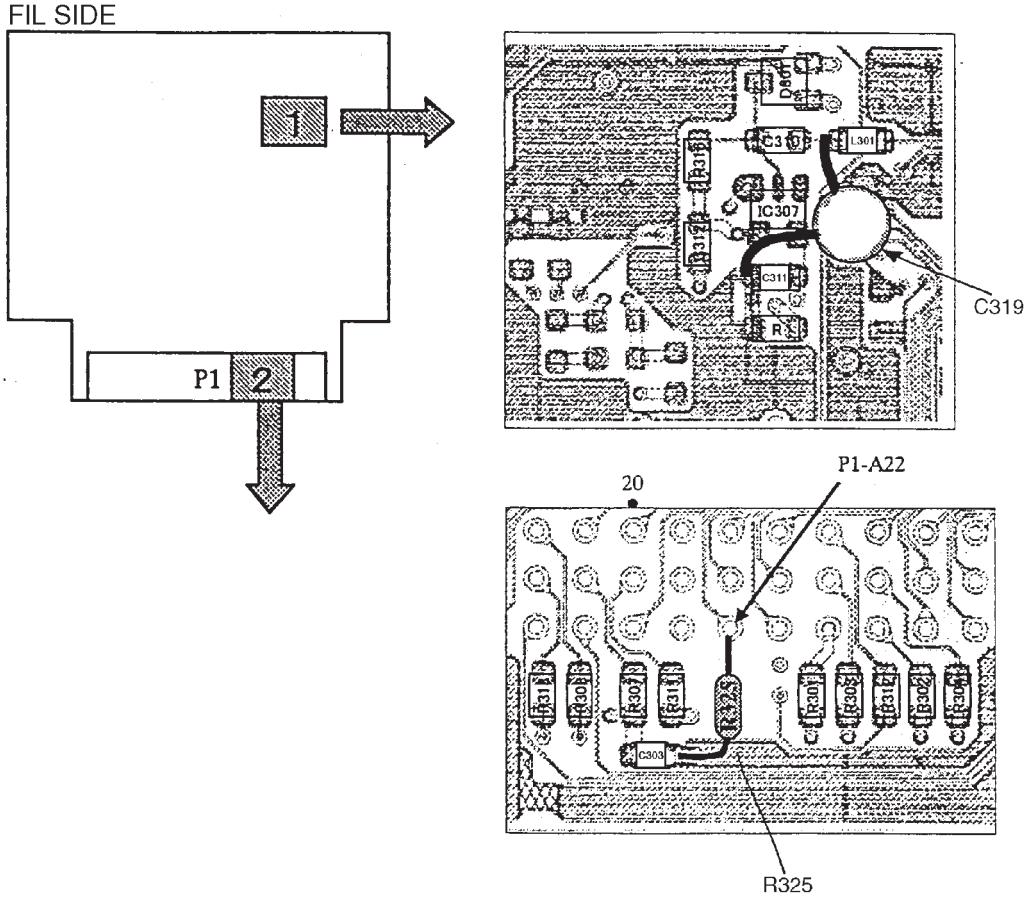

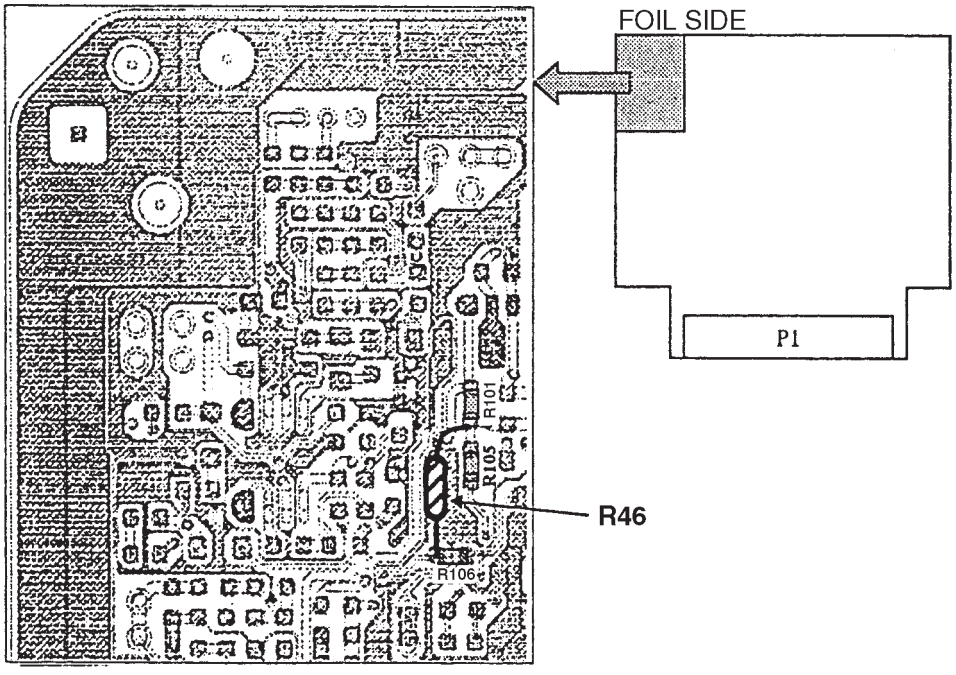

H5: A MONI MIC P.C. BOARD (VEP84366A)

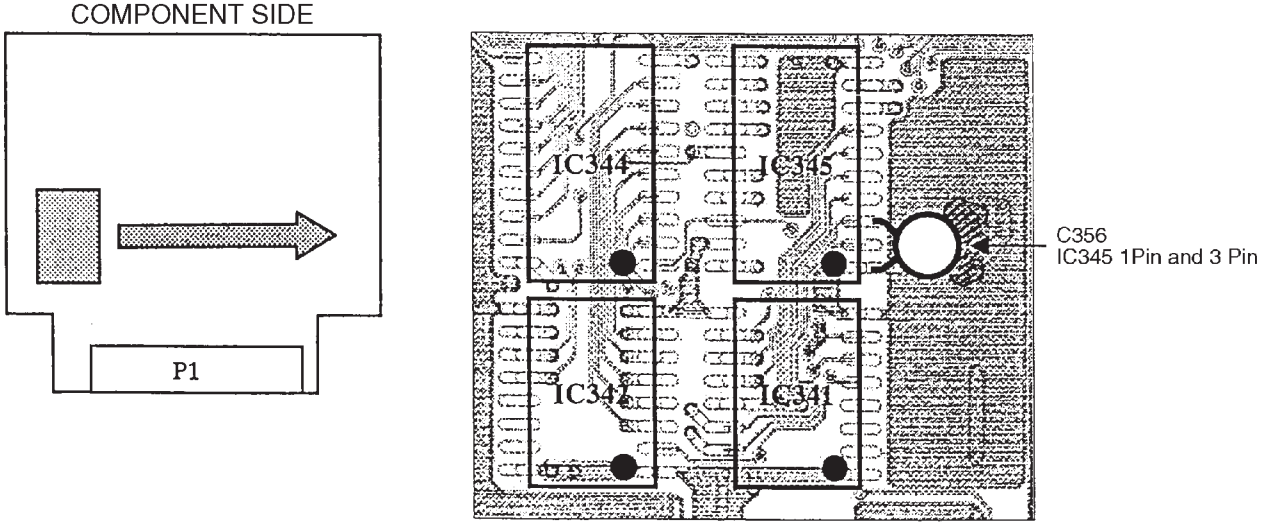

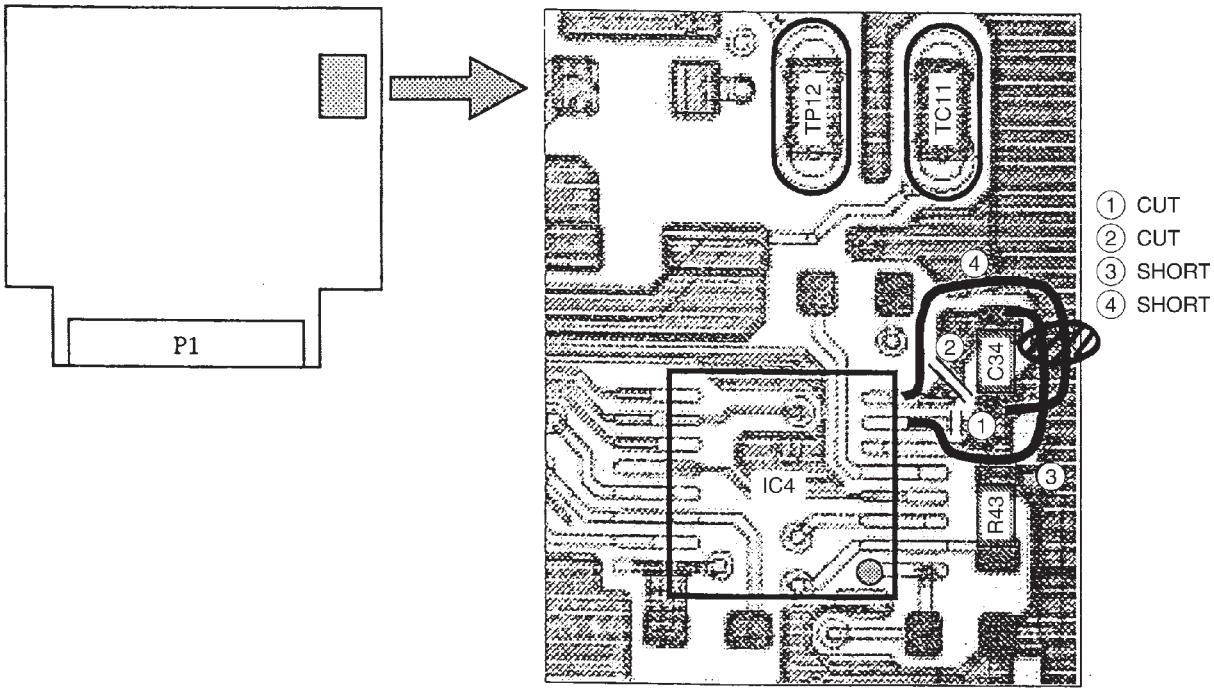

H5: A MONI MIC P.C. BOARD (VEP84366A)

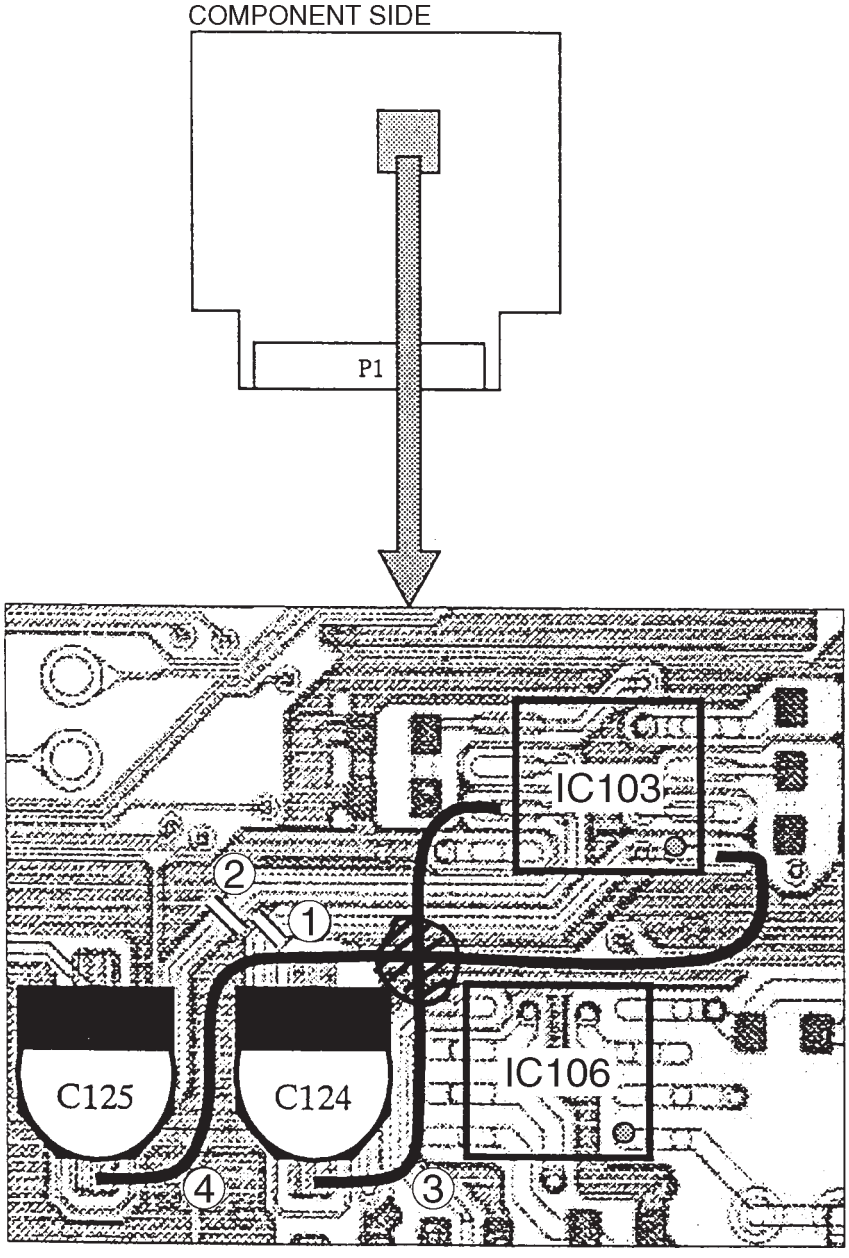

① CUT

② CUT

③ IC103(1 pin) ⇔ C124(+) SHORT

④ IC103(7 pin) ⇔ C125(+) SHORT

H6: A DA P.C. BOARD (VEP84365A)

REF	LOC	REF	LOC	REF	LOC
IC401	D1	IC601	C2	Q602	B2
IC402	B1	IC602	B2	Q611	C4
IC409	E2	IC603	C2	Q612	B4
IC410	D2	IC604	B2	Q613	C4
IC411	C2	IC605	C2	Q614	B4
IC412	B2	IC606	B2	Q701	A1
IC413	D1	IC617	C4	QR401	D1
IC414	B1	IC618	B4	QR402	B1
IC415	D1	IC701	A2	QR403	A1
IC416	B1	IC703	A2	QR404	A1
IC417	C1	IC705	A3	QR501	E2
IC501	E2	IC706	A3	QR502	D2
IC502	D2	Q501	E2	QR503	E2
IC503	D2	Q502	D2	QR504	D2
IC504	C2	Q511	E4	QR601	C2
IC505	E2	Q512	D4	QR602	B2
IC506	D2	Q513	D4	QR603	C2
IC517	D4	Q514	D4	QR604	B2
IC518	C4	Q601	C2	QR701	A1

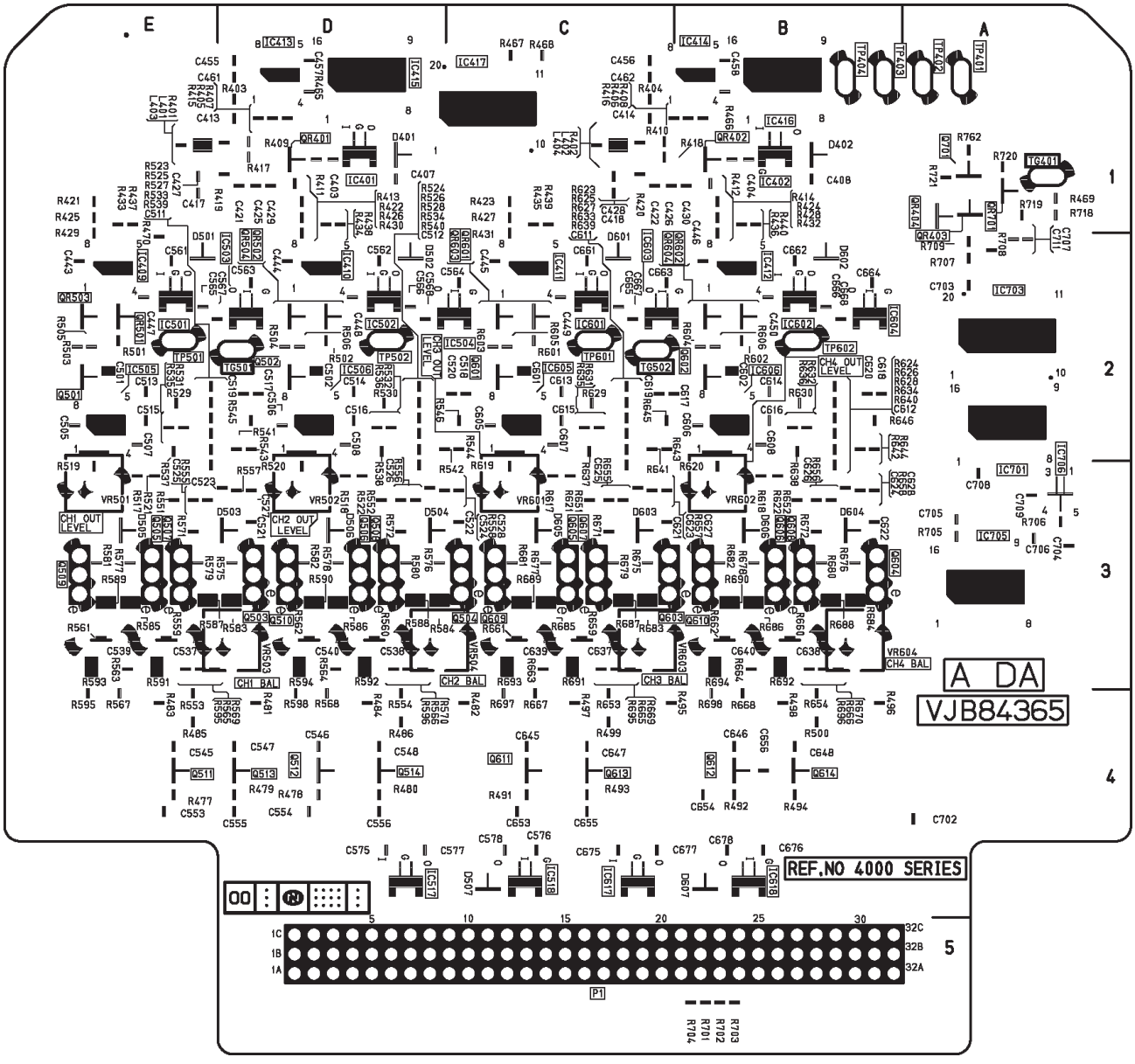

(FOIL SIDE)

H6: A DA P.C. BOARD (VEP84365A)

REF	LOC	REF	LOC	REF	LOC	REF	LOC
IC403	D1	IC610	B2	Q506	D3	TP404	B1
IC404	B1	IC611	C3	Q507	E3	TP501	E2
IC405	E2	IC612	B3	Q508	D3	TP502	D2
IC406	D2	IC613	C4	Q509	E3	TP601	C2
IC407	C2	IC614	B4	Q510	D3	TP602	B2
IC408	B2	IC615	C4	Q603	B3	VR501	E3
IC507	E2	IC616	B4	Q604	B3	VR502	D3
IC508	D2	IC702	A3	Q605	C3	VR503	D3
IC509	D2	IC704	A3	Q606	B3	VR504	D3
IC510	D2	IC707	A2	Q607	C3	VR601	C3
IC511	E3	IC708	A2	Q608	B3	VR602	B3
IC512	D3	P1	C4	Q609	C3	VR603	C3
IC513	E4	Q401	E1	Q610	B3	VR604	B3
IC514	D4	Q402	D1	TG401	A1		
IC515	E4	Q403	C1	TG501	D2		
IC516	D4	Q404	B1	TG502	C2		
IC607	C2	Q503	D3	TP401	A1		
IC608	B2	Q504	C3	TP402	A1		
IC609	C2	Q505	E3	TP403	B1		

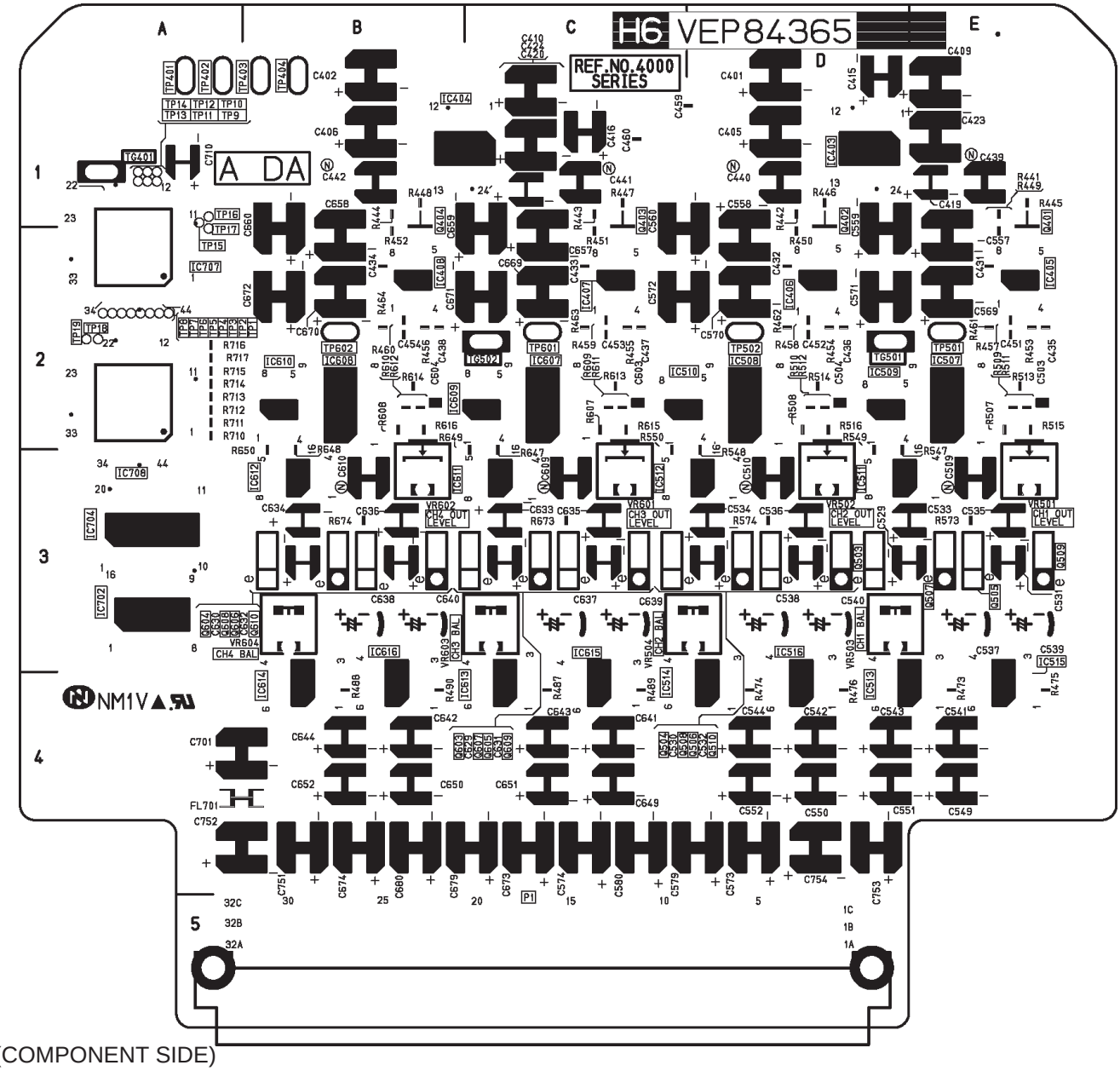

(COMPONENT SIDE)

H6: A DA P.C. BOARD (VEP84365A)

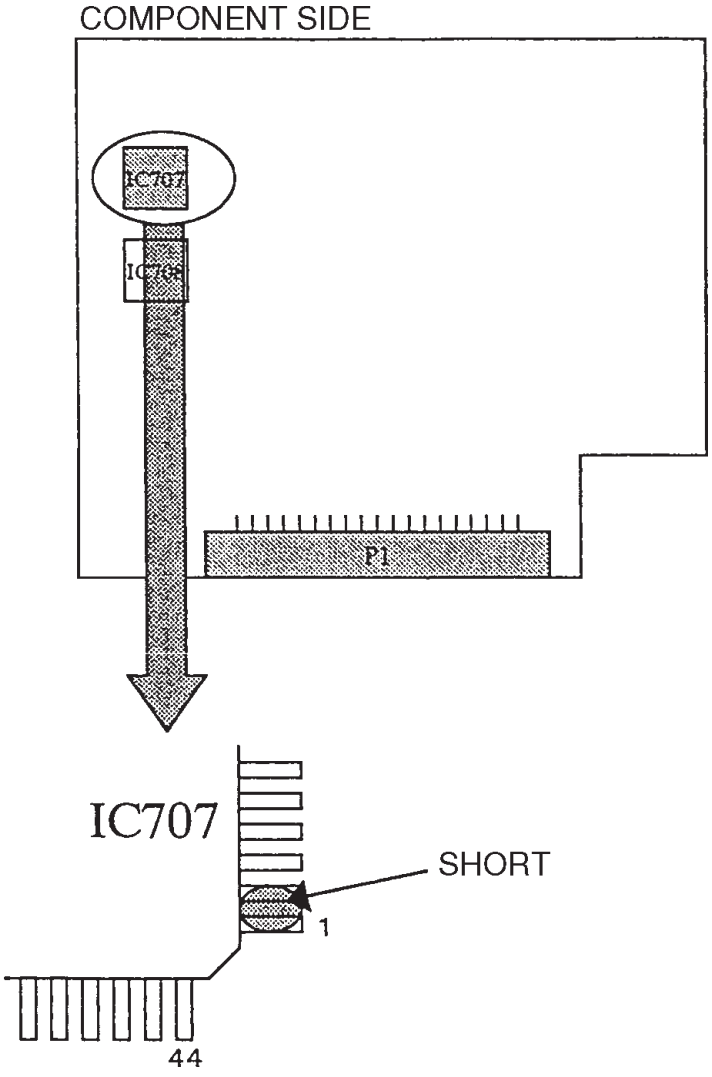

H7: A AD P.C. BOARD (VEP84364A)

REF	LOC	REF	LOC
IC1	D4	IC209	C1
IC2	D4	IC305	A2
IC7	D3	IC306	A3
IC9	E3	Q1	E2
IC51	C4	Q51	D2
IC52	C4	Q101	C2
IC57	C3	Q151	B2
IC59	D3	QR1	D2
IC91	E2	QR2	D2
IC92	E2	QR51	C2
IC101	C4	QR52	D2
IC102	C4	QR101	C2
IC107	C3	QR102	C2
IC109	C3	QR151	B2
IC151	B4	QR152	B2
IC157	B3		
IC159	B3		
IC207	E1		
IC208	B1		

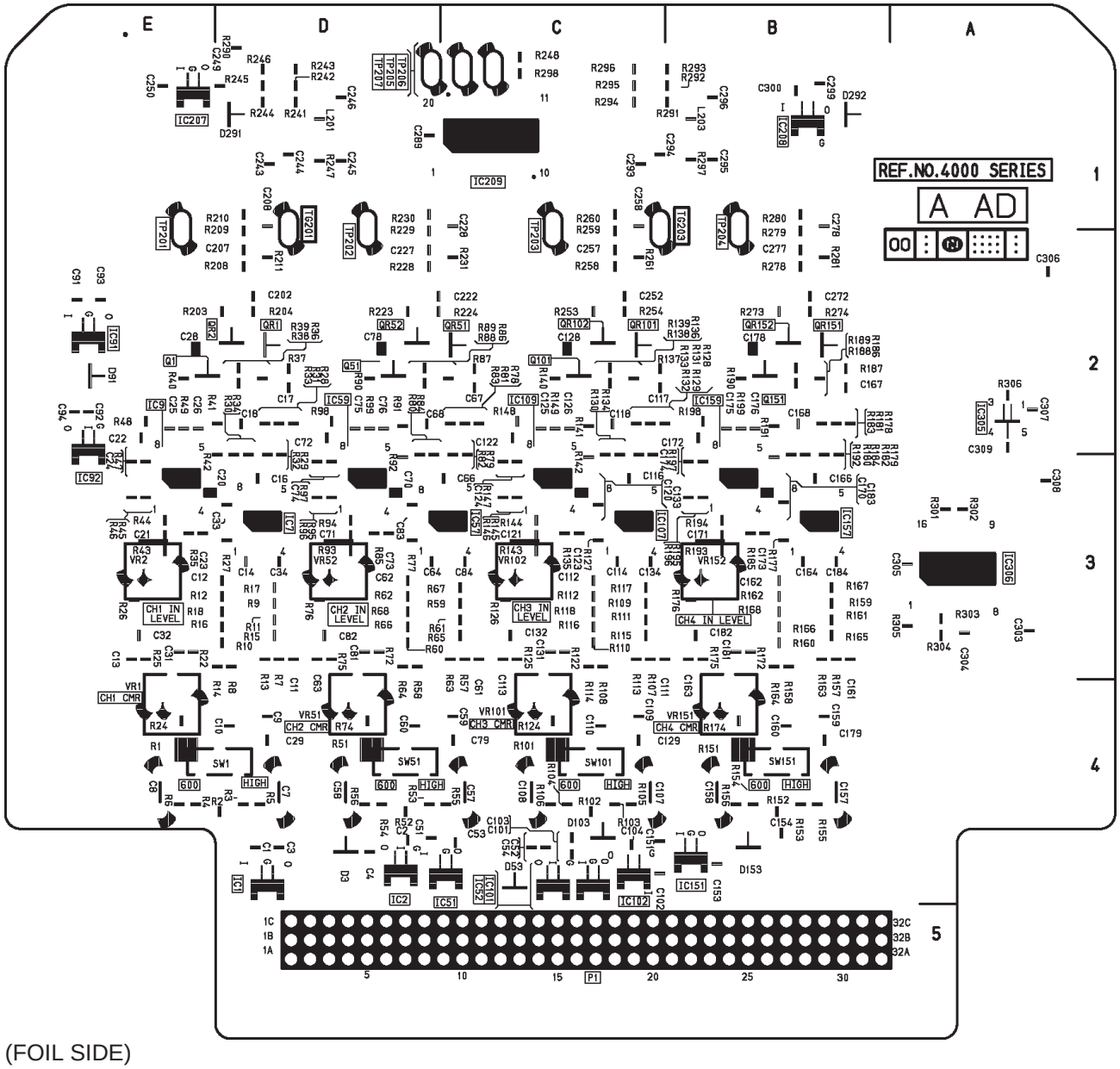

(FOIL SIDE)

H7: A AD P.C. BOARD (VEP84364A)

REF	LOC	REF	LOC	REF	LOC
IC3	D4	IC156	B3	TG201	D1
IC4	D3	IC158	B2	TG203	C1
IC5	E3	IC201	D2	TP201	E1
IC6	D3	IC202	D2	TP202	D1
IC8	D2	IC203	C2	TP203	C1
IC53	D4	IC204	B2	TP204	B1
IC54	D3	IC205	D1	TP205	C1
IC55	D3	IC206	B1	TP206	C1
IC56	D3	IC301	A3	TP207	D1
IC58	D2	IC302	A3	VR1	E4
IC103	C4	IC303	A3	VR2	E3
IC104	C3	IC304	A3	VR51	D4
IC105	C3	IC307	A2	VR52	D3
IC106	C3	IC308	A3	VR101	C4
IC108	C2	P1	C5	VR102	C3
IC152	B4	SW1	E4	VR151	B4
IC153	B4	SW51	D4	VR152	B3
IC154	B3	SW101	C4		
IC155	B3	SW151	B4		

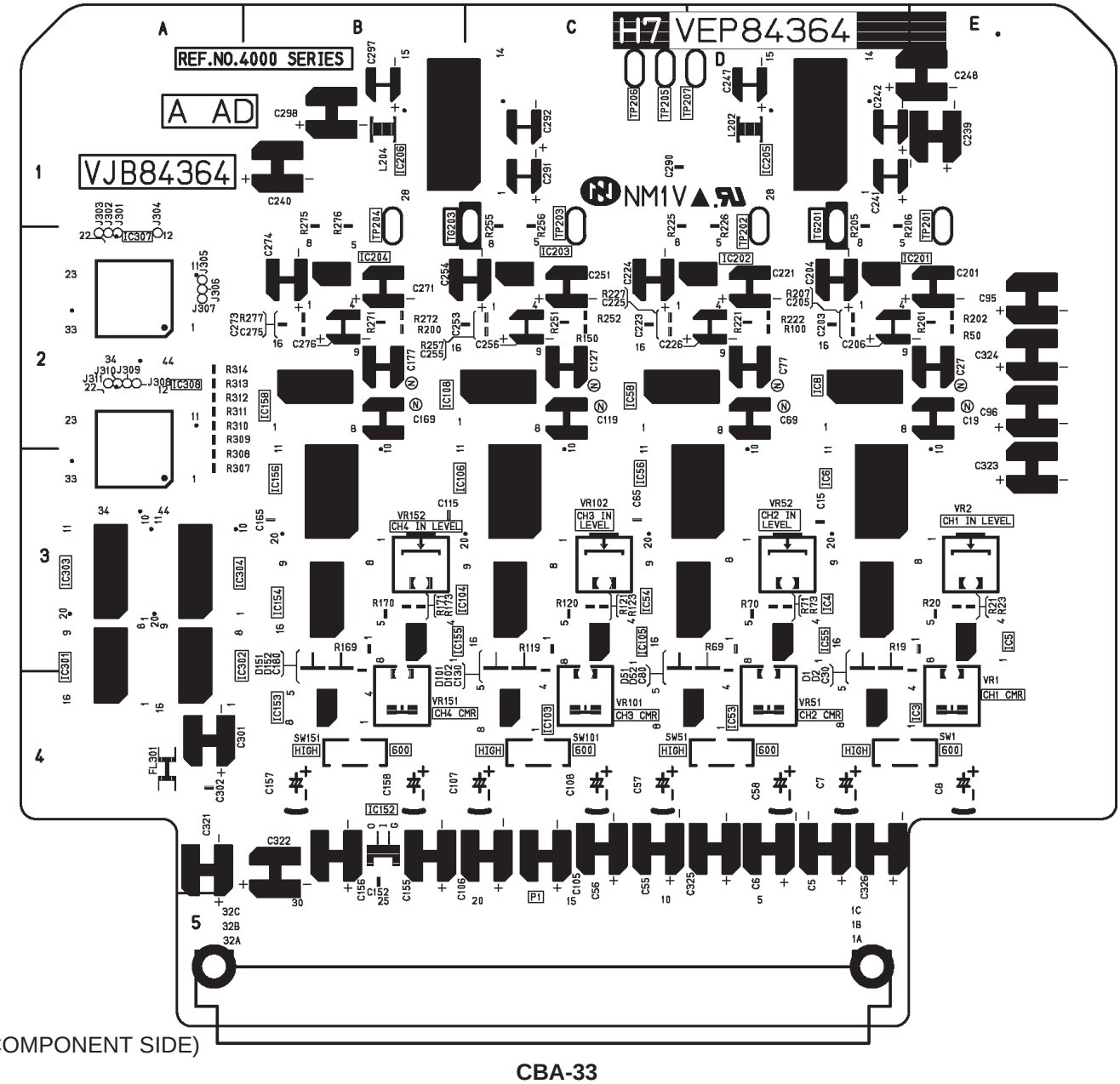

(COMPONENT SIDE)

HEAD BUFFER1 P.C. BOARD (VEP85189A)

REF	LOC	REF	LOC	REF	LOC
IC5101	C1	Q5104	E1	Q5423	C2
IC5102	C1	Q5107	E2	Q5425	C2
IC5105	E1	Q5108	E2	Q5426	C1
IC5106	E2	Q5301	D2	Q5429	B2
IC5201	D2	Q5302	D2	Q5430	C2
IC5202	D3	Q5303	E2	Q5433	C3
IC5207	E2	Q5304	E2	Q5434	C2
IC5301	D2	Q5305	E3	Q5435	C2
IC5302	D3	Q5402	B2	Q5436	C2
IC5305	E3	Q5406	B2	Q5437	C2
IC5306	E3	Q5407	B2	Q5443	C3
IC5307	E2	Q5408	B1	Q5602	A2
IC5403	B2	Q5412	B2	Q5604	A2
IC5404	B3	Q5413	B2	Q5606	A2
IC5405	B3	Q5414	B2	Q5608	A2
IC5406	B2	Q5418	B3	QR5403	B2
IC5409	C1	Q5419	B2	QR5404	B1
P5002	B1	Q5420	B2	QR5405	C1
Q5103	E1	Q5422	B3	QR5407	B2

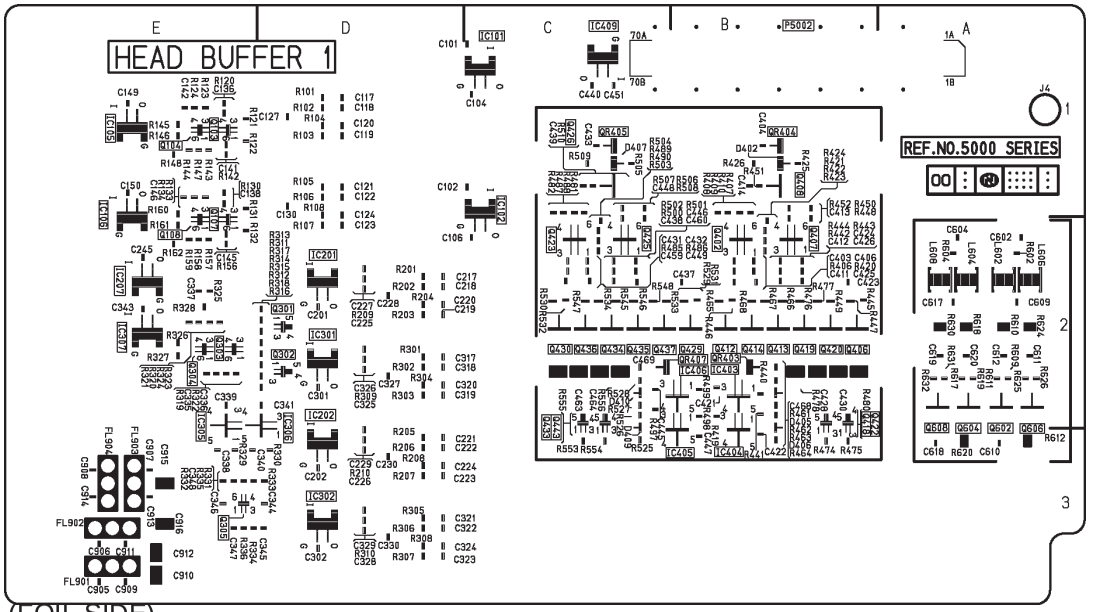

(FOIL SIDE)

REF	LOC	REF	LOC	REF	LOC	REF	LOC
IC5103	D1	Q5105	E1	Q5427	B2	TP5402	B1
IC5104	D1	Q5106	E1	Q5428	B1	TP5403	C1
IC5203	D2	Q5201	D2	Q5431	B2	TP5404	B2
IC5204	D3	Q5202	D2	Q5432	B2	TP5601	A3
IC5205	E2	Q5203	E2	Q5438	B2	TP5602	A3
IC5206	E2	Q5204	E2	Q5439	B2	TP5603	B3
IC5303	D2	Q5205	E3	Q5440	B2	TP5604	A3
IC5304	D3	Q5401	C2	Q5441	B2		
IC5401	C2	Q5403	C2	Q5442	B2		
IC5402	C2	Q5404	C2	Q5444	B2		
IC5407	B2	Q5405	C1	Q5601	A2		
IC5408	B2	Q5409	C2	Q5603	A2		
IC5410	B1	Q5410	B2	Q5605	A2		
P5001	E2	Q5411	C2	Q5607	A2		
P5003	B3	Q5415	C2	QR5401	C2		
P5004	D1	Q5416	C2	QR5402	C1		
P5005	B3	Q5417	C2	QR5406	B1		
Q5101	E1	Q5421	C2	QR5408	B2		
Q5102	E1	Q5424	B2	TP5401	C2		

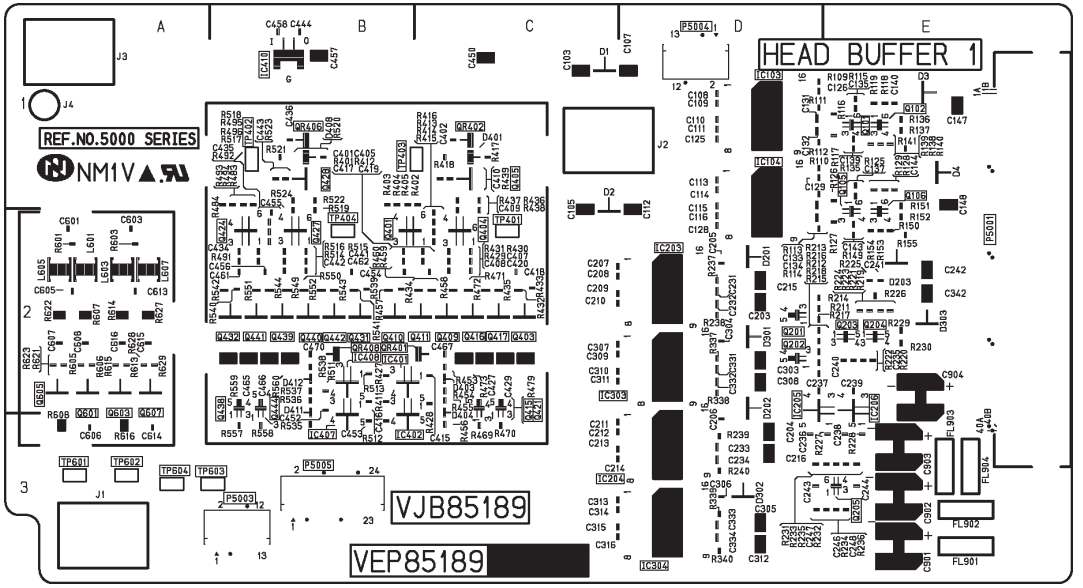

(COMPONENT SIDE)

HEAD BUFFER2 P.C. BOARD (VEP85190A)

REF	LOC	REF	LOC	REF	LOC	REF	LOC
IC5113	D2	IC5715	C1	Q5307	E1	Q5728	B2
IC5114	D2	IC5716	C3	Q5308	E1	Q5901	B3
IC5401	E2	P5001	D1	Q5701	A2	Q5902	B3
IC5403	E2	Q5107	D2	Q5702	A2	QR5401	E2
IC5404	E2	Q5108	E2	Q5703	A2	QR5501	A1
IC5405	E2	Q5109	D2	Q5704	A2		
IC5406	E2	Q5111	E2	Q5706	A2		
IC5407	E2	Q5115	D2	Q5707	A2		
IC5408	E2	Q5116	D2	Q5709	A2		
IC5409	E3	Q5117	D2	Q5710	A2		
IC5502	A1	Q5118	D2	Q5712	B2		
IC5505	B1	Q5125	D1	Q5714	B2		
IC5506	B1	Q5126	D1	Q5717	B2		
IC5701	B3	Q5301	E1	Q5718	B2		
IC5702	C3	Q5302	E1	Q5719	B2		
IC5703	B3	Q5303	E1	Q5720	B2		
IC5704	C3	Q5304	E1	Q5721	B2		
IC5713	B1	Q5305	E1	Q5722	B2		
IC5714	C3	Q5306	E1	Q5723	B2		

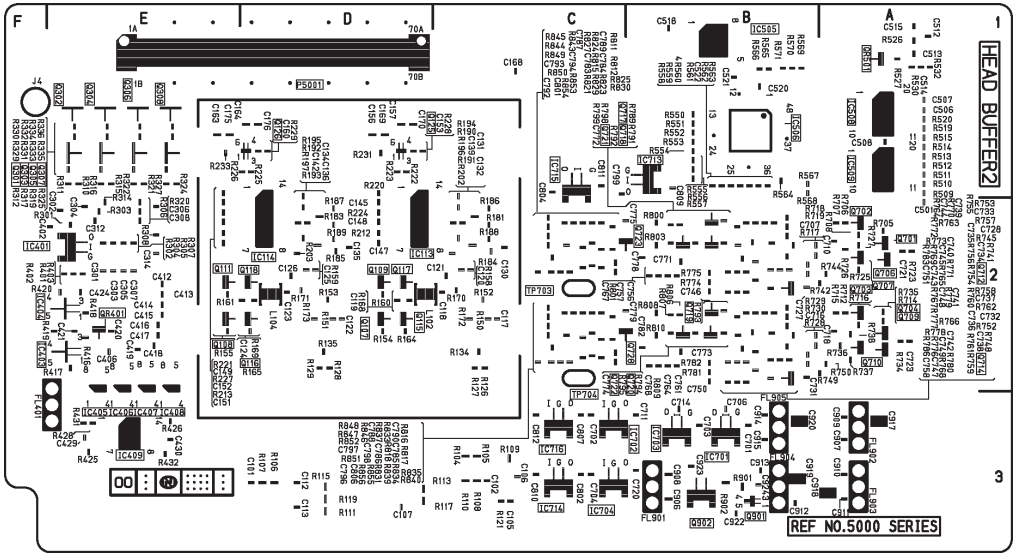

(FOIL SIDE)

REF	LOC	REF	LOC	REF	LOC	REF	LOC
IC5101	D3	P5002	A2	Q5708	A2	TP5301	E1
IC5102	D3	P5501	A1	Q5711	B2	TP5302	E1
IC5103	C3	Q5101	C2	Q5713	B2	TP5303	E1
IC5115	C1	Q5102	D2	Q5715	B2	TP5304	E1
IC5116	C1	Q5103	C2	Q5716	B2	TP5405	E3
IC5117	E1	Q5104	D2	Q5724	B2	TP5406	E3
IC5118	D1	Q5105	C2	Q5725	C2	TP5407	E3
IC5301	E2	Q5106	D2	Q5726	B2	TP5408	E3
IC5402	E2	Q5110	D2	Q5727	C2	TP5701	B2
IC5501	A1	Q5112	D2	Q5729	B2	TP5702	B2
IC5503	A1	Q5113	D2	Q5730	B2	TP5703	C2
IC5504	A1	Q5114	D2	QR5301	E1	TP5704	C2
IC5507	B1	Q5119	C2	QR5302	E1		
IC5705	B2	Q5120	D2	QR5303	E1		
IC5706	B2	Q5121	C2	QR5304	E1		
IC5707	C2	Q5122	D2	TP5101	C2		
IC5708	C2	Q5123	D2	TP5102	D2		
IC5709	C2	Q5124	E2	TP5103	D1		
IC5710	C2	Q5705	A2	TP5104	D1		

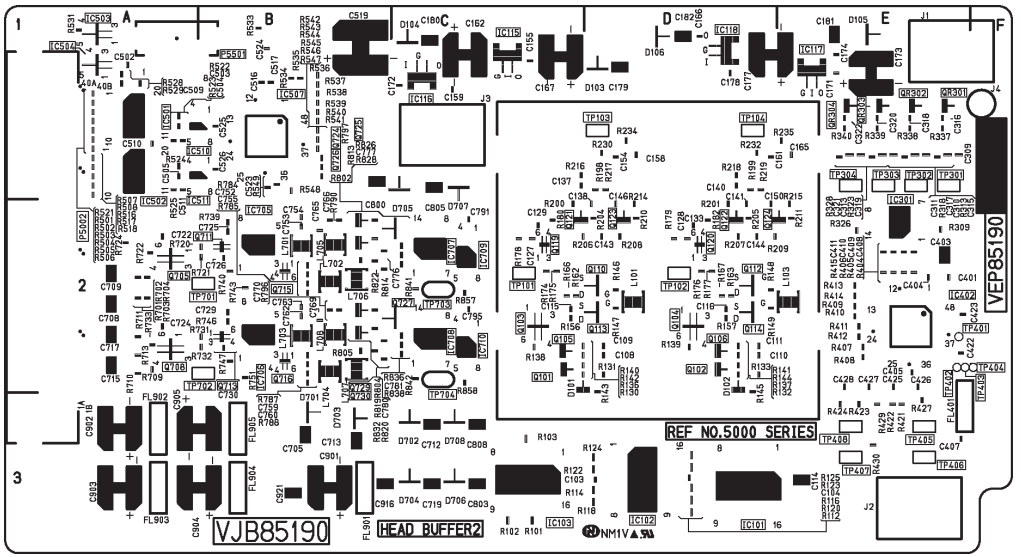

(COMPONENT SIDE)

HEAD BUFFER2 P.C. BOARD P.C. BOARD (VEP85190A)

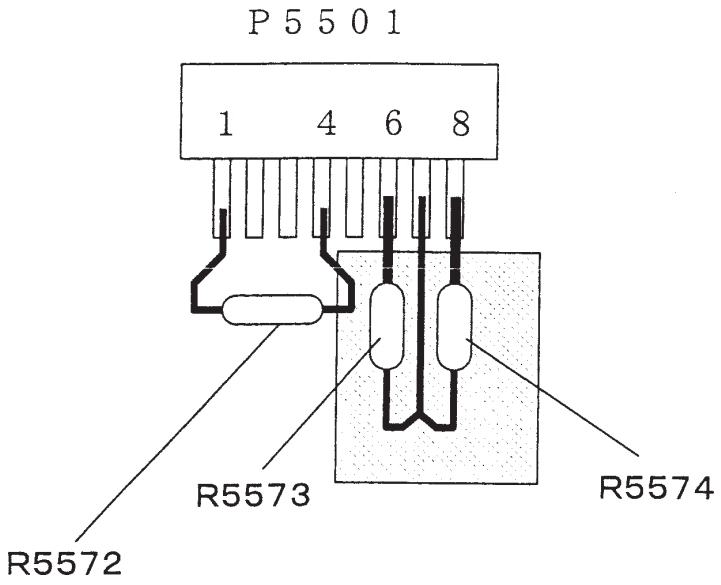

RF MOTHER P.C. BOARD (VEP85192A)

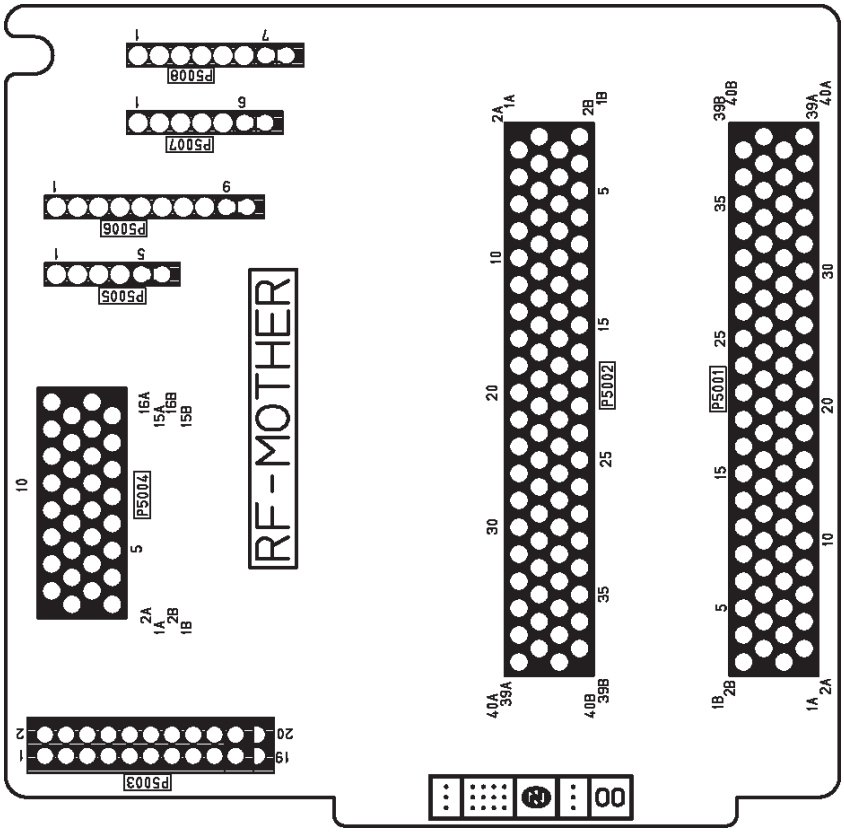

(FOIL SIDE)

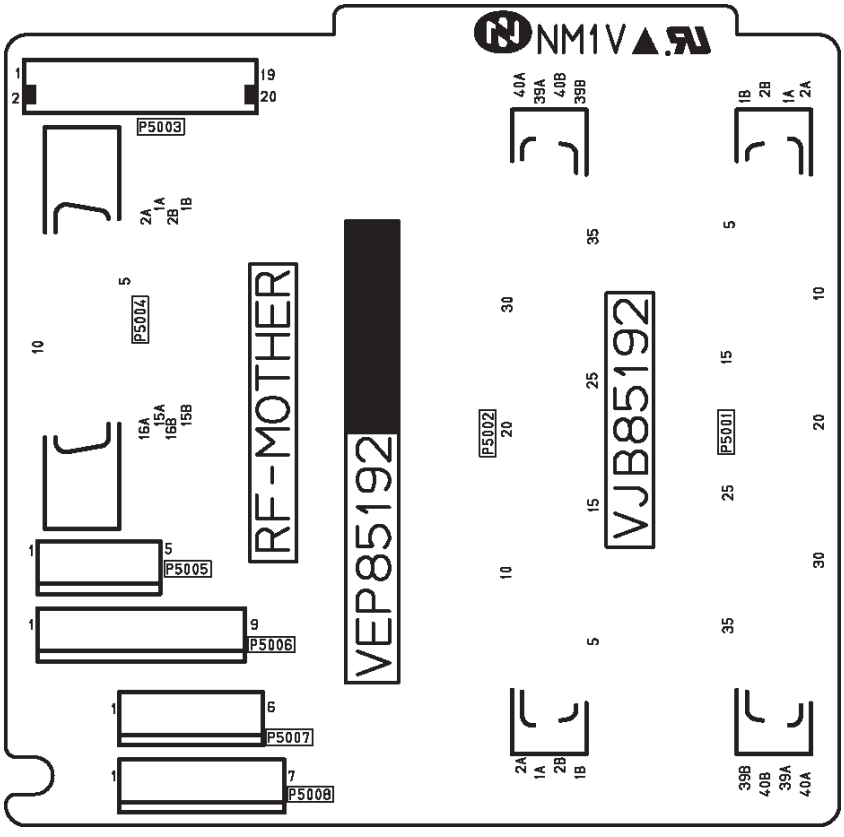

(COMPONENT SIDE)

VTR MOTHER P.C. BOARD (VEP80B76A)

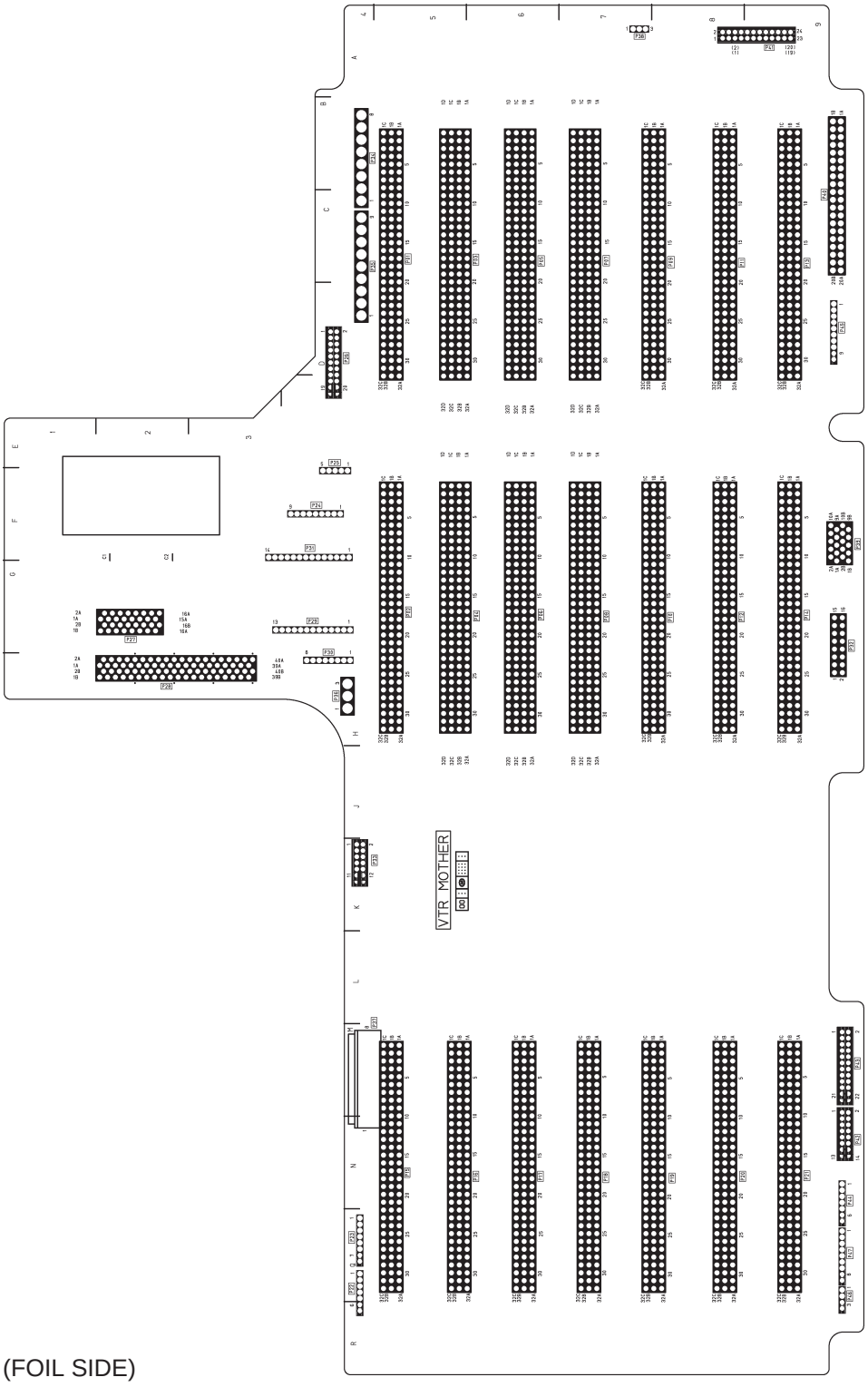

(FOIL SIDE)

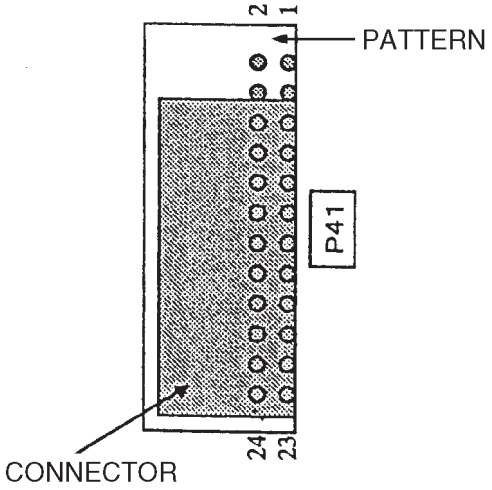

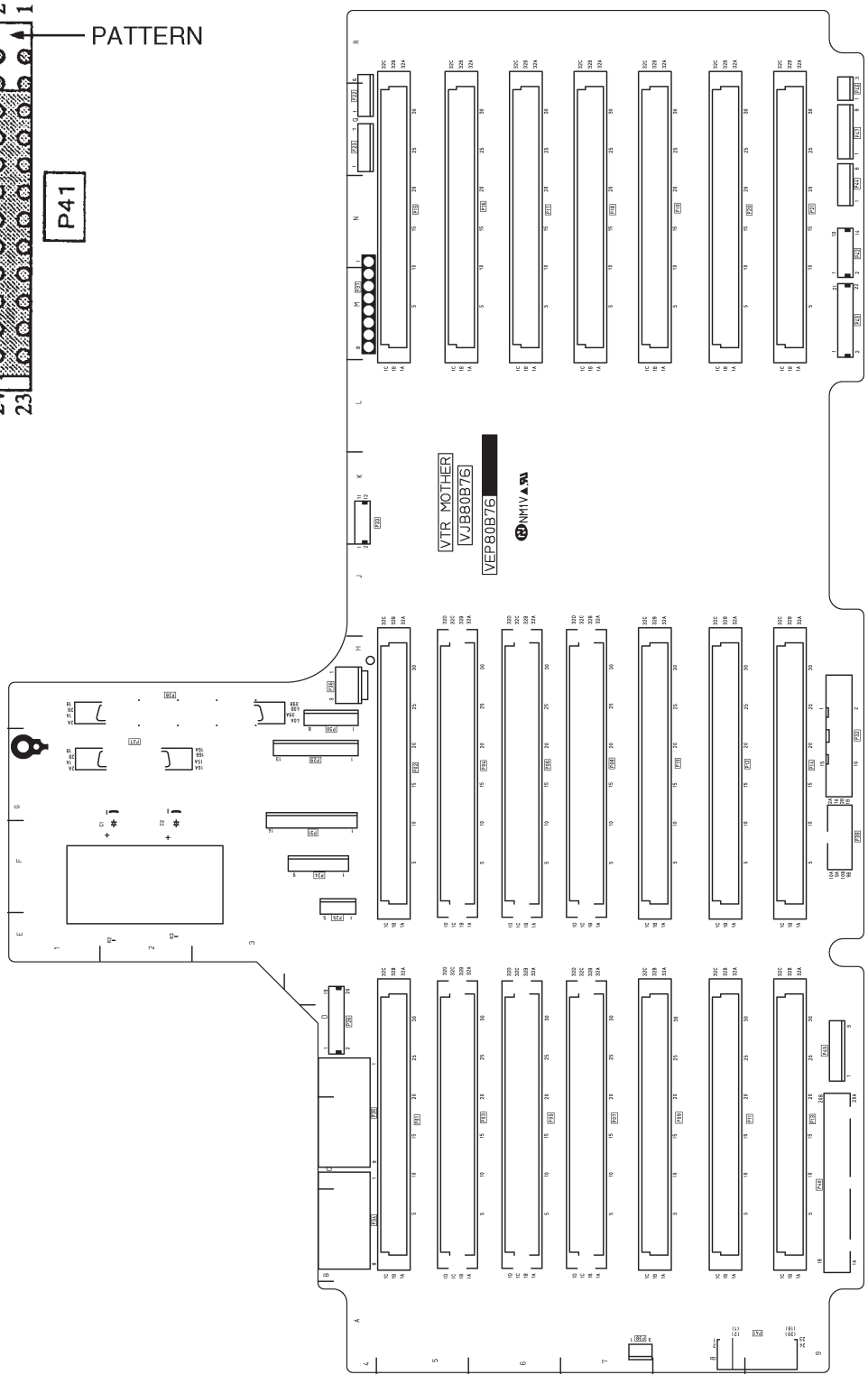

(COMPONENT SIDE)

VIDEO REAR P.C. BOARD (VEP83533A)

REF	LOC	REF	LOC	REF	LOC	REF	LOC
IC1	A1	Q6	B2	Q102	D3	Q114	D2
IC2	A1	Q7	A1	Q103	C2	Q115	D2
IC100	A2	Q8	B1	Q104	D2	Q116	D1
IC101	A2	Q9	B1	Q105	D2	Q117	D1
IC102	A2	Q10	B1	Q106	C2		
IC103	A3	Q11	B1	Q107	D1		
P1	C1	Q12	B2	Q108	D1		
Q1	A3	Q13	C1	Q109	D3		
Q2	B3	Q14	C1	Q110	D3		
Q3	B3	Q15	C2	Q111	D3		
Q4	A2	Q100	C3	Q112	D2		
Q5	B2	Q101	D3	Q113	D2		

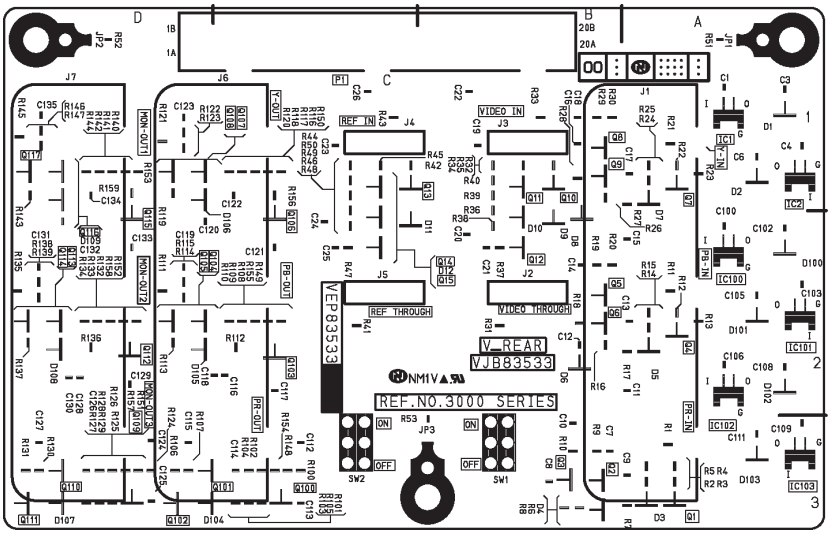

(FOIL SIDE)

REF	LOC
SW1	B3
SW2	C3

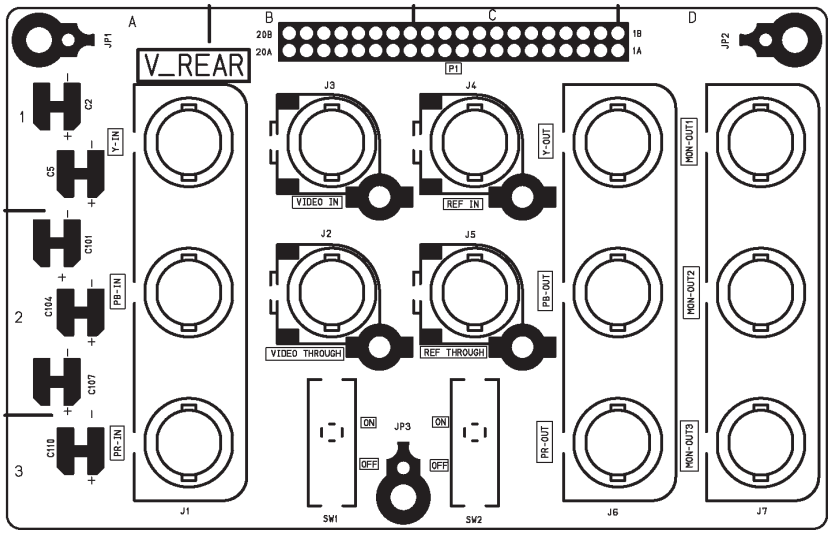

(COMPONENT SIDE)

AUDIO REAR P.C. BOARD (VEP84362B)

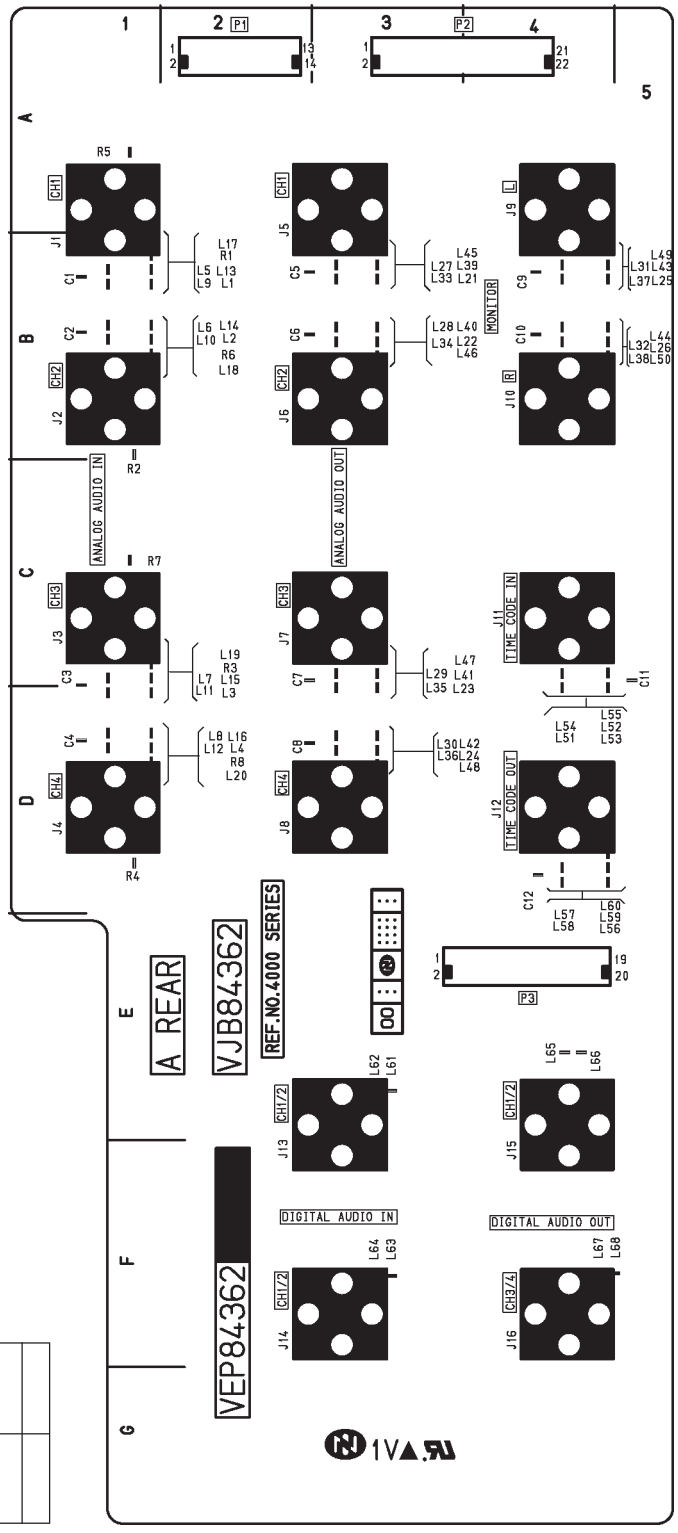

REF	LOC
P1	A2
P2	A3
P3	E4

(FOIL SIDE)

AUDIO REAR P.C. BOARD (VEP84362B)

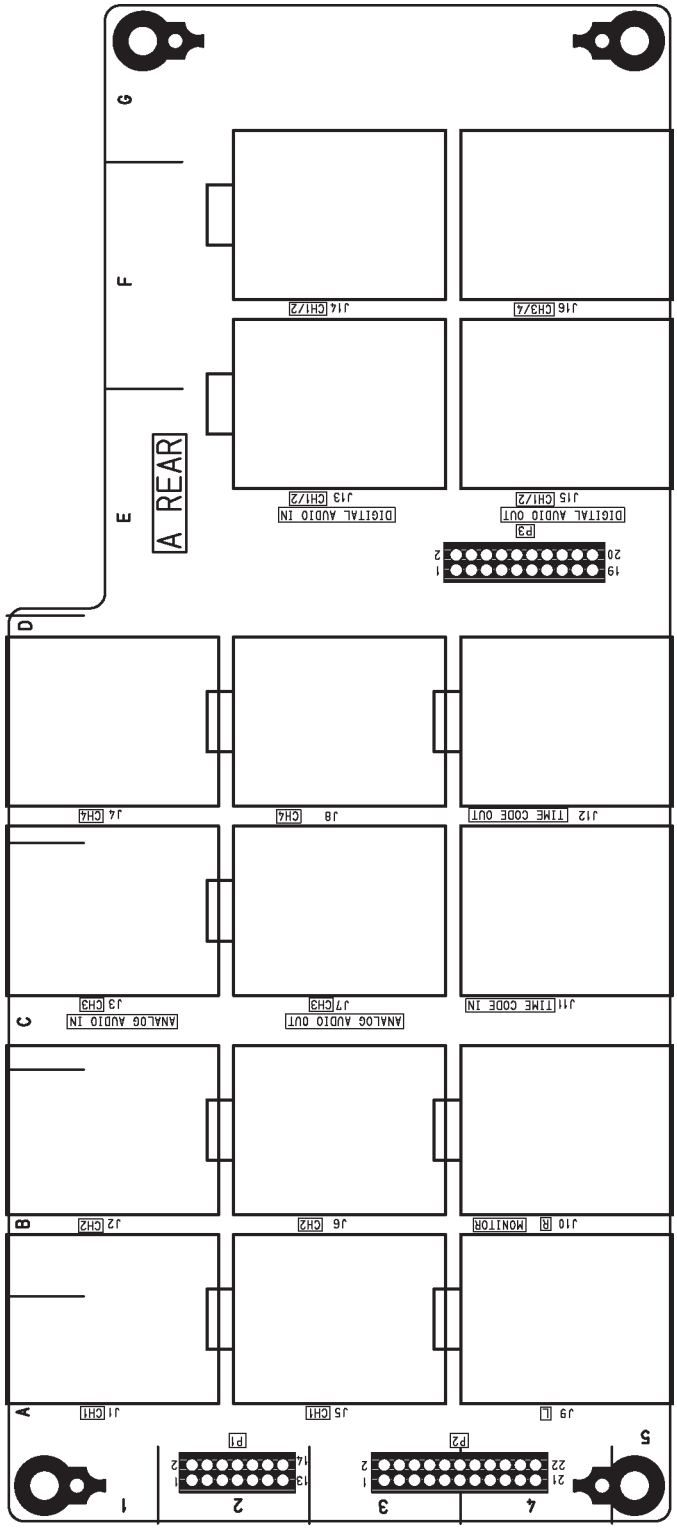

(COMPONENT SIDE)

HP/MIC JACK P.C. BOARD (VEP84363A)

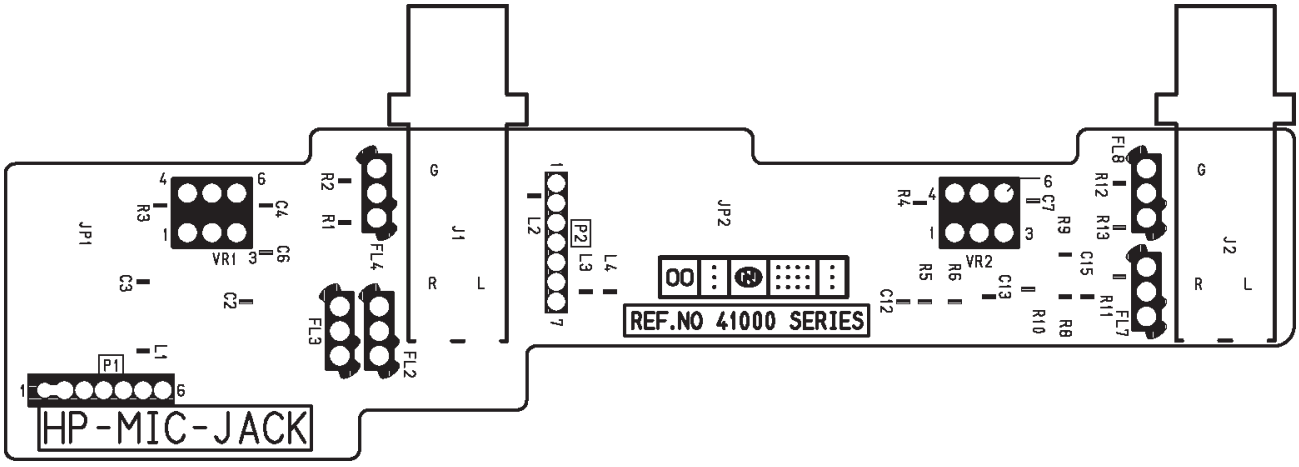

(FOIL SIDE)

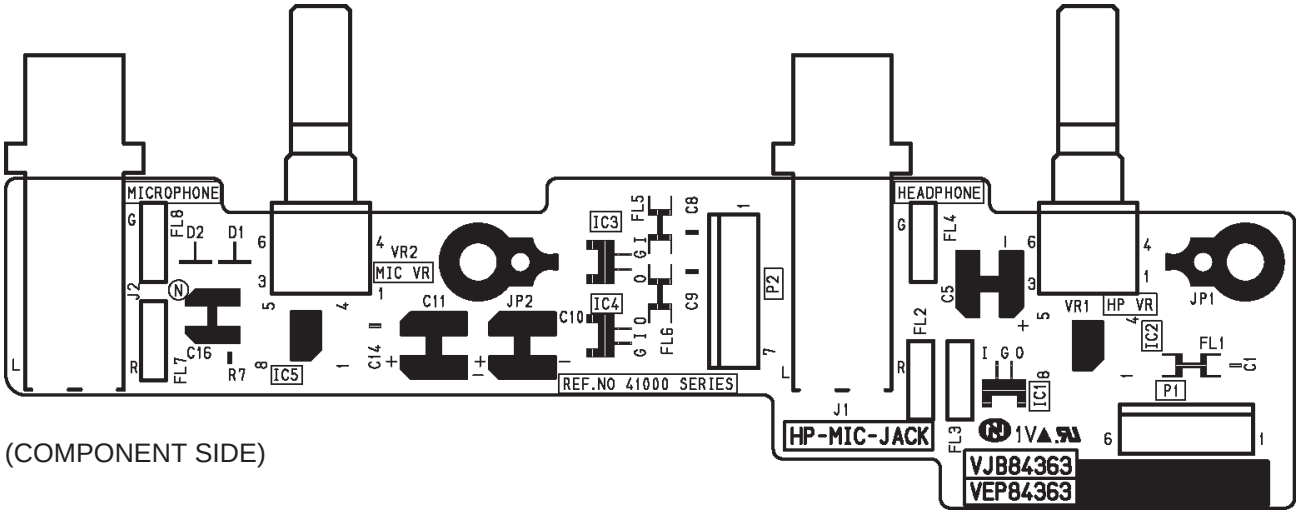

(COMPONENT SIDE)

POWER 1 P.C. BOARD (VEP81183A)

REF	LOC	REF	LOC
Q1	B3	IC3	C3
Q2	B4	VR2	B5
Q4	C4	P1	A3
Q5	C5	P2	A2
IC1	B4	P3	A2
IC2	B5	P4	C4

JAPAN ONLY

⚠ 警　告

感電注意

AC100V の加わっている活電部（充電部、活電部）に直接触れないでください。

＋ 感電ややけどの可能性があります。

① ⚠ 警告　⚠印の部品は安全上重要な部品です。
交換するときは、安全および性能維持のため必ず指定の部品をご使用ください。

② ▭ 内は充電部です。 AC 100V が加わっておりますので点検、修理のときは感電しないよう充分ご注意ください。

③ 部品交換時には、電源プラグをぬいてから行ってください。

④ 一次側（充電部）の電圧・波形は、一次側アースを基準に測定してください。

⑤ 部品品番は、部品価格表で確認の上交換ください。

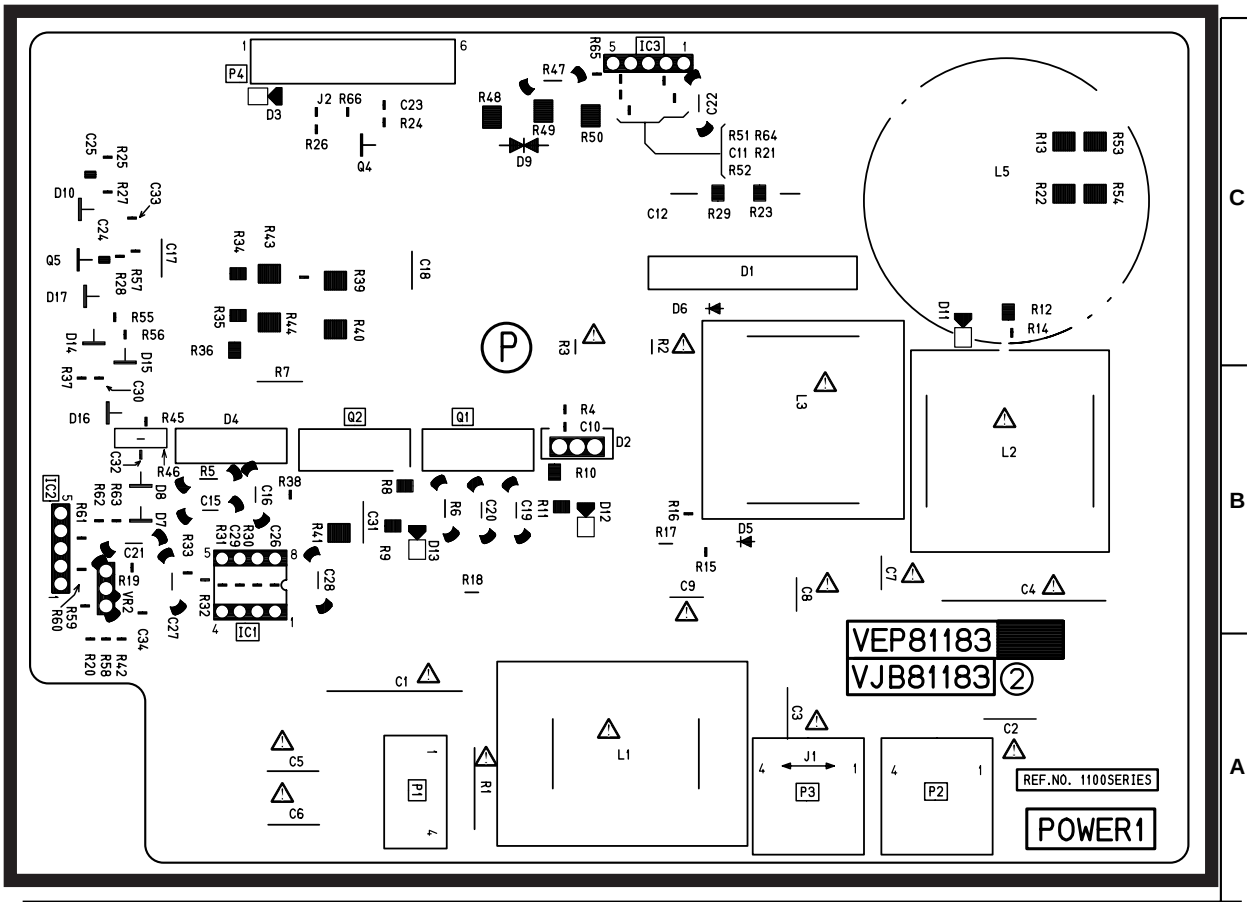

(FOIL SIDE)

POWER 2 P.C. BOARD (VEP81184A)

REF	LOC	REF	LOC	REF	LOC	REF	LOC	REF	LOC	REF	LOC
IC1001	C5	P1011	A4	Q1002	C5	Q1007	C5	Q1015	C5	Q1022	A1
IC1002	C5	P1012	A4	Q1003	C5	Q1011	B5	Q1017	B4	Q1023	A1
IC1011	B5	P1013	A3	Q1004	C5	Q1012	C2	Q1018	B2	Q1024	C2
IC1012	C2	P1014	A1	Q1005	C5	Q1013	C2	Q1019	C2	VR1001	D5
IC1013	A1	P1015	D3	Q1006	C5	Q1014	C5	Q1020	C2	VR1002	D5

CAUTION

THE ▬ MARK INDICATES THE PRIMARY CIRCUIT TO DISTINGUISH THE PRIMARY FROM THE SECONDARY CIRCUIT.
PAY ATTENTION NOT TO RECEIVE AN ELECTRIC SHOCK DURING REPAIR AND SERVICE OF THE PRODUCTS.

IMPORTANT SAFETY NOTICE:
COMPONENTS IDENTIFIED WITH THE MARK ⚠ HAVE THE SPECIAL CHARACTERISTICS FOR SAFETY.
WHEN REPLACING ANY OF THESE COMPONENTS, USE ONLY THE SAME TYPE.

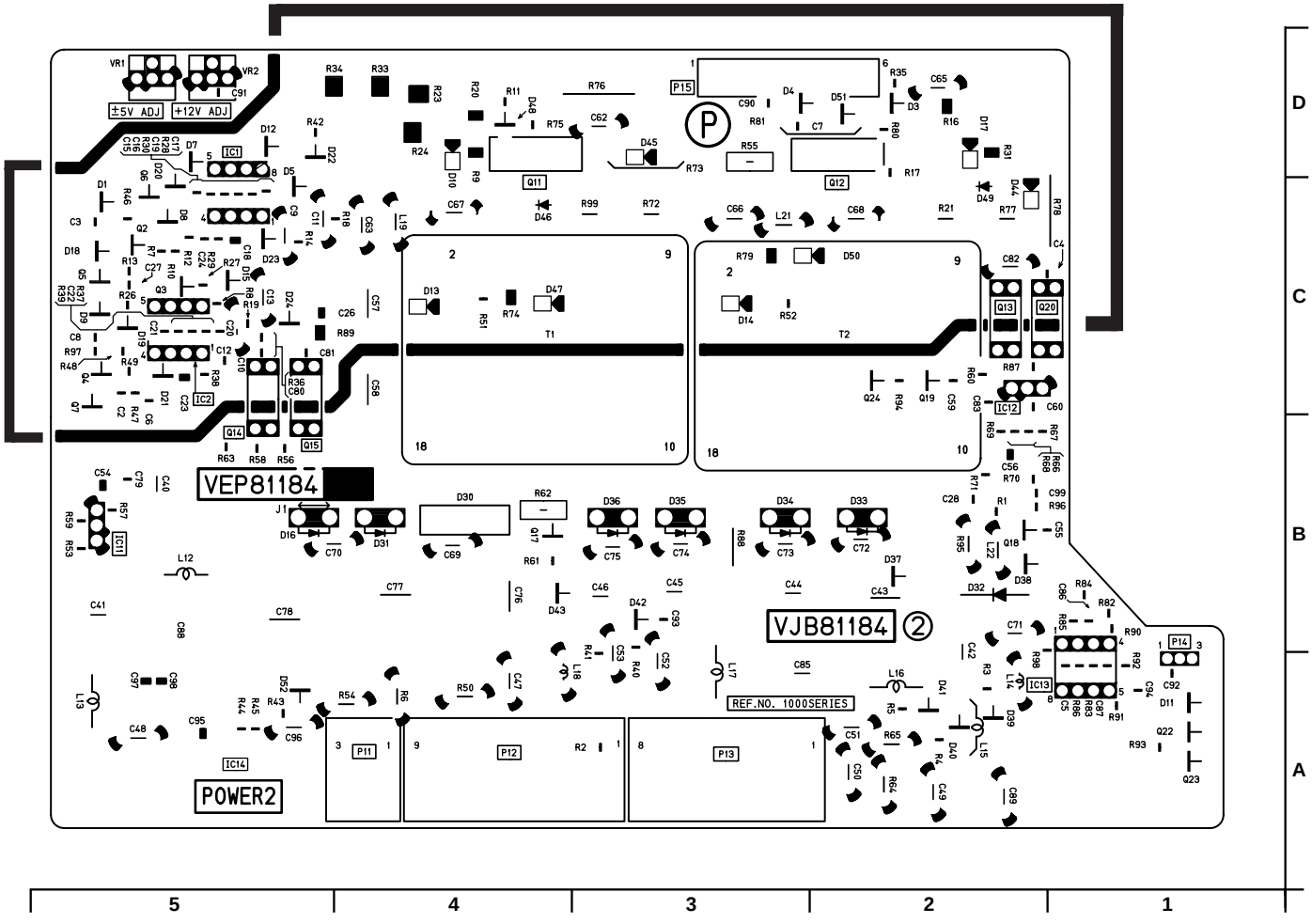

(FOIL SIDE)

AC HEAD IF P.C. BOARD (VEP80B77A)

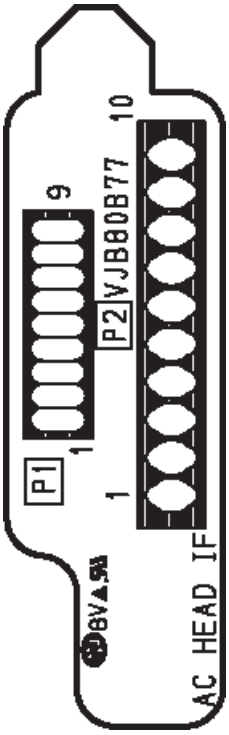

(FOIL SIDE)

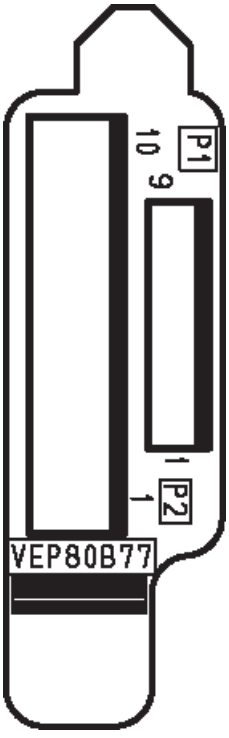

(COMPONENT SIDE)

MECHA IF P.C. BOARD (VEP82231A)

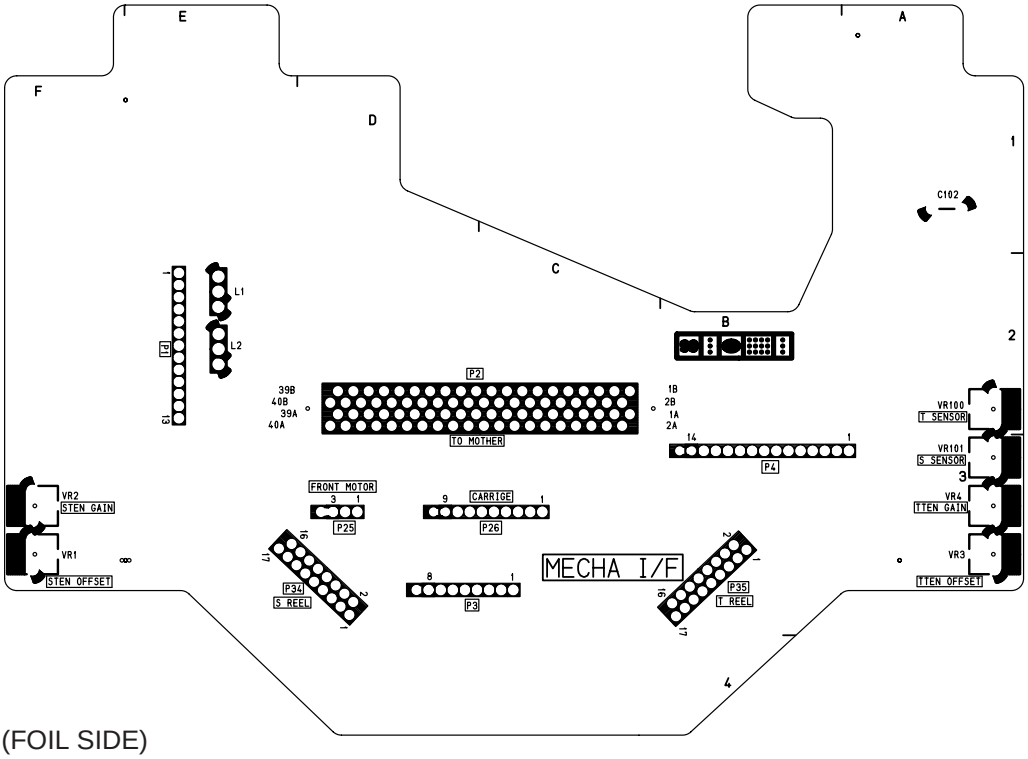

(FOIL SIDE)

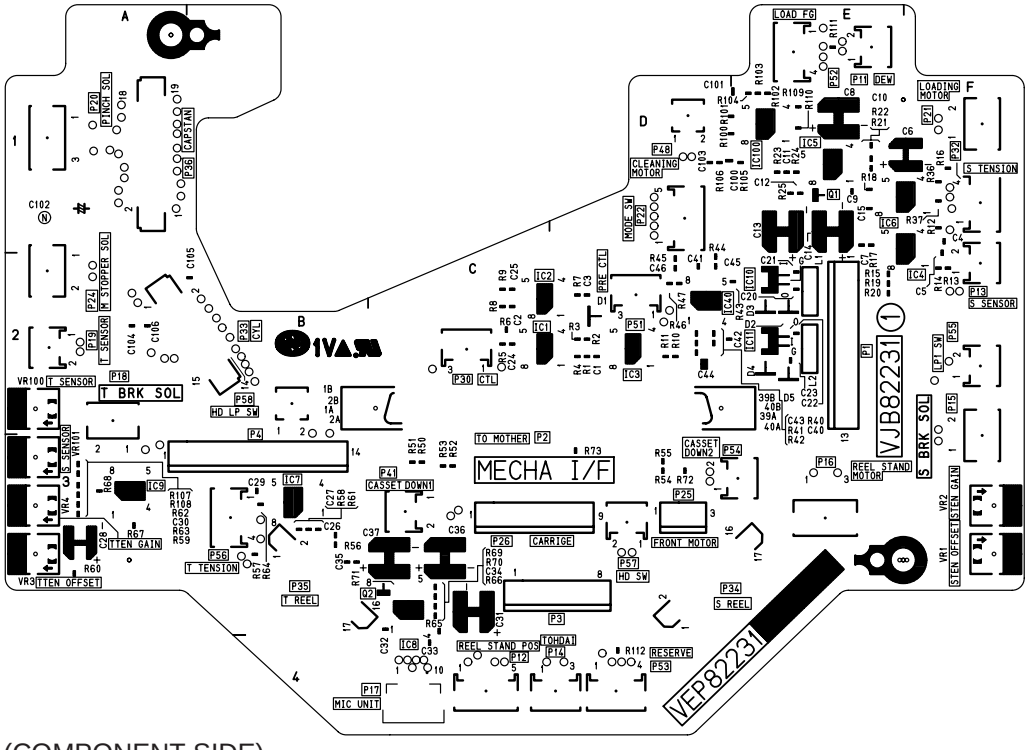

(COMPONENT SIDE)

EJECT P.C. BOARD (VEP80A50A)

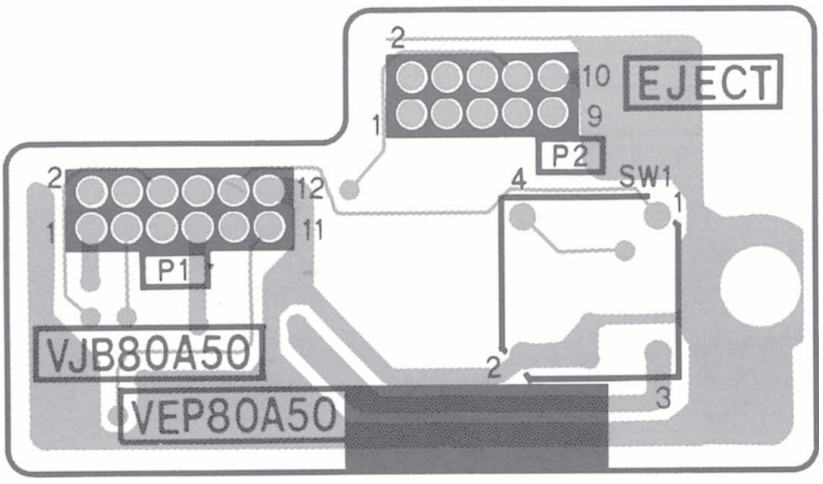

FRONT LED P.C. BOARD (VEP80A51A)

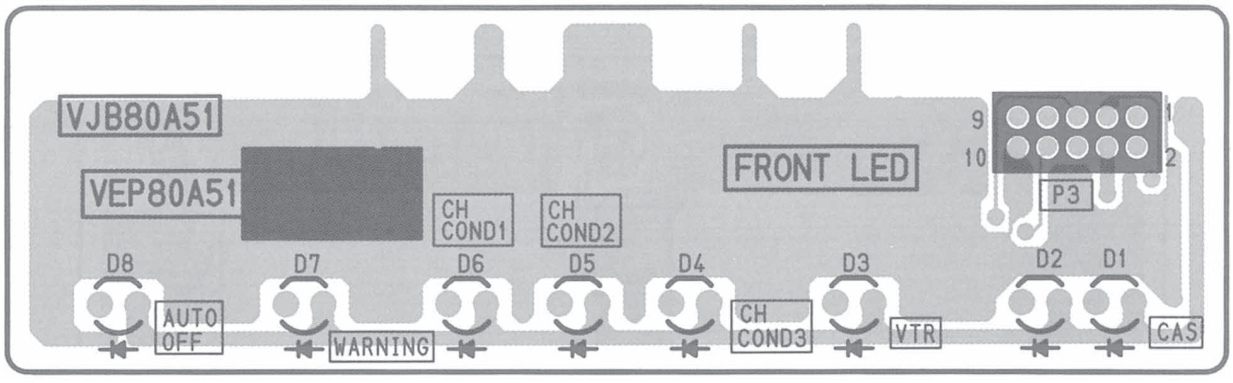

MAIN POWER LED P.C. BOARD (VEP80A72A)

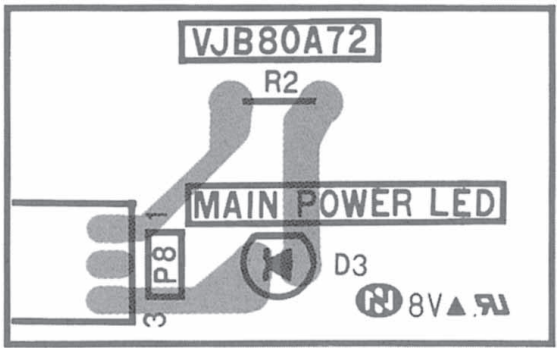

RESET SW P.C. BOARD (VEP80A62A)

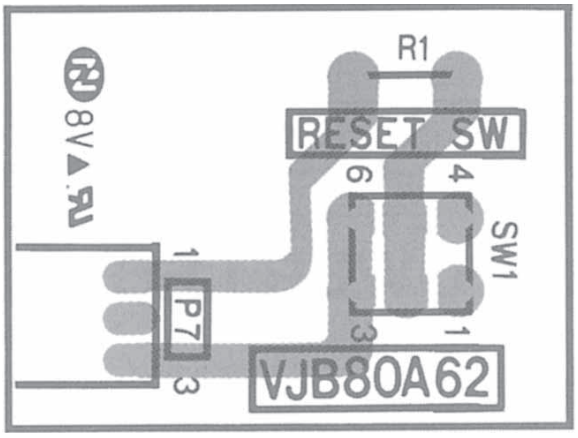

PC POWER SW P.C. BOARD (VEP80A70A)

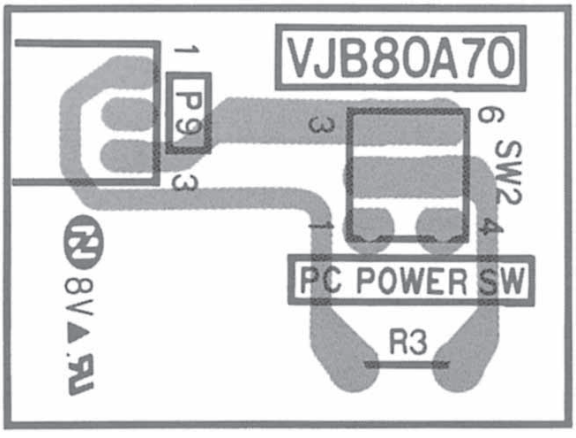

FAN I/F P.C. BOARD (VEP80A63A)

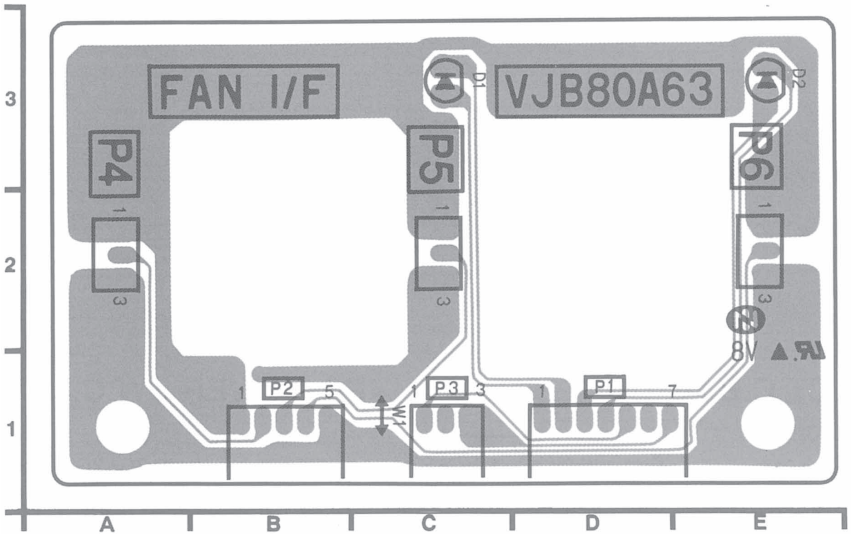

SCSI MOTHER P.C. BOARD (VEP80B93A)

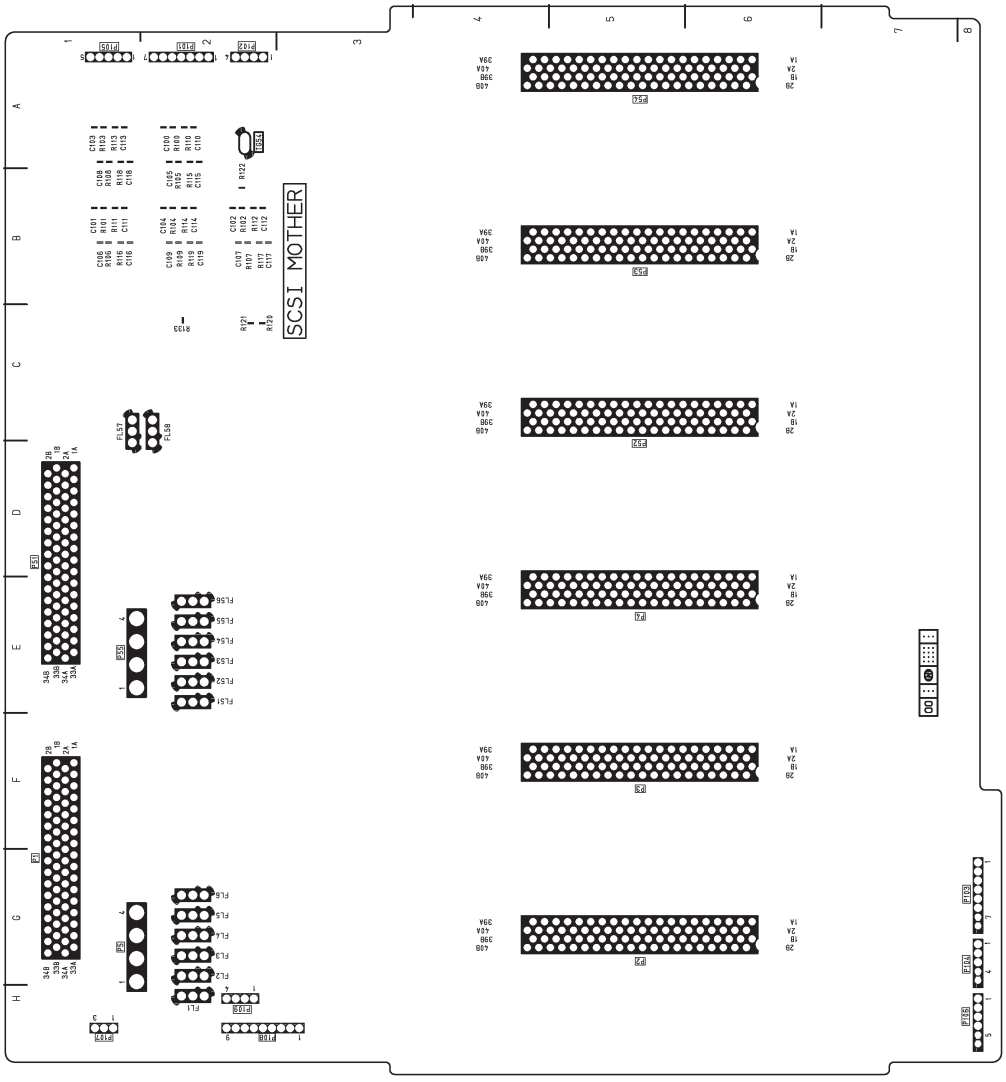

(FOIL SIDE)

SCSI MOTHER P.C. BOARD (VEP80B93A)

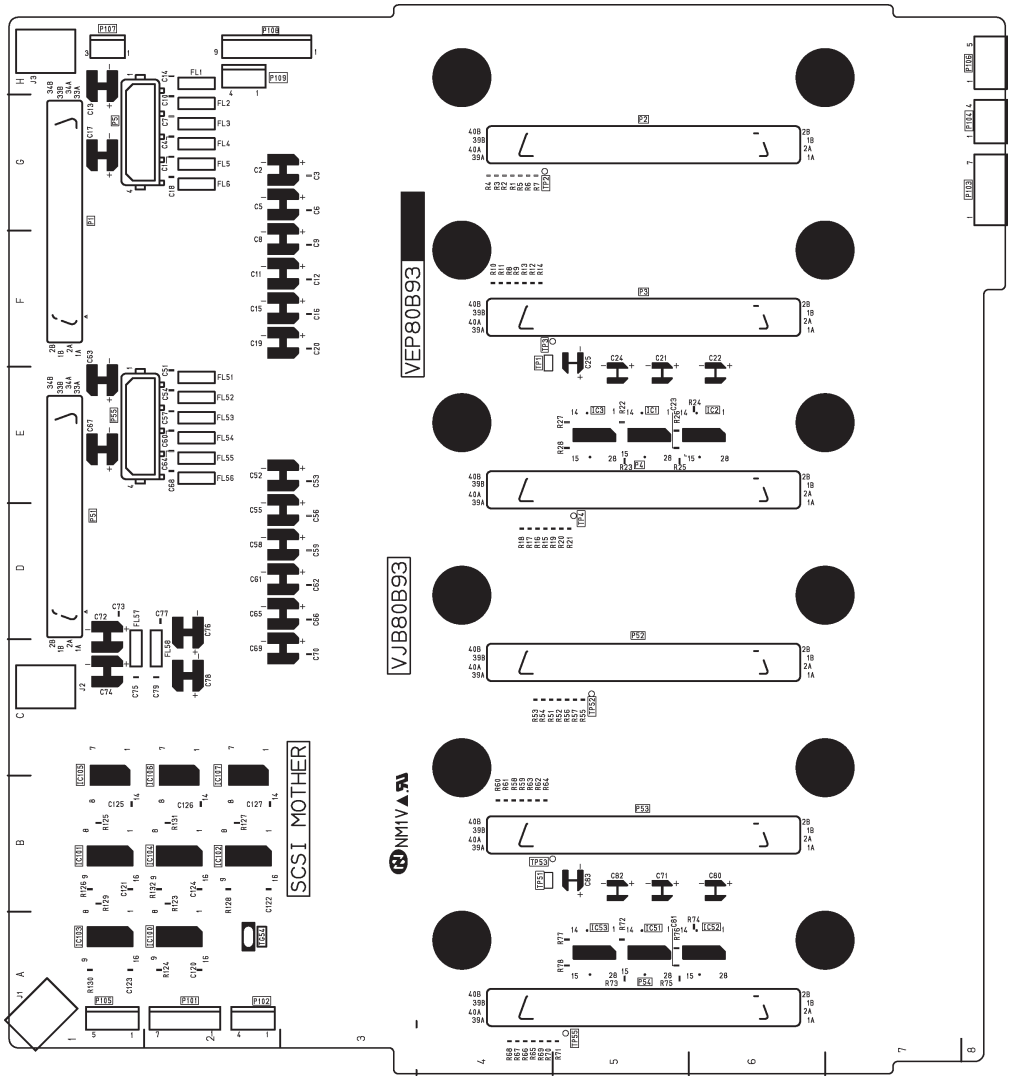

(COMPONENT SIDE)

REF	LOC	REF	LOC	REF	LOC
IC1	E5	IC106	C2	P102	A2
IC2	E6	P1	G1	P103	G8
IC3	E5	P2	G5	P104	G8
IC51	A5	P3	F5	P105	A1
IC52	A6	P4	E5	P106	H8
IC53	A5	P5	G1	P107	H1
IC100	A2	P51	D1	P108	H3
IC101	B1	P52	C5	P109	H2
IC102	B2	P53	B5	TG54	A2
IC103	A1	P54	A5	TP1	F4
IC104	B2	P55	E1	TP51	B4
IC105	C1	P101	A2		

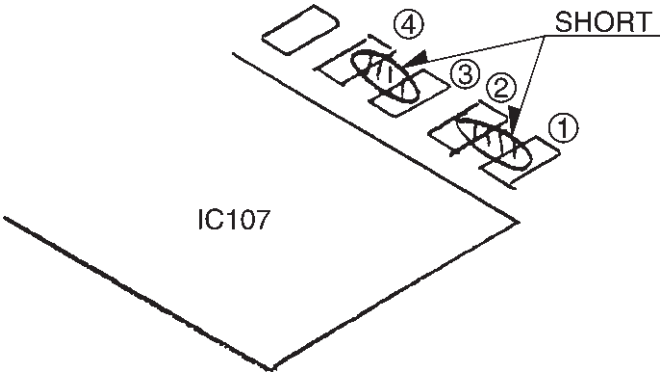

PC FAN IF P.C. BOARD (VEP80C17A)

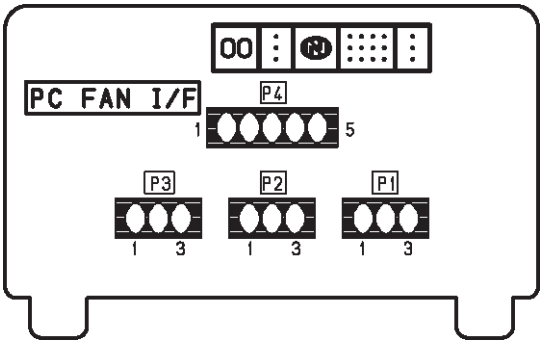

(FOIL SIDE)

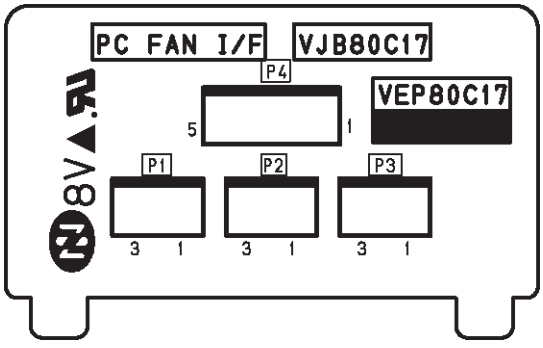

(COMPONENT SIDE)

SECTION 8

EXPLODED VIEWS
&
REPLACEMENT PARTS LISTS

Note:

1. *Be sure to make your orders of replacement parts according to this list.
2. Unless otherwise specified, all resistors are in OHMS, K=1,000 OHMS, all capacitors are in MICROFARADS (µF), P=µµF.
3. The P.C. Board untils marked with "■" shown below the main assembled parts.
4. The parts marked with Ⓔ on the exploded view show the electric parts.
5. IMPORTANT SAFETY NOTICE
   Components identified with the mark ⚠ have the special characteristics for safety. When replacing any of these components, use only the same type.
6. The marking (RTL) indicates the retention time is limited for this item.
   After the diacontinuation of this assembly in production, it will no longer be available.

CONTENTS

Mechanical Replacement Parts List & Exploded Views PRT-1
Mechanical Component Assembly(1).....PRT-1
Mechanical Component Assembly(2).....PRT-3
Mechanical Component Assembly(3).....PRT-5
Casing Parts Assembly PRT-7
Front Panel Assembly PRT-9
Frame Assembly PRT-11
Cassette Compartment Assemly.....PRT-13
Mechanical Chassis Assembly(1) PRT-15
Mechanical Chassis Assembly(2) PRT-17
Packing Parts Assembly PRT-19
Cable List PRT-21
Electrical Replacement Parts List.....PRT-22

SERVICING FIXURES & TOOLS

Ref.No.	Part No.	Part Name & Description	Pcs	Remarks
1	VFK1145A	BACK TENSION METER (T2-M30-P)	1	
2	VFK1149A	POST DRIVER	1	
3	VFK71A	DIAL TORQUE GAUGE (1.5cN·m)	1	150g
4	VFK1191A	DIAL TORQUE GAUGE (0.45cN·m)	1	45g
5	VFK1152	DIAL TORQUE GAUGE ADAPTER	1	
6	VFK0357	ECCENTRIC SCREWDRIVER (1.5mm)	1	
7	VFK1154	POST HEIGHT FIXTUR	1	
8	VFK1586	NEUTRAL POSIOTION PLATE	1	FOR L CASSETTE
9	VFK1587	NEUTRAL POSIOTION PLATE (w/hole)	1	
10	VFK1588	NEUTRAL POSIOTION PLATE (w/hole)	1	
11	VFK1150	NUT DRIVER (5.5mm)	1	
12	VFK1188A	DIAL TENSION GAUGE (300mN)	1	30g
13	VFK0948A	CHECK LIGHT	1	
14	VFK0749	FROIRAL GREASE	1	FOR PLASTICS
15	MOR265	MORLYTONE GREASE	1	FOR METAL
16	VFK1146	PHILIPS DRIVER (FINE) (00-75)	1	
17	VFK1147	PHILIPS DRIVER (FINE) (00-100)	1	
18	VFK1148	HEX. DRIVER (1.5mm)	1	
19	VFK1178	HEX. DRIVER (0.89mm)	1	
20	VFK1179	HEX. DRIVER (0.71mm)	1	

Ref.No.	Part No.	Part Name & Description	Pcs	Remarks
21	VFK1589	A/C HEAD FFIXTURE	1	
22	VFK1209A	TORQUE DRIVER (4cN·m-30cN·m)	1	0.4kgf·cm-3kgf·cm
23	VFK0912	POST AXIS DRIVER (1.5mm)	1	
24	VFM3580KM	DVCPRO ALIGNMENT TAPE (NO.1) FOR NTSC	1	OR VFM3580KL
25	VFM3581KM	DVCPRO ALIGNMENT TAPE (NO.2) FOR NTSC	1	OR VFM3581KL
26	VFM3582KM	DVCPRO ALIGNMENT TAPE (NO.3) FOR NTSC	1	OR VFM3582KL
27	VFM3380KM	DVCPRO 50 ALIGNMENT TAPE FOR NTSC	1	
28	AJ-CL12MP	CLEANING TAPE	1	SALES ROUTE
29	VFK1369	TAPE BEG./END DETECTION CASSETTE	1	
30	VFK1481B	LISTA SOFTWARE	1	
31	VFK1186	LISTA CABLE	1	
32	VFK1192	H EXTENDER BOARD	1	FOR F1,F5,F6,F7
33	VFK1383	H EXTENDER BOARD (2)	1	FOR F2,F4
34	VFK1193	H EXTENDER BOARD	1	FOR H1,H3,H4,H5,H6,H7
35	VFK1248E	FLASH MEMORY VERSION UP SOFTWARE	1	
36	VFK1503	SERVO VERSION UP SOFTWARE	1	
37	VFK1304A	FLASH MEMORY VERSION UP TOOL	1	
38	VZZ0095	CLEANING CLOSE	1	
39	VYP7583	SERVICE FRONT PANEL UNIT	1	
40	VFK1590	CPLD WRITER	1	

Components identified with the mark ⚠ have the special characteristics for safety.
When replacing any of these components, use only the same type.

MECHANICAL COMPONENT ASSEMBLY (1)

Ref.No.	Part No.	Part Name & Description	Pcs	Remarks
1	VSC4388	POWER SUPPLY CASE B	1	
⚠ 2	VMZ2503	SHIELD SHEET B	1	
3	VSC5003	HEAT SINK (A)	1	
⚠ 4	VMZ2502	SHIELD SHEET A	1	
⚠ 5	VSC4387	POWER SUPPLY CASE A	1	
6	VRF0190	FAN MOTOR	3	L6FALEFH0007
7	VMP5545	AC SOCKET HOLDER ANGLE	1	
⚠ 8	VJP0083	AC INLET	1	
⚠ 9	VMZ1252	AC INLET COVER	1	
10	VML2903	AC CORD HOOK	1	
⚠ 11	VJF1005	FUSE HOLDER	2	K3GA1BJ00013
⚠ 12	VMZ2139	FUSE HOLDER COVER	2	
⚠ 13	XBA1C50NB5	FUSE	1	K5D502AQ0001
14	VMP5543	SW HOLDER ANGLE	1	
15	VSW0153	SW WIRE	2	
⚠ 16	VSW0152	POWER SW	2	K0AZKF000001
17	VJF0546	EDGE SADDLE	1	
19	VJH1183	JACK PLATE	1	
20	VMP5596	AUDIO P.COBARD EARTH	1	
21	VMZ3118	P.C.BOARD BARRIER	1	
22	VJR3	WIRE CLAMPER	2	
24	VGM1747	FAN COVER	1	
25	VGQ6065	P.C.B. GUIDE RAIL	1	
26	VMP6693	P.C.BOARD GUIDE FRAME	1	
27	VSC4743	FAN SHIELD (UPPER)	1	
28	VMG1101	RUBBER GROMMET	1	
29	VGU7636	POWER BUTTON	1	
30	VMS6175	P.C.B. POST	2	K9ZZ00000694
31	VMP5542	SW HOLDER ANGLE (A)	1	
32	VSW0155	SW	2	K9ZZ00000418
33	VJF1324	M CLAMP	2	
34	VGU5334	LEVER VR KNOB	2	
35	VJF0285	WIRE LOCKING SADDLE	1	
36	VLP0123	FERRITE CORE	1	J0KG00000001
37	VSQ0819	DC LINE CORE	2	J0KG00000013
38	VJF1327	CLAMPER	1	
39	VJF0866	CLIP	1	
40	VEC0977	CABLE	1	
43	VMT0944	GASKET	4	J0KG00000013
44	VMT0884	GASKET	1	
45	VJS3462	BNC CONNECTOR	4	K1SMBDBA0002
46	VEE0M81	CABLE	1	SCSI
47	VEE0M82	CABLE	1	ELDE
48	VEE0M83	CABLE	1	FDD
49	VMP6704	CONNECTOR ANGLE	1	
50	VMP6750	CONNECTOR BLIND ANGLE	1	
51	VEK9283	VTR POWER ASS'Y	1	
52	VMP6679	P.C.B. HOLD ANGLE	1	
100	XTV3+6F	SCREW	23	
101	XYN3+K6	SCREW	8	
102	XTV3+6FFZ	SCREW	2	
103	XTV3+12JFZ	SCREW	10	
104	XSN26+6FZ	SCREW	22	
105	XYE3+EF8	SCREW	6	
106	XSB3+6FZ	SCREW	2	
107	XTW3+6L	SCREW	4	
108	XYE3+EF8FZ	SCREW	3	
109	XYNV4+K35FCS	SCREW	5	
110	XYN3+F6	SCREW	5	
111	XYE4+EF8	SCREW	1	
112	XSB4+8FC	SCREW	6	
113	XTV3+8G	SCREW	16	
E1	VEP82230C	F1 SERVO P.C.BOARD	1	
E2	VEP86294C	F2 SYSCON P.C.BOARD	1	
E3	VEP83534A	F4 REC PB P.C.BOARD	1	
E4	VEP83494A	F5 V OUT P.C.BOARD	1	

Ref.No.	Part No.	Part Name & Description	Pcs	Remarks
E5	VEP83385B	422/844 DA P.C.BOARD	1	
E6	VEP84343A	F6 A-PROC P.C.BOARD	1	
E7	VEP83409C	F7 V IN P.C.BOARD	1	
E8	VEP85184C	H1 EQ1 P.C.BOARD	1	
E9	VEP85184D	H2 EQ2 P.C.BOARD	1	
E10	VEP85185B	H3 EQ MAIN P.C.BOARD	1	
E11	VEP84366A	H5 A MONI MIC P.C.BOARD	1	
E12	VEP84365A	H6 A DA P.C.BOARD	1	
E13	VEP84364A	H7 A AD P.C.BOARD	1	
E18	VEP81183C	POWER 1 P.C.BOARD	1	
E19	VEP81184F	POWER 2 P.C.BOARD	1	
E20	VEP80A58A	POWER INT P.C.BOARD	1	
E21	VEP84363A	HP/MIC JACK P.C.BOARD	1	
E25	VEP83533A	VIDEO REAR P.C.BOARD	1	
E26	VEP84362B	AUDIO REAR P.C.BOARD	1	
E29	VEP80A72A	MAIN POWER LED P.C.BOARD	1	
E32	VEP80B93A	SCSI MOTHER P.C.BOARD	1	

Components identified with the mark △ have the special characteristics for safety.
When replacing any of these components, use only the same type.

MECHANICAL COMPONENT ASSEMBLY (1)

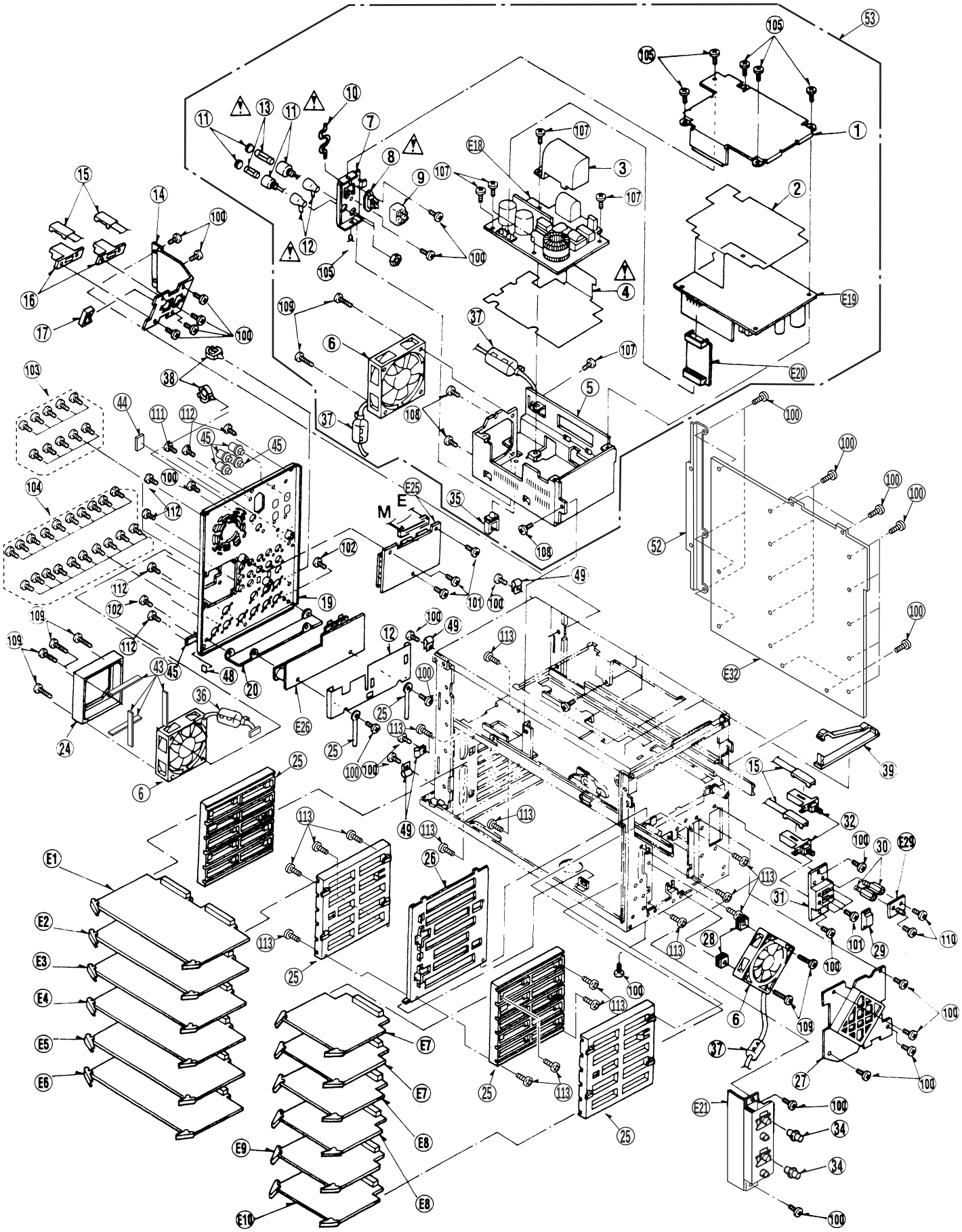

MECHANICAL COMPONENT ASSEMBLY (2)

Ref.No.	Part No.	Part Name & Description	Pcs	Remarks
1	VMP5504	IDE CASE	1	
2	VMT0852	HDD CUSHION	14	
3	VMS6029	GUIDE PIN	2	
4	VSI3615	SYSTEM HDD	1	
5	VYQ1836	HDD GUIDE RAIL	2	
6	VMP5505	IDE HOLDER ANGLE	1	
8	VMP6676	HDD FRAME (L)	1	
9	VMP6677	HDD FRAME (R)	1	
10	VMP6678	HDD CENTER FRAME	2	
11	VMC1546	HDD SUPPORT SPRING	12	
13	N3CBBPB00007	SCSI HDD	5	
14	VMP6680	HDD GUIDE RAIL (L)	5	
15	VMP6681	HDD GUIDE RAIL (R)	5	
16	VEE0B55	CABLE	2	K1KA68B00017
17	VEE0B54	CABLE	2	
19	VSE0220	SHOCK WATCH	1	
100	XTV3+6F	SCREW	40	
101	XSN6-32+48	SCREW	12	
102	XYN4+F8S	SCREW	2	
103	XSB4+8FC	SCREW	4	

Ref.No.	Part No.	Part Name & Description	Pcs	Remarks

MECHANICAL COMPONENT ASSEMBLY (2)

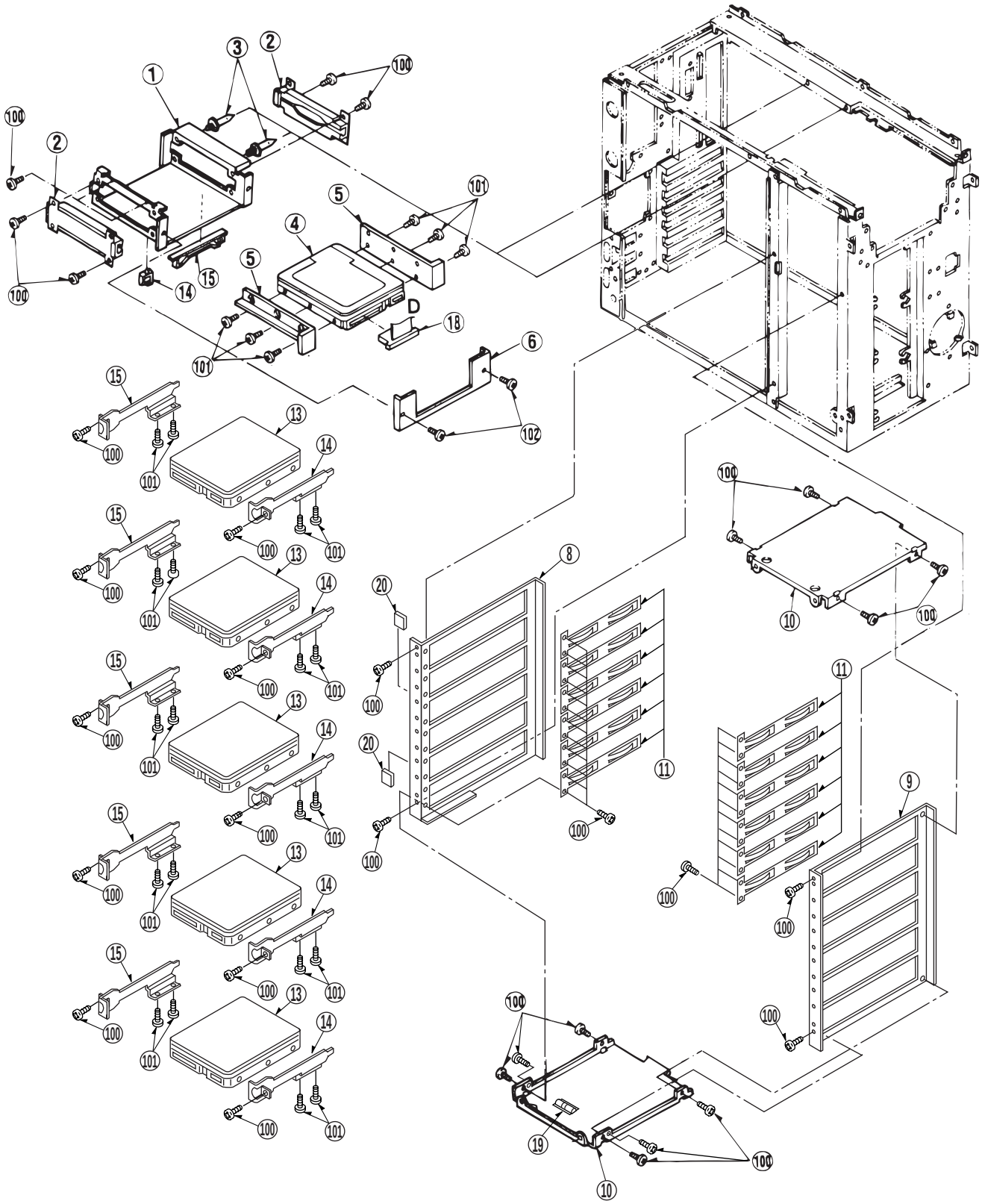

Components identified with the mark ⚠ have the special characteristics for safety.
When replacing any of these components, use only the same type.

MECHANICAL COMPONENT ASSEMBLY (3)

Ref.No.	Part No.	Part Name & Description	Pcs	Remarks
⚠ 1	VEK8562	POWER ASS'Y (DISK)	1	
2	VMP5569	PC POWER HOLDER (R)	1	
3	VMP5568	PC POWER HOLDER (L)	1	
4	VGF0409	FAN GUARD	3	
5	VGM1747	FAN COVER	1	
6	VRF0190	FAN MOTOR	6	L6FALEFH0007
7	VMP5503	CPU BORAD ANGLE	1	
9	VJF0818	WIRE CLAMPER	5	
10	VMS6081	P.C.B. POST	6	K9ZZ00000704
15	VMP5519	CD/FDD CASE	1	
16	VJF1324	M CLAMP	2	
17	VEK9112	CD-ROM DRIVE	1	
18	VMP5511	CD GUIDE ANGLE (R)	1	
19	VMP5514	CD GUIDE ANGLE (L)	1	
20	VEK8253	FDD	1	
21	VMP5595	GUIDE ANGLE (R)	1	
22	VMP5513	GUIDE ANGLE (L)	1	
23	VMT0498	GASKET (S)	4	
24	VGU6899	RESET BUTTON	2	
25	EAS6P90C	SPEAKER	1	
26	VMT0859	SPEAKER HOLD CUSHION	1	
27	VMP5532	SPEAKER HOLDER	1	
28	VMG1101	RUBBER GROMMET	6	
29	VMS3187	GUIDE PIN (B)	4	
30	VHD0325	SCREW	4	
32	VMX1195	HEX SCREW	4	K9ZZ00000692
33	VMS6175	P.C.B. POST	2	K9ZZ00000694
34	VMS6419	HEX SCREW	1	K1YE50000011
39	VMT0944	GASKET	1	
40	VMT0500	GASKET	1	
41	VMT0946	GASKET	1	
42	VGM1570	BLIND ANGLE	1	
43	VSC4832	REAR FAN SHIELD	1	
44	VMP5814	TRV EARTH ANGLE	1	
45	VSC5058	SHIELD COVER	1	
46	VMP6759	EARTH ANGLE	1	
47	VEE0M81	SCSI CABLE	2	
48	VEE0M82	EIDE CABLE	1	
49	VEE0M83	FDD CABLE	1	
50	VMP6763	FAN HOLD ANGLE	1	
51	VMP6820	MOUSE EARTH SPRING	1	
52	VMP6751	MOUSE HOLD ANGLE	1	
54	VEE0M82	CABLE	1	
55	VEE0M83	CABLE	1	
56	C2GAC0000078	CPU	1	
57	VEK9275	CPU FAN	1	
58	VEK8715	DIMM	1	
100	XYN3+F6	SCREW	33	
101	XYNV4+K35FCS	SCREW	14	
102	XTV3+6F	SCREW	26	
103	XWGV4D11G	WASHER	4	
104	XNG4ES	NUT	8	
105	XSB4+8FC	SCREW	3	
E27	VEP80A63A	FAN I/F P.C.BOARD	1	
E28	VEP80A62A	RESET SW P.C.BOARD	1	
E30	VEP80A70A	PC POWER SW P.C.BOARD	1	
E31	VEP80C17A	PC FAN I/F P.C.BOARD	1	
E35	N5CA00000001	CPU P.C.BOARD	1	WITHOUT CPU, CPU FAN
	CR2032	BATTERY	1	INCLUDED FOR CPU P.C.BOARD
E36	N5ECA0000001	SCSI P.C.BOARD	1	
E37	VEK9274	SVGA CARD P.C.BOARD	1	
E38	VEK9246	CAPTURE P.C.BOARD	1	
E39	VEK9247	SDTI P.C.BOARD	1	
E40	VEK9248	M2 P.C.BOARD	1	

Components identified with the mark ⚠ have the special characteristics for safety.
When replacing any of these components, use only the same type.

MECHANICAL COMPONENT ASSEMBLY (3)

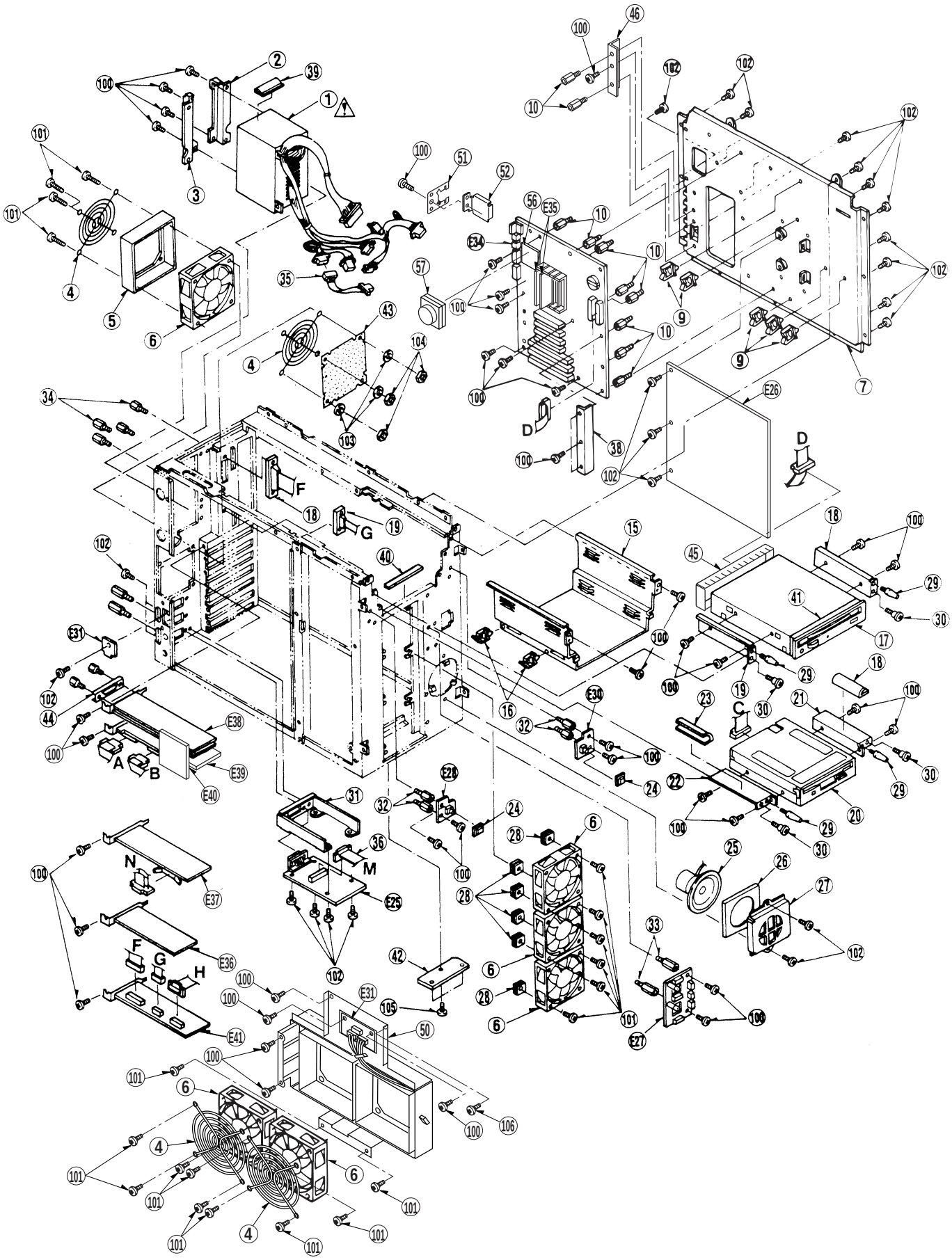

CASING PARTS ASSEMBLY

Ref.No.	Part No.	Part Name & Description	Pcs	Remarks
1	VGM1427	TOP PLATE	1	
2	VGM1428	SIDE PANEL (R)	1	
3	VGM1429	SIDE PANEL (L)	1	
4	VMP5520	HANDLE HOLDER FRAME	2	
5	VYH0265	HANDLE ASS'Y	2	
6	VYP8002	FRONT PANEL ASS'Y	1	
6-1	VMP5576	FRONT EARTH ANGLE	5	
6-2	VMT0867	CUSHION SHEET (UPPER)	1	
6-3	VMT0951	CUSHION SHEET (SIDE)	2	
6-4	VMT0492	CUSHION	1	
7	VMP5633	SEFETY ANGLE	4	
8	VYQ1457	FOOT	4	
9	VMP6752	P.C.BOARD ANGLE	3	
10	VMT0854	P.C.BOARD CUSHION	3	
11	VKN0146	FLITER NET	2	
12	VMZ2325	TOP PANEL BARRIER	1	
13	VMT0778	GASKET (S)	6	
14	VMT0498	GASKET (S)	4	
15	VMT0830	GASKET (S)	8	
17	VMT0822	GASKET (T)	4	
19	VEE0B50	D-SUB 9P CABLE	1	
20	VMT0609	GASKET (B)	2	
21	VMT0880	GASKET (F)	1	
22	VMT0517	CONDUCTIVE GASKET	2	
23	VMT0771	GASKET (A)	1	
24	VSC4842	HANDLE EARTH ANGLE	2	
25	VRF0190	FAN MOTOR	1	L6FALEFH0007
26	VGF0409	FAN GUARD	1	
27	VGM1652	FAN HOLDER ANGLE	1	
100	XSB4+8FZ	SCREW	32	
101	XSB4+16FZS	SCREW	8	
102	XTV3+6F	SCREW	3	
103	XTV3+8G	SCREW	5	
104	XSB4+8FC	SCREW	4	
105	XSB4+10FZS	SCREW	6	
106	XYNV4+K35FCS	SCREW	4	
107	XYN3+F6	SCREW	2	

CASING PARTS ASSEMBLY

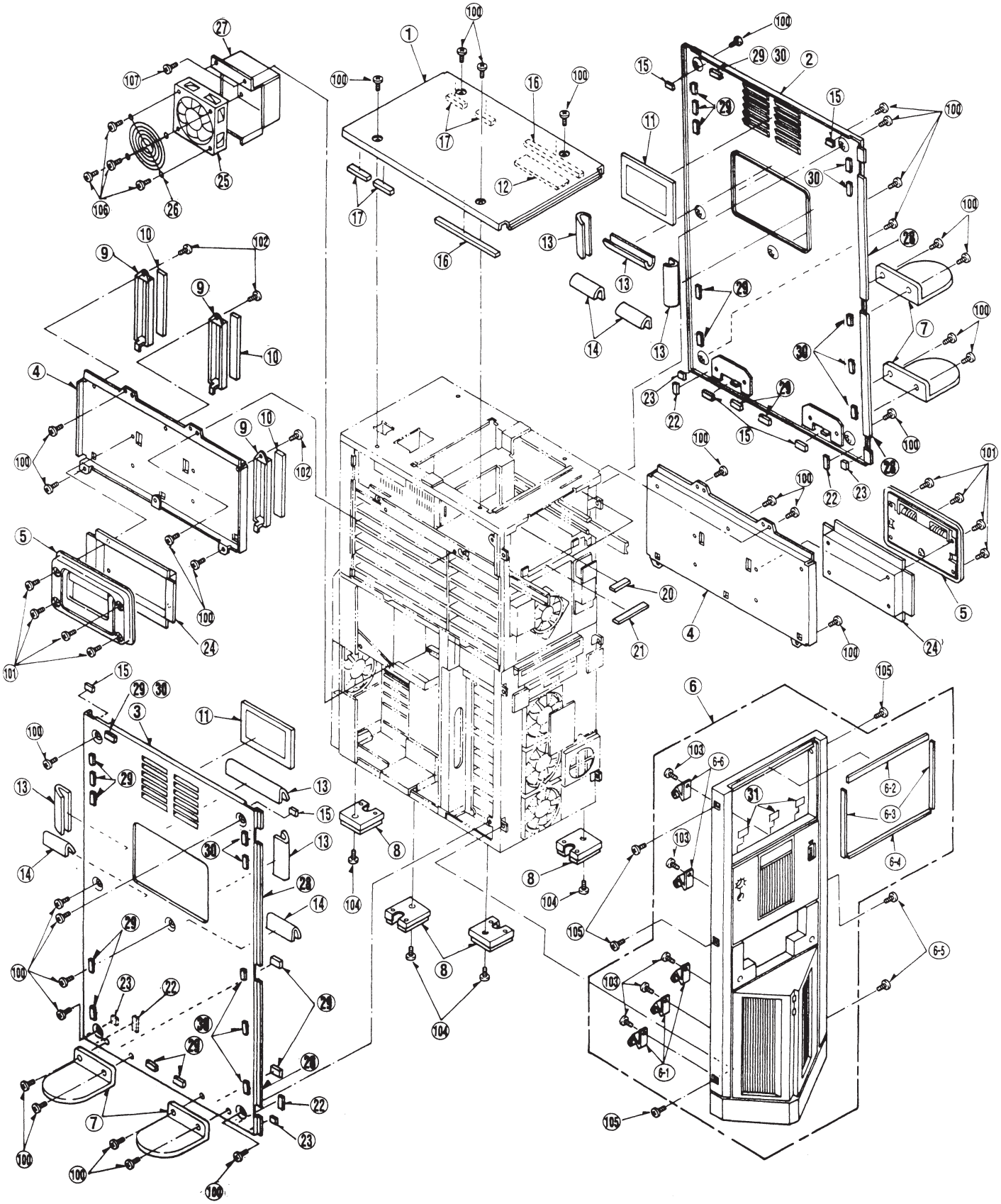

Components identified with the mark ⚠ have the special characteristics for safety.
When replacing any of these components, use only the same type.

FRONT PANEL ASSEMBLY

Ref.No.	Part No.	Part Name & Description	Pcs	Remarks
1	VXA6875	CHASSIS FRAME	1	
2	VMP5536	HOLDER ANGLE (R)	1	
3	VMP6695	HOLDER ANGLE (L)	1	
4	VMP5526	MOTHER HOLDER ANGLE	1	
5	VMP6691	BUF HOLDER ANGLE	1	
6	VSC4686	MECHA BOTTOM SHIELD	1	
7	VGM1430	MECHANICAL COVER	1	
8	VGP5450	MECH FRONT PANEL	1	
9	VHD0383	SUPPORTER SCREW	2	
⚠ 10	VGH4071	DISPLAY	1	
11	VGH4464	MODEL SHEET	1	
12	VYQ1401	CASSETTE GUIDE ASS'Y	1	
13	VGQ4670	MECH LOCK COVER	1	
14	VGQ4653	HENDLE LEVER	1	
15	VKF3318	BLINDER	1	
16	VMB2923	BLINDER SPRING	1	
17	VMP5577	MECHA FRONT SUPPORT ANGLE	1	
18	VMP5538	MECHA LOCK HOLD ANGLE	2	
19	VGQ4652	MECH LOCK ANGLE	2	
20	VMB3179	KICK SPRING	2	
21	VMX2582	WASHER	2	
22	VMS6262	MECHA LOCK SHAFT	2	
23	VMP5576	MECHA LOCK HOLD ANGLE	2	
24	VMT0517	CONDUCTIVE GASKET	1	
25	VMS4992	PIN	1	
27	VGQ4779	P.C.BOARD SUPPORTER	2	
28	VEE0B97	CABLE	1	
29	VEE0C02	CABLE	1	
30	VGQ4779	P.C.BOARD SUPPORTER	1	
31	VEE0C09	CABLE	1	
100	XYN3+K6RS	SCREW	4	
101	XTV3+6F	SCREW	19	
102	XTN4+10G	SCREW	12	
103	XSB3+8	SCREW	4	
104	XTV4+8F	SCREW	6	
105	XTV3+8G	SCREW	4	
106	XUC2FP	E-RING	4	
107	XYE4+EF6	SCREW	1	
E14	VEP85189A	HEAD BUFF1 P.C.BOARD	1	
E15	VEP85190A	HEAD BUFF2 P.C.BOARD	1	
E16	VEP85192A	RF MOTHER P.C.BOARD	1	
E17	VEP80B76A	VTR MOTHER P.C.BOARD	1	
E22	VEP80B77A	AC HEAD I/F P.C.BOARD	1	
E33	VEP80A50A	EJECT P.C.BOARD	1	
E34	VEP80A51A	FRONT LED P.C.BOARD	1	

Components identified with the mark ⚠ have the special characteristics for safety.
When replacing any of these components, use only the same type.

FRONT PANEL ASSEMBLY

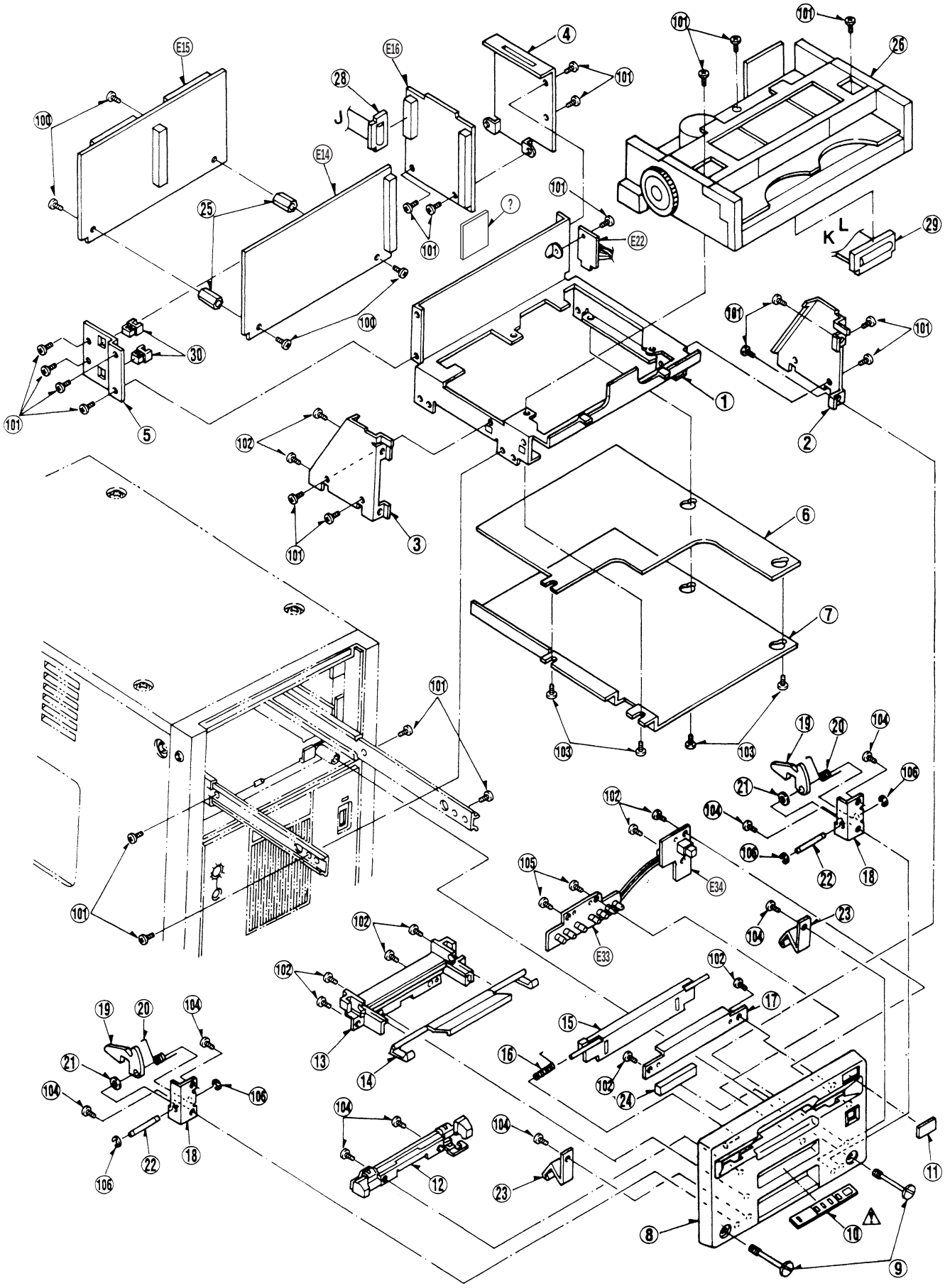

FRAME ASSEMBLY

Ref.No.	Part No.	Part Name & Description	Pcs	Remarks
1	VMP5494	VTR TOP FRAME	1	
2	VMP5515	MECHA FRAME	1	
3	VMP5495	VTR MAIN FRAME	1	
4	VMP6697	PC MAIN FRAME	1	
5	VMP5499	JACK FRAME	1	
6	VMP5528	CABLE COVER	1	
7	VMP5498	VTR SIDE FRAME	2	
8	VMP5500	PC TOP ANGLE (R)	1	
9	VMP5502	PC TOP ANGLE (L)	1	
10	VMP6682	SIDE SUPPORT ANGLE	1	
11	VGM1769	ATX CONNECTOR COVER	1	
12	VML3310	SLIDE RAIL	2	
13	VMP5523	RACK ANGLE	1	
14	VMP5522	LOCK LEVER ANGLE	1	
15	VMB3017	M STOPPER SPRING (2)	1	
16	VGU7158	LOCK RELEASE KNOB	1	
17	VDG0391	OIL DUMPER GEAR	1	
18	VMP5497	LOCK LEVER HOLDER ANGLE	1	
19	VMP5524	VTR POWER ANGLE	1	
20	VMP5510	POWER ANGLE	1	
21	VJF0817	MINI SADDLE	4	
22	VJF0818	WIRE CLAMPER	6	
24	VJF0546	EDGE SADDLE	2	
25	VJF1324	M CLAMP	2	
26	VJF1314	MINI SADDLE	3	
27	VJF1333	CLAMPER	3	
23	VMS6296	FRONT LOCK SPACER	2	
28	VGQ4783	EDGE BUSH	1	
29	VGQ4782	EDGE BUSH	2	
30	VMT0500	GASKET	1	
31	VMT0906	GASKET	1	
32	VMT0905	GASKET	9	
33	VMT0904	GASKET	1	
34	VHD0325	SCREW	1	
35	VSC4769	POWER SHIELD SHEET	1	
36	VGM1432	CPU POWER COVER	1	
38	VMP5596	AUDIO P.COBARD EARTH	1	
39	VMP6683	EXTENSION P.C.BOARD ANGLE	1	
40	VGQ4779	P.C.BOARD SUPPORTER	4	
41	VMM0425	CLIP	2	
42	VMP6922	SLOT COVER	2	
43	VSE0220	SHOCK WATCH	1	
44	VMT0497	GASKET	2	
45	VMT0496	GASKET	1	
46	VMP5809	SIDE PLATE EARTH ANGLE	2	
47	VMT0943	GASKET	4	
48	VYQ1829	FOOT	7	
50	VMT1085	SPACER	4	
51	VMT0953	GASKET	8	
54	VMT1027	CABLE PROTECT SHEET	5	
55	VGQ4779	P.C.B. SUPPORTER	2	
100	XTV3+6F	SCREW	43	
101	XYN3+F6	SCREW	4	
102	XSB4+8FC	SCREW	15	
103	XYN4+C6S	SCREW	4	
104	XSB2+4FZ	SCREW	4	
105	XSB4+8FZ	SCREW	4	

FRAME ASSEMBLY

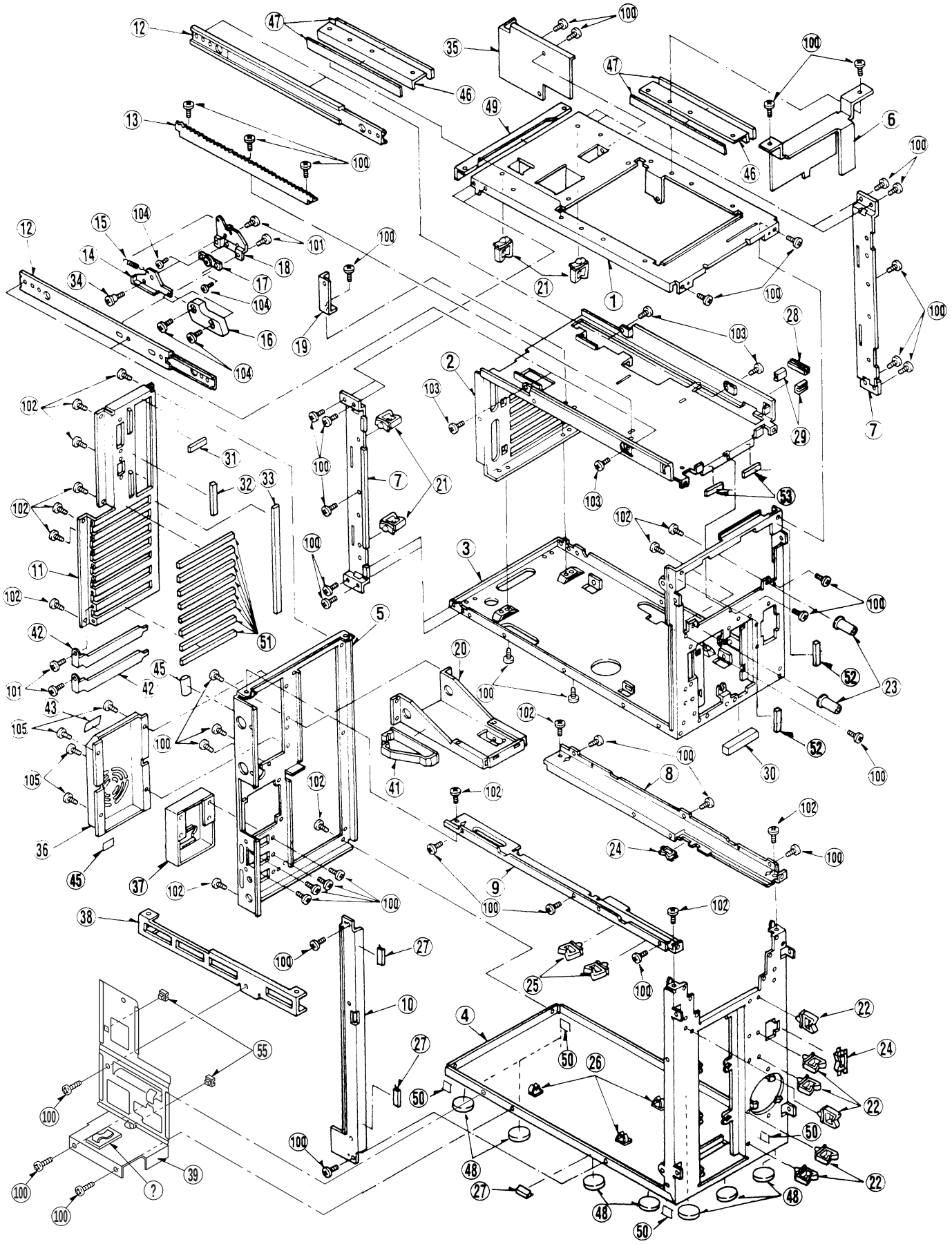

CASSETTE COMPARTMENT ASSEMBLY

Ref.No.	Part No.	Part Name & Description	Pcs	Remarks
1	VXA6593	CASSETTE COMPARTMENT	1	(M)
2	VMS5865	MAIN SHAFT	1	
3	VMA9849	TOP PLATE	1	
4	VXA6572	FRONT GUIDE 1 ASS'Y	1	
5	VMB3075	M GUIDE SPRING	2	
6	VML3191	M GUIDE RIGHT LEVER	1	
7	VML3192	M FRONT GUIDE	2	
8	VML3190	M GUIDE LEFT LEVER	1	
9	VML3397	CASSETTE PROTECT PLATE	1	
10	VMA9760	L OPENER	1	
12	VMB2926	SPRING	1	
13	VML2A50	BLINDER PANEL OPENER	1	
14	VXA6074	R SIDE PLATE 1 ASS'Y	1	
15	VML3282	SUB RAIL (R)	1	
16	VEK7695	SIDE FLEXIBLE	1	
17	VXA5766	MAIN RACK R ASS'Y	1	
18	VDG1156	WIPER RACK	2	
20	VDB1395	MAIN SHAFT ANGLE	2	
21	VDG1412	INTERLOCK GEAR	2	
22	VML3193	OPENER DRIVE ARM	1	
23	VXL2692	OPENER ANGLE ASS'Y	1	
24	VMB2979	SPRING	1	
25	VXA6072	SIDE PLATE L 1 ASS'Y	1	
26	VML3281	SUB RAIL (L)	1	
27	VDG1413	INTERAMEDIATE GEAR	1	
28	VDP1643	WIPER ROLLER	2	
29	VDG1414	CLUTCH GEAR	1	
30	VMB2980	CLUTCH SPRING	1	
31	VDG1236	WORM WHEEL	1	
32	VXA5848	MOTOR ANGLE (A) ASS'Y	1	
33	VXP1797	E.E SLOT IN WORM ASS'Y	1	
34	VXA5597	MOTOR ASS'Y	1	(M)
35	VMA9673	EMARGENCY ANGLE	1	
36	VEK7793	MOTOR P.C.BOARD	1	
37	VMA9668	HOLDER PLATE	1	
38	VEK7715	HOLDER FLEXIBLE ASS'Y	1	
39	VXA6075	MAIN RACK (L) ASS'Y	1	
40	VML3485	WIPER ARM (R)	1	
41	VMB3391	WIPER ARM (L)	1	
42	VDG1163	WIPER GEAR	2	
43	VMB3390	WIPER SPRING (L)	1	
44	VML3484	WIPER SPRING (R)	1	
45	VDP1642	CASSETTE GUIDE ROLLER (2)	2	
46	VDP1641	CASSETTE GUIDE ROLLER (1)	2	
47	VXA5757	CASSETTE HOLDER 1 ASS'Y	1	
48	VXA5758	ROD L	1	
49	VXA5759	ROD R	1	
50	VMB3064	SLIDE SPRING	2	
51	VML3249	SIDE GUIDE L	1	
52	VML3250	SIDE GUIDE R	1	
53	VMB3061	SLIDE GUIDE SPRING L	1	
54	VMB3062	SLIDE GUIDE SPRING R	1	
55	VMS6108	KICK OFF ROD SHAFT	2	
56	VML2A54	KICK OFF ARM L	1	
57	VML2A55	KICK OFF ARM R	1	
58	VMB2928	KICK OFF SPRING	2	
59	VML2A53	CASSETTE HOLDER ARM	2	
60	VMB2927	CASSETTE HOLDER SPRING	2	
61	VMX2833	M-L DETECT ROLLER	2	
62	VMS5882	CASSETTE HOLDER SHAFT	1	
63	VMB3253	M-L DETECT SPRING	2	
64	VMX2559	CASSETTE PRESSURE ROLLER(2)	3	
65	VMX2524	CASSETTE PRESSURE ROLLER(1)	1	
66	VDG1246	EMARGENCY GEAR	1	
67	VMB3109	EMARGENCY SPRING	1	
68	VMZ2661	FRONT GUIDE COVER	1	
71	VMX0653	CUT WASHER	4	
72	VMX0967	CUT WASHER	14	
73	VMX1061	WASHER	4	
74	XQN16+A2	SCREW	8	
75	XQN2+CF3	SCREW	4	

Ref.No.	Part No.	Part Name & Description	Pcs	Remarks
76	XQN2+A2	SCREW	2	
77	XYN2+C4	SCREW	12	
78	XQN2+A3	SCREW	5	
79	LMHD16064	SCREW	10	
80	XWGV2Y4G	WASHER	2	
81	XWGV2Z5G	WASHER	2	
E24	VEP80856A	CARRIGE P.C.BOARD	1	

CASSETTE COMPARTMENT ASSEMBLY

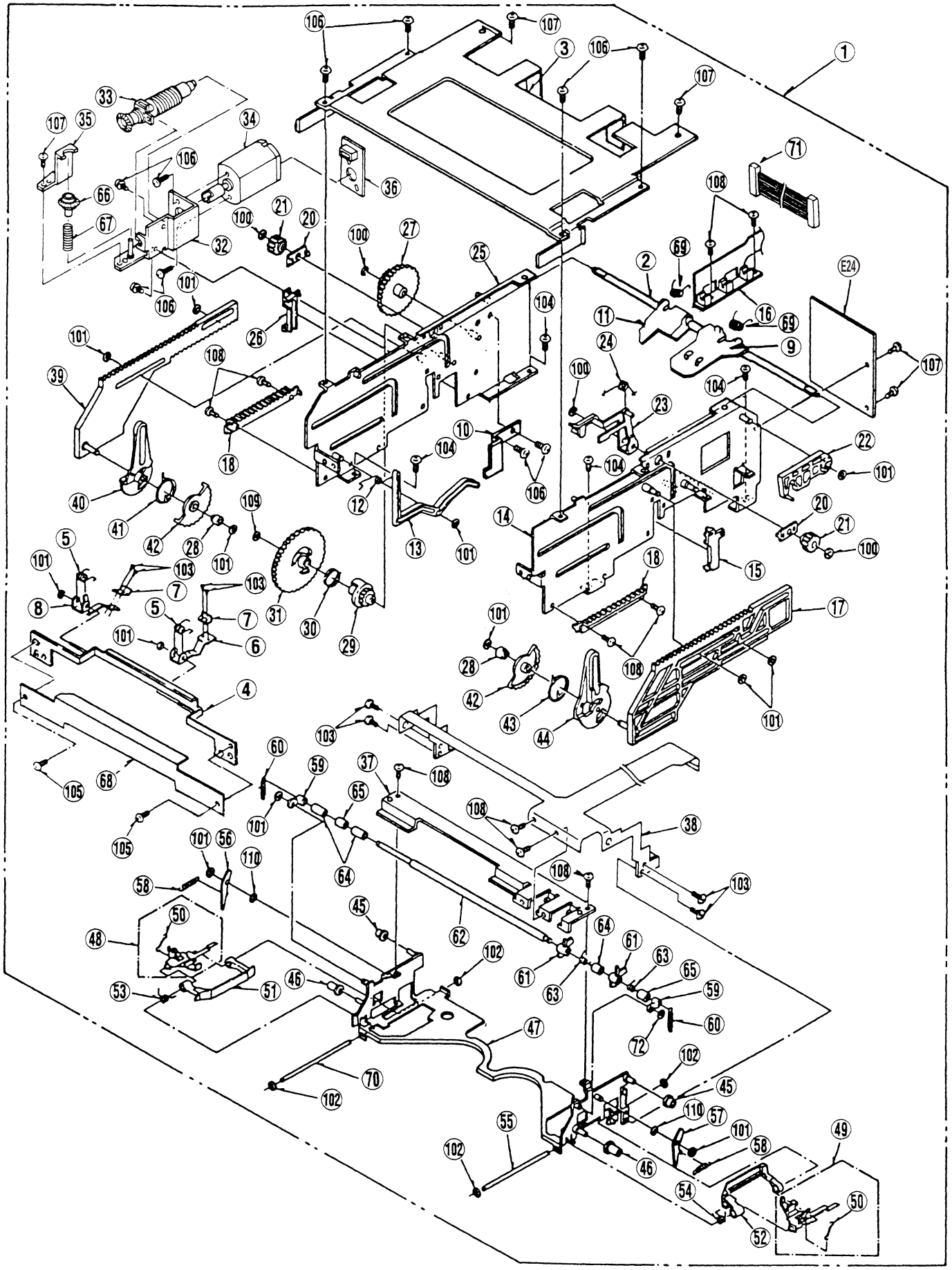

MECHANICAL CHASSIS ASSEMBLY (1)

Ref.No.	Part No.	Part Name & Description	Pcs	Remarks
1	VXA6772	MOTOR BRACKET	1	
1-1	VEM0726	MOTOR ASS'Y	1	(M)
1-4	VEK7927	INSULLATION SENSOR	1	EYHS77Y7
1-5	VEK8982	FG SENSOR	1	
1-6	VXA6656	CLEANER SOLENOID ASS'Y	1	
1-6A	VSJ0226	CLEANER SOLENOID	1	(M)
1-7	VMM0441	CLEANER ROD	1	
1-8	VMB3454	CLEANER SPRING	1	
1-9	VES0925	MODE SW ASS'Y	1	(M)
1-10	VDG1426	WORM WHEEL	1	
1-11	VXP2029	WORM ASS'Y	1	
2	VED0466	A/C HEAD 1 ASS'Y	1	(M)
3	VMA0F40	HORIZONTAL FIX BASE	1	
4	VXA6658	HIGHT FIX BASE	1	
5	VMS5987	AZIMUTH SLEEVE	1	
6	VMB2937	A/C HEAD ADJUST SPRING	1	
7	VHD0045	NYLON NUT	1	
8	VMA0F93	CABLE GUIDE	1	
9	VMA0E98	SOLENOID HOLD ANGLE	1	
10	VSJ0227	PINCH SOLENOID	1	(M)
11	VMA0E90	SOLENOID BASE	1	
12	VMB2948	SPRING	1	
13	VDG1434	EM GEAR	1	
14	VDG1437	CAM INTERMEDIATE GEAR B	1	
15	VMX2993	EM SLEEVE	1	
16	VMB3440	EM GEAR SPRING	1	
17	VDG1423	CAM INTERMEDIATE GEAR A	1	
18	VXP2037	EMERGENCY CONNECTION GEAR	1	
19	VXA6688	S4 POST BASE ASS'Y	1	(M)
20	VXL3005	S TENSION ARM ASS'Y	1	(M)
21	VDG1438	TENSION LEG GEAR	1	
22	VDG1424	MAIN CAM GEAR	1	(M)
23	VXA6647	S-LOAD SECTOR GEAR	1	
24	VDG1422	S-INTERMEDIATE GEAR	1	
25	VXA6717	EM ROD ASS'Y	1	
26	VEK8936	LED ASS'Y	1	
27	LMHD16064	SCREW	4	
28	VXA6700	GENSION LEG SECTOR GEAR	1	
29	VXA6644	TENSION SENSOR ASS'Y	1	
30	VXL2986	T5 ARM (1) ASS'Y	1	(M)
30-1	VXL2989	T5 DRIVE LEVER (A)	1	
30-2	VXL2991	T5 DRIVE LEVER (B)	1	
30-3	VMB3436	T5 CHARGE SPRING SPRING	1	
30-4	VMX2982	T5 ARM SLEEVE	1	
31	VMA0E33	T6 SPRING PLATE	1	
32	VMB3418	T5 THRUST SPRING	1	
33	VEK8937	TENSION SENSOR	1	
34	VMD3910	TENSION BASE	1	
35	VMB3434	AC HIGHT SPRING	1	
36	VXA6703	PINCH ELEVATOR ASS'Y	1	
37	VXA6646	S LOADING ASS'Y	1	(M)
37-1	VMB3425	S-LOADING SPRING	1	
37-2	VDG1427	S-LOADING GEAR	1	
38	VXA6648	T LOADING ASS'Y	1	(M)
38-1	VDG1426	R-LOADING SPRING	1	
38-2	VDG1428	R-LOADING GEAR	1	
39	VXL3008	SOLENOID TURN ARM	1	
40	VML3520	SOLENOID INTERMEDIATE ARM	1	
41	VXL3002	PINCH TURN ARM	1	
42	VXL2977	T6 ARM	1	(M)
43	VXL3011	ELEVATOR DRIVE ASS'Y	1	
44	VEG1530	CYLINDER UNIT	1	(M)
44-1	VMD3885	CAP	1	
45	VEM0717	CAPSTAN ASS'Y	1	(M)
46	VXL3028	CLEANING ARM	1	(M)
47	VXQ0439	SCREW	3	
48	VXL3040	PINCH ARM	1	(M)
71	XQN2+A3	SCREW	1	
72	XQN2+A2	SCREW	3	
73	XQN2+CF3	SCREW	3	
74	XVE2B4FP	SCREW	1	

Ref.No.	Part No.	Part Name & Description	Pcs	Remarks
75	XQN2+A5	SCREW	2	
76	VMX0967	CUT WASHER	5	
77	XQN16+A2	SCREW	2	
78	XVE2B12FP	HEX SCREW	1	
79	XVE2B4FZ	HEX SCREW	2	
80	XWA2B	WASHER	2	
81	XWG2A	WASHER	3	
82	XXE2A6FP	HEX SCREW	2	
83	XYN2+K5	SCREW	2	
84	VMX1599	CUT WASHER	3	
85	XQN2+CF4	SCREW	4	
86	VMX1061	WASHER	5	
87	XYN2+C6	SCREW	4	
88	VMX2027	CUT WASHER	1	
89	XWGV2Y4G	WASHER	1	
90	XUC12FP	E-RING	2	
91	XWGV15Z32G	WASHER	2	
92	XQN2+B3FZ	SCREW	3	
93	XQN16+A3	SCREW	1	
94	VMX0653	CUT WASHER	1	
*	VXY1607Z1	MECHANIZM ASS'Y	1	(M)

MECHANICAL CHASSIS ASSEMBLY (1)

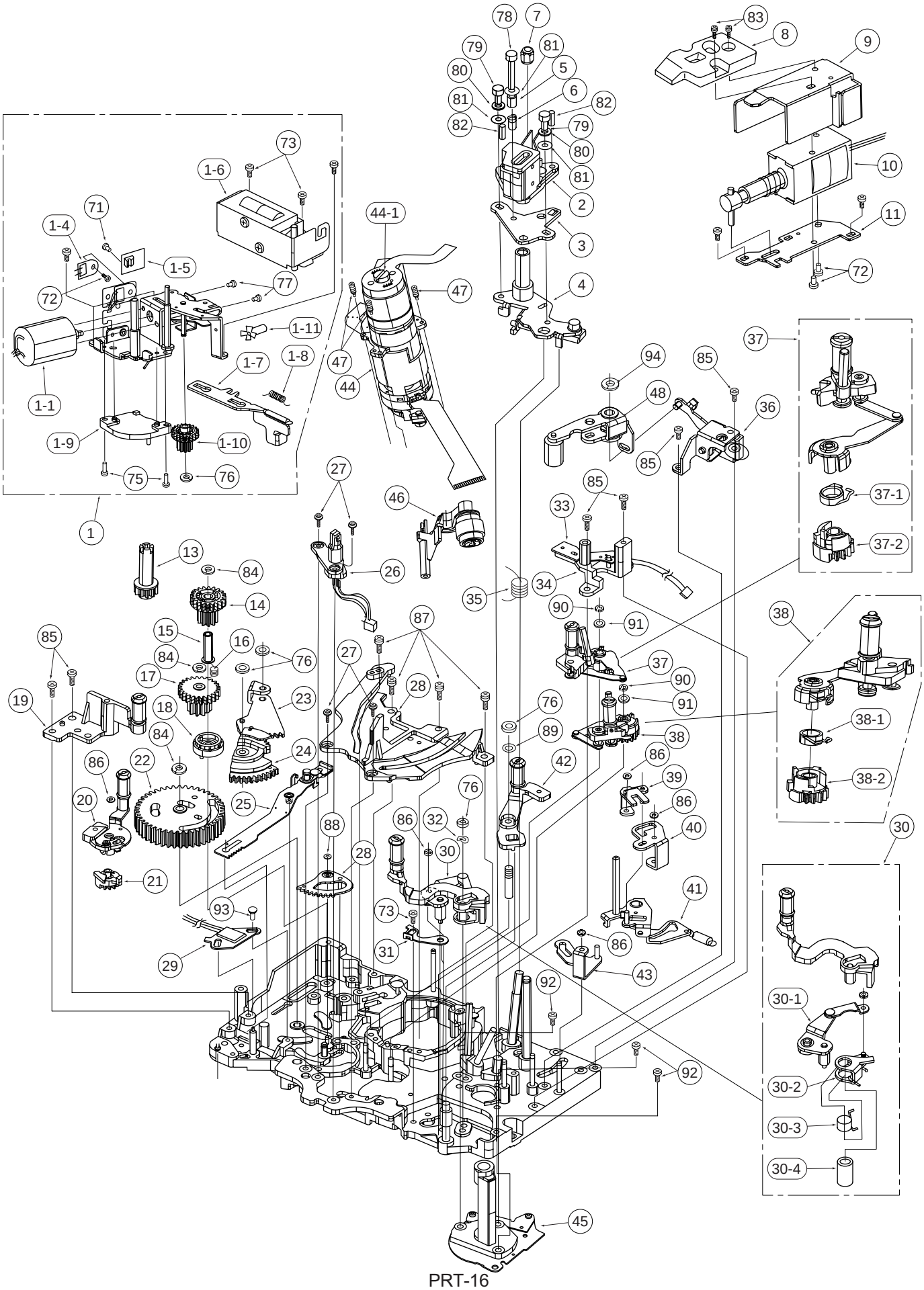

Components identified with the mark ⚠ have the special characteristics for safety.
When replacing any of these components, use only the same type.

MECHANICAL CHASSIS ASSEMBLY (2)

Ref.No.	Part No.	Part Name & Description	Pcs	Remarks
1	VXL3007	PINCH DRIVE ARM	1	
2	VXL3010	INTERMEDIATE ARM	1	
3	VXL3043	MAIN CAM ARM	1	
4	VMA0E80	MAIN ROD ASS'Y	1	
5	VXA6649	T-ROD SECTOR GEAR	1	
6	VXL3024	IDLER ARM ASS'Y	1	
7	VMB3445	TENSION LEG SECTOR GEAR	1	
8	VMB3453	EM ROD SPRING	1	
51	VMX1061	WASHER	1	
52	VMX0967	CUT WASHER	2	
53	VMX2391	CUT WASHER	1	

Ref.No.	Part No.	Part Name & Description	Pcs	Remarks

Components identified with the mark ⚠ have the special characteristics for safety.
When replacing any of these components, use only the same type.

MECHANICAL CHASSIS ASSEMBLY (2)

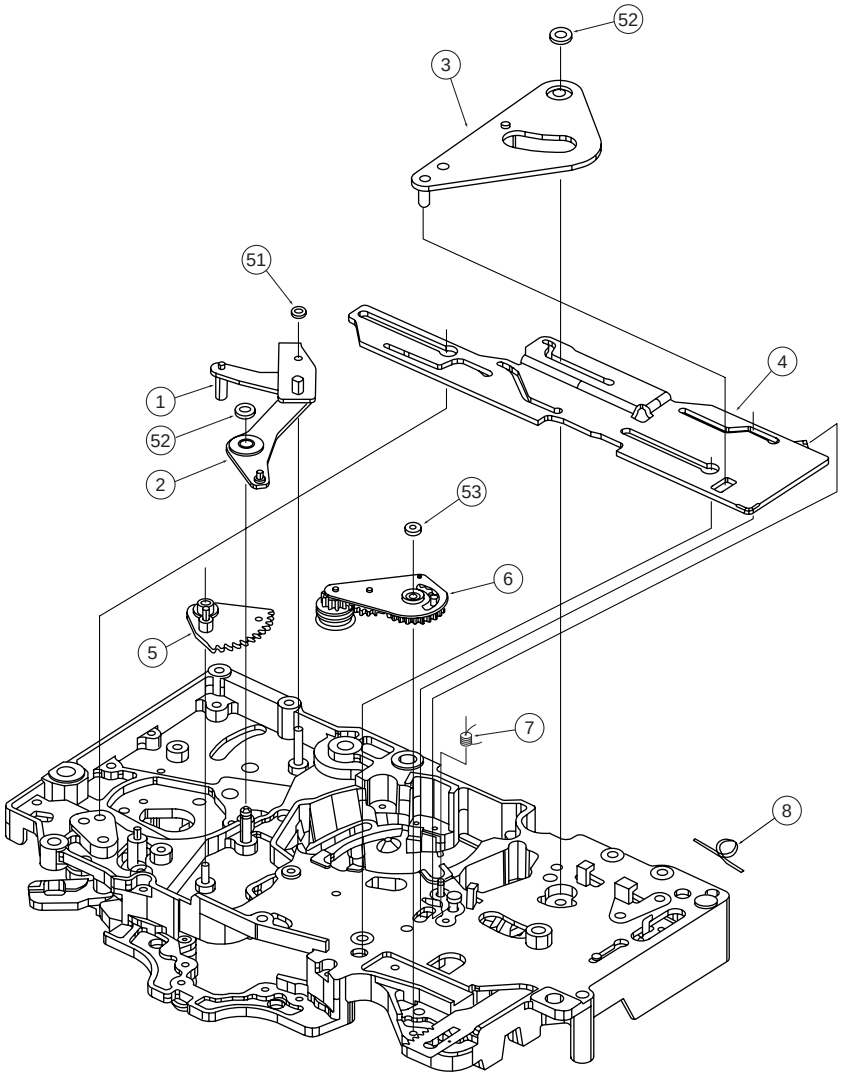

Components identified with the mark ⚠ have the special characteristics for safety.
When replacing any of these components, use only the same type.

PACKING PARTS ASSEMBLY

Ref.No.	Part No.	Part Name & Description	Pcs	Remarks
1	VPG9132	PACKING CASE (T)	1	
2	VPK2090	CUSHION CASE	2	
3	VPN4894	FRONT CUSHION	2	
4	VPN4730	CUSHION (F.T)	1	
5	VPN4731	CUSHION (B.F)	1	
6	VPN4732	CUSHION (T.B)	1	
7	VPN4733	CUSHION (B.B)	1	
8	VPG9133	PACKING CASE (B)	1	
9	VPK2091	ACCESSORY CASE	1	
⚠ 10	VJA0801	POWER CODE	1	
11	VPF0533	AIR CAP	2	
⚠ 12	VQT9124	OPERATING INSTRUCTIONS	1	
13	PP-901WP	JOINT	4	
14	VQL9820	LABEL	2	
15	VXF0170	EMARGENCY EJECT ASS'Y	1	
16	XSB4+8FZ	SCREW	8	
18	VYQ1830	SAFETY ANGLE	24	
20	VPN4847	FIXING SHEET	1	
21	VEK8363	KEY BOARD	1	
23	VEK8260	MOUSE	1	
24	VPF0366	AC CODE BAG	2	
27	VLP0383	FERRITE CORE	4	
28	VPF0507	POLYETHYLENE BAG	1	
29	VPK2150	ACCESSORY BOX	1	
30	VPN4843	CUSHION A	2	
31	VPN4844	CUSHION B	2	
32	VLP0407	FERRITE CORE	2	
35	VPK2091	ACCESSORY CASE	1	
36	VSQ0819	DC LINE CORE	1	J0KG00000013
37	VPN4891	REAR CUSHION	2	
38	VPN4892	FRONT CUSHION SHEET	1	
39	VPN4893	REAR CUSHION SHEET	1	
42	VSE0219	SHOCK WATCH	1	
43	VPF1016	SCREW BAG	2	
44	VPF0115	POLYETHYLENE BAG	2	
45	VPG6116	ACCESSORY CASE	1	
46	VPF0929	SET PROTECT COVER	1	

Components identified with the mark ⚠ have the special characteristics for safety.
When replacing any of these components, use only the same type.

PACKING PARTS ASSEMBLY

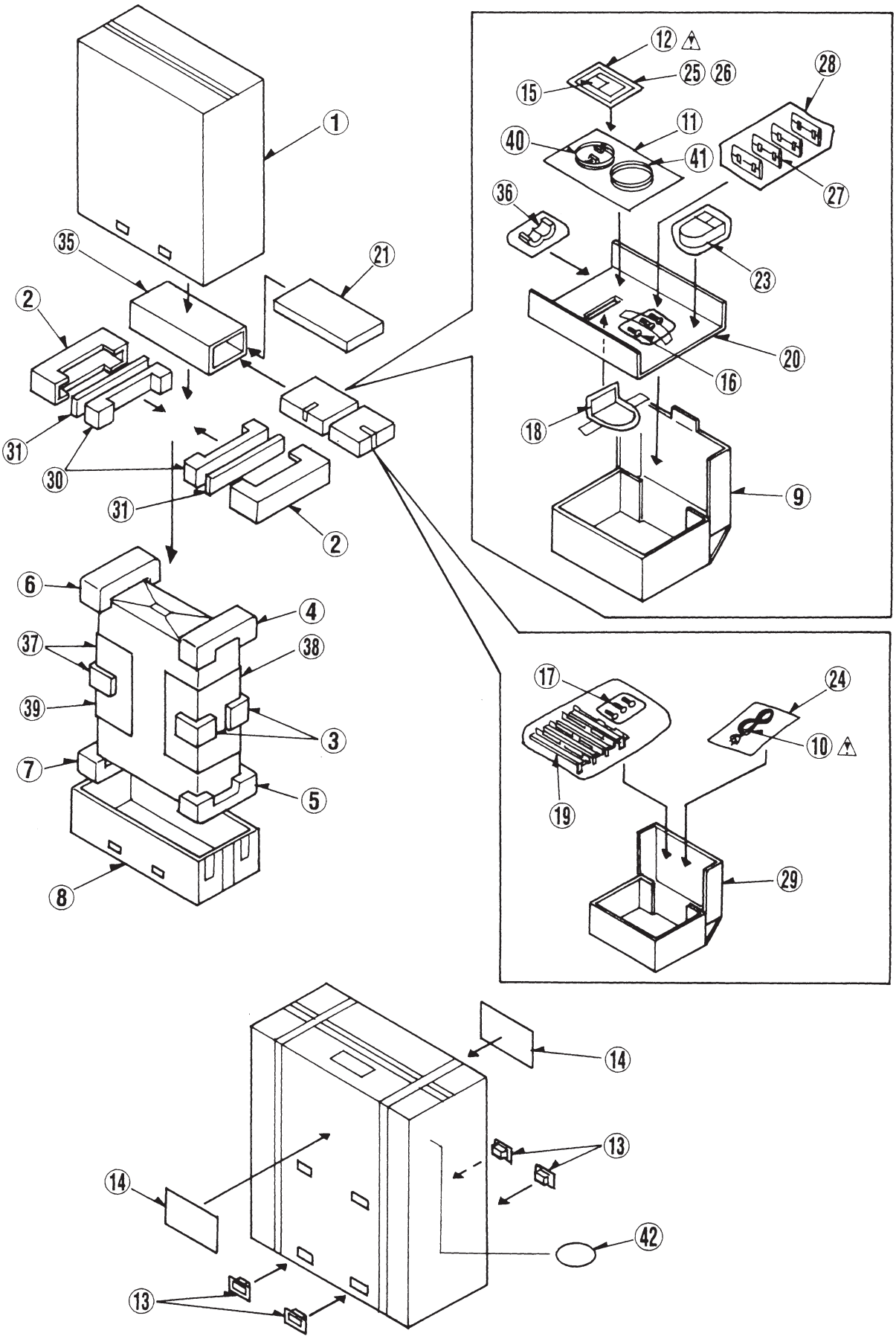

CABLE LIST

NUMBER	CONNECTION BETWEEN			
	P.C.B. NAME	CONNECTOR NUMBER	P.C.B. NAME	CONNECTOR NUMBER
VEC0977	MECHA. I／F	P1	VTR MOTHER	P29
VEC0977	MECHA. I／F	P3	VTR MOTHER	P30
VEC0977	MECHA. I／F	P4	VTR MOTHER	P31
VEC0978	RF MOTHER	P5007	VTR MOTHER	P22
VEC0978	RF MOTHER	P5008	VTR MOTHER	P23
VEC0978	RF MOTHER	P5006	VTR MOTHER	P24
VEC0978	RF MOTHER	P5005	VTR MOTHER	P25
VEC0978	AC HEAD I／F	P2	H5 A MONI MIC	P2
VEC0978			H5 A MONI MIC	P3
VEC0978	EJECT		VTR MOTHER	P33
VEC0979	AUDIO REAR	P1	VTR MOTHER	P42
VEC0979	AUDIO REAR	P2	VTR MOTHER	P43
VEC0980	POWER LED	P1	VTR MOTHER	P47
	HP/MIC JACK	P2		
VEC0980	HP/MIC JACK	P1	VTR MOTHER	P44
VEC0982	PC POWER/RESET SW		SCSI MOTER	P104
VEC0982	PC FRONT I／F	P1	SCSI MOTER	P103
VEC0982	PC FRONT I／F	P2	SCSI MOTER	P106
VEE0B90	VTR POWER	P1013	VTR MOTHER	P34
VEE0B90	VTR POWER	P1013	VTR MOTHER	P37
VEE0B90	VTR POWER	P1011	VTR MOTHER	P36
VEE0B91	VTR POWER	P1012	VTR MOTHER	P35
VEE0B96	VTR POWER SW		PC AC PLAG	
VEE0B96	F G		PC AC PLAG	
VEE0B97	RF MOTHER	P5004	VTR MOTHER	P27
VEE0B98	FRONT PANEL		VTR MOTHER	P32
VEE0C02	MECHA. I／F	P2	VTR MOTHER	P28
VEE0C04	FAN I／F	P3	SPEAKER	
VEE0C09	FRONT EJECT PB		FRONT LED PB	
VEE0C10	RF MOTHER	P5003	VTR MOTHER	P26
VEE0E50	AC INLET		VTR POWER	P1101
VEE0E51	AC INLET		VTR POWER	P1101
VEE0E52	VTR POWER SW		PC POWER SUPPLY	
VEE0E53	VTR POWER SW		PC POWER SUPPLY	
VEE0M81	SCSI CARD	J6,J4	SCSI MOTER	P1, P51
VEE0M82	CPU MOTHER		CD ROM	
VEE0M82	CD ROM		IDE−HDD	
VEE0M83	CPU MOTHER		FDD	
VEE0M97	CPU MOTHER		SCSI MOTER	P102
VEE0M97	CPU MOTHER		SCSI MOTER	P101
VEE0M97	CPU MOTHER		SCSI MOTER	P101
VEE0M97	SCSI CARD	J8	SCSI MOTER	P101
VEE0M98	PC FAN I／F	P4	SCSI MOTER	P105
VEE0M99	CPU FAN		SCSI MOTER	P107
VEE0N00	SCSI MOTER	P108	VTR MOTHER	P45
VEE0N03	DIGITAL OUT		SCSI MOTER	P109
VEE0N04	VIDEO REAR	P1	VTR MOTHER	P40
VEE0N05	AUDIO REAR	P3	VTR MOTHER	P41
VEE9651A680	MATROX SDTI	J6	REC PB	J602
VEE9652A680	MATROX SDTI	J7	REC PB	J600
VEE9653A650	MATROX SDTI	J4	REC PB	J500
K1PB20A00015	REMOTE I/O		VTR MOTHER	P39

ELECTRICAL REPLACEMENT PARTS LIST

Ref.No.	Part No.	Part Name & Description	Pcs	Remarks
■ E1	VEP82230C	F1 SERVO P.C.BOARD	1	(RTL)
■ E2	VEP86294C	F2 SYSCON P.C.BOARD	1	(RTL)
■ E3	VEP83534A	F4 REC PB P.C.BOARD	1	(RTL)
■ E4	VEP83494A	F5 VIDEO OUT P.C.BOARD	1	(RTL)
■ E5	VEP83385B	422/844 DA P.C.BOARD	1	(RTL)
■ E6	VEP84343A	F6 A PROC P.C.BOARD	1	(RTL)
■	VEP84360A	F6 SUB A JOG P.C.BOARD	1	(RTL)FOR VEP84343A
■ E7	VEP83409C	F7 VIDEO IN P.C.BOARD	1	(RTL)
■ E8	VEP85184C	H1 EQ1 P.C.BOARD	1	(RTL)
■ E9	VEP85184D	H2 EQ2 P.C.BOARD	1	(RTL)
■ E10	VEP85185B	H3 EQ MAIN P.C.BOARD	1	(RTL)
■ E11	VEP84366A	H5 A MONI MIC P.C.BOARD	1	(RTL)
■ E12	VEP84365A	H6 A DA P.C.BOARD	1	(RTL)
■ E13	VEP84364A	H7 A AD P.C.BOARD	1	(RTL)
■ E14	VEP85189A	HEAD BUFF 1 P.C.BOARD	1	(RTL)
■ E15	VEP85190A	HEAD BUFF 2 P.C.BOARD	1	(RTL)
■ E16	VEP85192A	RF MOTHER P.C.BOARD	1	(RTL)
■ E17	VEP80B76A	VTR MOTHER P.C.BOARD	1	(RTL)
■ E18	VEP81183C	POWER 1 P.C.BOARD	1	(RTL)
■ E19	VEP81184F	POWER 2 P.C.BOARD	1	(RTL)
■ E20	VEP80A58A	POWER INT P.C.BOARD	1	(RTL)
■ E21	VEP84363A	HP/MIC JACK P.C.BOARD	1	(RTL)
■ E22	VEP80B77A	AC HEAD I/F P.C.BOARD	1	(RTL)
■ E23	VEP82231A	MECH I/F P.C.BOARD	1	(RTL)
■ E24	VEP80856A	CARRIGE P.C.BOARD	1	(RTL)
■ E25	VEP83533A	VIDEO REAR P.C.BOARD	1	(RTL)
■ E26	VEP84362B	AUDIO REAR P.C.BOARD	1	(RTL)
■ E27	VEP80A63A	FAN I/F P.C.BOARD	1	(RTL)
■ E28	VEP80A62A	RESET SW P.C.BOARD	1	(RTL)
■ E29	VEP80A72A	MAIN POWER LED P.C.BOARD	1	(RTL)
■ E30	VEP80A70A	PC POWER SW P.C.BOARD	1	(RTL)
■ E31	VEP80C17A	PC FAN I/F P.C.BOARD	1	(RTL)
■ E32	VEP80B93A	SCSI MOTHER P.C.BOARD	1	(RTL)
■ E33	VEP80A50A	EJECT P.C.BOARD	1	(RTL)
■ E34	VEP80A51A	FRONT LED P.C.BOARD	1	(RTL)
■ E35	N5CA00000001	CPU P.C.BOARD	1	(RTL)
■ E36	N5ECA0000001	SCSI P.C.BOARD	1	(RTL)
■ E37	VEK9274	SVGA CARD P.C.BOARD	1	(RTL)
■ E38	VEK9246	CAPTURE P.C.BOARD	1	(RTL)
■ E39	VEK9247	SDTI P.C.BOARD	1	(RTL)
■ E40	VEK9248	M2 P.C.BOARD	1	(RTL)
■ E41	VEK8247A	REMOTE P.C.BOARD	1	(RTL)

Ref.No.	Part No.	Part Name & Description	Pcs	Remarks
■ E1	VEP82230C	F1 SERVO P.C.BOARD	1	(RTL)
C1,C2	ECUX1H103KBV	C.CAPACITOR CH 50V 0.01U	2	
C3	EEVHB1C220	E.CAPACITOR 16V 22U	1	
C4	EEVHB1C470	E.CAPACITOR 16V 47U	1	
C5,C6	EEVHB1C220	E.CAPACITOR 16V 22U	2	
C7,C8	ECUX1H103KBV	C.CAPACITOR CH 50V 0.01U	2	
C9	ECUX1H101JCV	C.CAPACITOR CH 50V 100P	1	
C10,11	ECUX1H222KBV	C.CAPACITOR CH 50V 2200P	2	
C12	ECUX1H102JCV	C.CAPACITOR CH 50V 1000P	1	
C13-20	ECUX1H103KBV	C.CAPACITOR CH 50V 0.01U	8	
C21,22	ECUX1H332KBV	C.CAPACITOR CH 50V 3300P	2	
C23	EEVHB0J330	E.CAPACITOR 6.3V 33U	1	
C25-29	ECUX1H103KBV	C.CAPACITOR CH 50V 0.01U	5	
C100	ECUX1H103KBV	C.CAPACITOR CH 50V 0.01U	1	
C101,02	ECUX1H102JCV	C.CAPACITOR CH 50V 1000P	2	
C103,04	ECUX1H100DCV	C.CAPACITOR CH 50V 10P	2	
C105,06	ECUX1H102JCV	C.CAPACITOR CH 50V 1000P	2	
C107	ECUX1H103KBV	C.CAPACITOR CH 50V 0.01U	1	
C108,09	EEVHB1C220	E.CAPACITOR 16V 22U	2	
C110-12	ECUX1H103KBV	C.CAPACITOR CH 50V 0.01U	3	
C113,14	EEVHB1C220	E.CAPACITOR 16V 22U	2	
C115,16	ECUX1H103KBV	C.CAPACITOR CH 50V 0.01U	2	
C150	ECUX1H103KBV	C.CAPACITOR CH 50V 0.01U	1	
C151,52	ECUX1H100DCV	C.CAPACITOR CH 50V 10P	2	
C153-56	ECUX1H102JCV	C.CAPACITOR CH 50V 1000P	4	
C157	ECUX1H103KBV	C.CAPACITOR CH 50V 0.01U	1	
C158,59	EEVHB1C220	E.CAPACITOR 16V 22U	2	
C160-62	ECUX1H103KBV	C.CAPACITOR CH 50V 0.01U	3	
C163,64	EEVHB1C220	E.CAPACITOR 16V 22U	2	
C165	ECUX1H103KBV	C.CAPACITOR CH 50V 0.01U	1	
C200	ECUX1H103KBV	C.CAPACITOR CH 50V 0.01U	1	
C201,02	ECUX1H100DCV	C.CAPACITOR CH 50V 10P	2	
C203-06	ECUX1H102JCV	C.CAPACITOR CH 50V 1000P	4	
C207	ECUX1H103KBV	C.CAPACITOR CH 50V 0.01U	1	
C208,09	EEVHB1C220	E.CAPACITOR 16V 22U	2	
C210,11	ECUX1H103KBV	C.CAPACITOR CH 50V 0.01U	2	
C212,13	EEVHB1C220	E.CAPACITOR 16V 22U	2	
C214	ECUX1H103KBV	C.CAPACITOR CH 50V 0.01U	1	
C250,51	ECUX1C224ZFV	C.CAPACITOR CH 16V 0.22U	2	
C252	ECUX1H103KBV	C.CAPACITOR CH 50V 0.01U	1	
C253	ECUX1C105KBM	C.CAPACITOR CH 16V 1U	1	
C254	ECUX1H271JCV	C.CAPACITOR CH 50V 270P	1	
C255	ECUX1H103KBV	C.CAPACITOR CH 50V 0.01U	1	
C256	ECUX1C104KBV	C.CAPACITOR CH 16V 0.1U	1	
C257	ECUX1H103KBV	C.CAPACITOR CH 50V 0.01U	1	
C258	EEVHB1H4R7	E.CAPACITOR 50V 4.7U	1	
C259	EEVHB1C100	E.CAPACITOR 16V 10U	1	
C260	ECUX1H103KBV	C.CAPACITOR CH 50V 0.01U	1	
C261	ECUX1H331JCV	C.CAPACITOR CH 50V 330P	1	
C262	ECUX1H123KBV	C.CAPACITOR CH 50V 0.012U	1	
C263	ECUX1C224ZFV	C.CAPACITOR CH 16V 0.22U	1	
C264-67	ECUX1H103KBV	C.CAPACITOR CH 50V 0.01U	4	
C269,70	ECUX1H103KBV	C.CAPACITOR CH 50V 0.01U	2	
C300-03	ECUX1H103KBV	C.CAPACITOR CH 50V 0.01U	4	
C304-06	ECUX1C104KBV	C.CAPACITOR CH 16V 0.1U	3	
C307	EEVHB1C100	E.CAPACITOR 16V 10U	1	
C308,09	ECUX1C104KBV	C.CAPACITOR CH 16V 0.1U	2	
C310,11	ECUX1H150JCV	C.CAPACITOR CH 50V 15P	2	
C312,13	ECUX1H221JCV	C.CAPACITOR CH 50V 220P	2	
C314-19	ECUX1C104KBV	C.CAPACITOR CH 16V 0.1U	6	
C320	EEVHB0J330	E.CAPACITOR 6.3V 33U	1	
C321-23	ECUX1H472KBV	C.CAPACITOR CH 50V 4700P	3	
C324-29	ECUX1C104KBV	C.CAPACITOR CH 16V 0.1U	6	
C400,01	ECUX1H102KBV	C.CAPACITOR CH 50V 1000P	2	F1H1H102A009
C402,03	ECUX1H103KBV	C.CAPACITOR CH 50V 0.01U	2	
C450-54	ECUX1C104KBV	C.CAPACITOR CH 16V 0.1U	5	
C500-07	ECUX1H103KBV	C.CAPACITOR CH 50V 0.01U	8	
C508	EEVHB1C100	E.CAPACITOR 16V 10U	1	
C509	ECUX1C104KBV	C.CAPACITOR CH 16V 0.1U	1	
C510,11	ECUX1H103KBV	C.CAPACITOR CH 50V 0.01U	2	
C512	ECUX1H272KBV	C.CAPACITOR CH 50V 2700P	1	
C513,14	ECUX1H103KBV	C.CAPACITOR CH 50V 0.01U	2	

Ref.No.	Part No.	Part Name & Description	Pcs	Remarks
C515,16	ECUX1H272KBV	C.CAPACITOR CH 50V 2700P	2	
C517	ECUX1H153KBV	C.CAPACITOR CH 50V 0.015U	1	
C518	ECUX1H272KBV	C.CAPACITOR CH 50V 2700P	1	
C519	ECUX1H153KBV	C.CAPACITOR CH 50V 0.015U	1	
C520	ECUX1C104KBV	C.CAPACITOR CH 16V 0.1U	1	
C522,23	ECUX1H103KBV	C.CAPACITOR CH 50V 0.01U	2	
C524,25	ECUX1H153KBV	C.CAPACITOR CH 50V 0.015U	2	
C526	ECUX1H103KBV	C.CAPACITOR CH 50V 0.01U	1	
C527	ECUX1C104KBV	C.CAPACITOR CH 16V 0.1U	1	
C600	ECUX1H103KBV	C.CAPACITOR CH 50V 0.01U	1	
C601	EEVHB1C470	E.CAPACITOR 16V 47U	1	
C602,03	ECUX1H103KBV	C.CAPACITOR CH 50V 0.01U	2	
C604	EEVHB1C470	E.CAPACITOR 16V 47U	1	
C605	ECUX1H103KBV	C.CAPACITOR CH 50V 0.01U	1	
C606	EEVHB1E330P	E.CAPACITOR 25V 33U	1	
C607-09	ECUX1H103KBV	C.CAPACITOR CH 50V 0.01U	3	
C611	EEVHB1A330	E.CAPACITOR 10V 33U	1	
C612-14	ECUX1H103KBV	C.CAPACITOR CH 50V 0.01U	3	
C616	EEVHB1A330	E.CAPACITOR 10V 33U	1	
C617	ECUX1H103KBV	C.CAPACITOR CH 50V 0.01U	1	
C618	EEVHB1A330	E.CAPACITOR 10V 33U	1	
C619	EEVHB1E330P	E.CAPACITOR 25V 33U	1	
C620	ECUX1H103KBV	C.CAPACITOR CH 50V 0.01U	1	
C621,22	EEVHB1H1R0	E.CAPACITOR 50V 1U	2	
C624	EEVHB1A330	E.CAPACITOR 10V 33U	1	
C625	ECUX1H103KBV	C.CAPACITOR CH 50V 0.01U	1	
C626	EEVHB1H1R0	E.CAPACITOR 50V 1U	1	
C627	ECUX1H103KBV	C.CAPACITOR CH 50V 0.01U	1	
C628	EEVHB1H1R0	E.CAPACITOR 50V 1U	1	
C629-32	ECA1CHG332	C.CAPACITOR 16V 3300U	4	
C633	ECUX1C104KBV	C.CAPACITOR CH 16V 0.1U	1	
C634	ECUX1H103KBV	C.CAPACITOR CH 50V 0.01U	1	
C650	ECUX1H102KBV	C.CAPACITOR CH 50V 1000P	1	F1H1H102A009
C651	EEUFC1V101	E.CAPACITOR 35V 100U	1	
C652-54	EEVHB1H4R7	E.CAPACITOR 50V 4.7U	3	
C655	ECUX1H681KBV	C.CAPACITOR CH 50V 680P	1	
C656,57	ECUX1C274KBN	C.CAPACITOR CH 16V 0.27U	2	
C658,59	ECUX1H103KBV	C.CAPACITOR CH 50V 0.01U	2	
C660	ECUX1H472KBV	C.CAPACITOR CH 50V 4700P	1	
C661	ECUX1H332KBV	C.CAPACITOR CH 50V 3300P	1	
C662	ECUX1C333KBV	C.CAPACITOR CH 16V 0.033U	1	
C663,64	ECUX1H103KBV	C.CAPACITOR CH 50V 0.01U	2	
C665	ECUX1C274KBN	C.CAPACITOR CH 16V 0.27U	1	
C666	ECUX1C104KBV	C.CAPACITOR CH 16V 0.1U	1	
C667	EEVHB1H1R0	E.CAPACITOR 50V 1U	1	
C668	ECUX1H103KBV	C.CAPACITOR CH 50V 0.01U	1	
C669	ECUX1C104KBV	C.CAPACITOR CH 16V 0.1U	1	
C670-72	ECUX1C333KBV	C.CAPACITOR CH 16V 0.033U	3	
C673	EEVHB1A330	E.CAPACITOR 10V 33U	1	
C674,75	ECUX1H103KBV	C.CAPACITOR CH 50V 0.01U	2	
C750	ECUX1H102KBV	C.CAPACITOR CH 50V 1000P	1	F1H1H102A009
C751	EEUFC1V101	E.CAPACITOR 35V 100U	1	
C752-54	EEVHB1H4R7	E.CAPACITOR 50V 4.7U	3	
C755	ECUX1H681KBV	C.CAPACITOR CH 50V 680P	1	
C756,57	ECUX1C274KBN	C.CAPACITOR CH 16V 0.27U	2	
C758,59	ECUX1H103KBV	C.CAPACITOR CH 50V 0.01U	2	
C760	ECUX1H472KBV	C.CAPACITOR CH 50V 4700P	1	
C761	ECUX1H332KBV	C.CAPACITOR CH 50V 3300P	1	
C762	ECUX1C333KBV	C.CAPACITOR CH 16V 0.033U	1	
C763,64	ECUX1H103KBV	C.CAPACITOR CH 50V 0.01U	2	
C765	ECUX1C274KBN	C.CAPACITOR CH 16V 0.27U	1	
C766	ECUX1C104KBV	C.CAPACITOR CH 16V 0.1U	1	
C767	EEVHB1H1R0	E.CAPACITOR 50V 1U	1	
C768	ECUX1H103KBV	C.CAPACITOR CH 50V 0.01U	1	
C769	ECUX1C104KBV	C.CAPACITOR CH 16V 0.1U	1	
C770-72	ECUX1C333KBV	C.CAPACITOR CH 16V 0.033U	3	
C773	EEVHB1A330	E.CAPACITOR 10V 33U	1	
C850	ECUX1H103KBV	C.CAPACITOR CH 50V 0.01U	1	
C851	EEUFC1V101	E.CAPACITOR 35V 100U	1	
C852	ECUX1H103KBV	C.CAPACITOR CH 50V 0.01U	1	
C853	EEUFC1V221	E.CAPACITOR 35V 220U	1	
C854	ECUX1H103KBV	C.CAPACITOR CH 50V 0.01U	1	
C855	EEUFC1V101	E.CAPACITOR 35V 100U	1	
C856	ECUX1H103KBV	C.CAPACITOR CH 50V 0.01U	1	
C857	EEUFC1V221	E.CAPACITOR 35V 220U	1	

Ref.No.	Part No.	Part Name & Description	Pcs	Remarks
C858	ECUX1H102KBV	C.CAPACITOR CH 50V 1000P	1	F1H1H102A009
C859	EEUFC1V101	E.CAPACITOR 35V 100U	1	
C860	ECUX1H103KBV	C.CAPACITOR CH 50V 0.01U	1	
C861	EEUFC1C271	E.CAPACITOR 16V 270U	1	
C862	ECUX1H103KBV	C.CAPACITOR CH 50V 0.01U	1	
C863	EEUFC1C271	E.CAPACITOR 16V 270U	1	
C864	ECUX1H682KBV	C.CAPACITOR CH 50V 6800P	1	
C865	EEUFC1C271	E.CAPACITOR 16V 270U	1	
C866	ECUX1H103KBV	C.CAPACITOR CH 50V 0.01U	1	
C900	EEVHB1A330	E.CAPACITOR 10V 33U	1	
C901	ECUX1H103KBV	C.CAPACITOR CH 50V 0.01U	1	
C902	ECUX1C104KBV	C.CAPACITOR CH 16V 0.1U	1	
C903-06	ECUX1H103KBV	C.CAPACITOR CH 50V 0.01U	4	
C907	ECUX1C104KBV	C.CAPACITOR CH 16V 0.1U	1	
C908	ECUX1C333KBV	C.CAPACITOR CH 16V 0.033U	1	
C909-11	ECUX1C104KBV	C.CAPACITOR CH 16V 0.1U	3	
C912	EEVHB1A330	E.CAPACITOR 10V 33U	1	
C913	ECUX1H103KBV	C.CAPACITOR CH 50V 0.01U	1	
C914	ECUX1C104KBV	C.CAPACITOR CH 16V 0.1U	1	
C915-18	ECUX1H103KBV	C.CAPACITOR CH 50V 0.01U	4	
C919	ECUX1C104KBV	C.CAPACITOR CH 16V 0.1U	1	
C920	ECUX1H333KBN	C.CAPACITOR CH 50V 0.033U	1	
C921-23	ECUX1C104KBV	C.CAPACITOR CH 16V 0.1U	3	
C1001,02	ECUM1H104KBN	C.CAPACITOR CH 50V 0.1U	2	
C1003,04	ECUX1H103KBV	C.CAPACITOR CH 50V 0.01U	2	
D1,D2	MA147	DIODE	2	
D3,D4	MA8075-H	DIODE	2	
D5,D6	MA142K	DIODE	2	
D7	MA147	DIODE	1	
D8,D9	MA8075-H	DIODE	2	
D100-03	MA147	DIODE	4	
D150-53	MA147	DIODE	4	
D200-03	MA147	DIODE	4	
D400-03	MA147	DIODE	4	
D500-02	LN1251CAL	DIODE	3	
D503	MA142K	DIODE	1	
D504,05	MA147	DIODE	2	
D507	MA147	DIODE	1	
D508-11	MA142K	DIODE	4	
D513	MA147	DIODE	1	
D514	MA142K	DIODE	1	
D600-06	MA704A	DIODE	7	
D608	MA704A	DIODE	1	
D609,10	MA152WK	DIODE	2	
D611	DE5SC4M-4061	DIODE	1	
D612	MA704A	DIODE	1	
D650	SFPB-76V	DIODE	1	
D651	MA142K	DIODE	1	
D652	MA142WK	DIODE	1	
D653-58	SFPB-76V	DIODE	6	
D659-64	MA142K	DIODE	6	
D750	SFPB-76V	DIODE	1	
D751	MA142K	DIODE	1	
D752	MA142WK	DIODE	1	
D753-58	SFPB-76V	DIODE	6	
D759-64	MA142K	DIODE	6	
D850	SFPB-76V	DIODE	1	
D851	MA728	DIODE	1	
D852	MA736	DIODE	1	
D900-11	MA738	DIODE	12	
D1001,02	MA147	DIODE	2	
FL600,01	VLF0576	FILTER	2	J0HACH000011
FL603-06	VLF0576	FILTER	4	J0HACH000011
IC1	NVHC14FT	IC	1	
IC2	NJM082BM	IC	1	C0ABEB000017
IC3	TC4052BFN	IC	1	
IC4,C5	NJM082BM	IC	2	C0ABEB000017
IC6	AD633JR	IC	1	C0ZBZ0000158
IC7	NJM082BM	IC	1	C0ABEB000017
IC100,01	UPC4741G2	IC	2	
IC102	NJM2901M	IC	1	C0BBCA000008
IC103	NVHC14FT	IC	1	

Ref.No.	Part No.	Part Name & Description	Pcs	Remarks
IC150,51	UPC4741G2	IC	2	
IC152	NJM2901M	IC	1	C0BBCA000008
IC200,01	UPC4741G2	IC	2	
IC250	NJM4580ED	IC	1	C0ABBB000123
IC251	NJM2903M	IC	1	
IC252	NJM4580ED	IC	1	C0ABBB000123
IC253	NVHC14FT	IC	1	
IC254	MC14538BF	IC	1	C0JBAM000009
IC255	UPC4741G2	IC	1	
IC301	T74LCX244F	IC	1	
IC302	TL7705CPSB	IC	1	
IC303,04	S80829ANUP	IC	2	
IC305	NVHC08FT	IC	1	
IC306	T74VHCU04F	IC	1	
IC307-10	T74LCX244F	IC	4	
IC400	TC4052BFN	IC	1	
IC401	UPC4741G2	IC	1	
IC451	TVHT244F	IC	1	
IC500	IDT71321L55F	IC	1	C3HBCC000002
IC501	T74LCX245F	IC	1	
IC502,03	TVHT244F	IC	2	
IC504	T74LCX245F	IC	1	
IC505	NVHC32F	IC	1	
IC506,07	SN74S1051NS	IC	2	
IC508,09	UPC4741G2	IC	2	
IC511	UPC4741G2	IC	1	
IC512	LTC1660IGN	IC	1	C0FBBF000026
IC513	NJM4558M	IC	1	
IC600,01	NJM78L09UA	IC	2	C0CBAHC00002
IC603	XC62FP3302P	IC	1	
IC604	NJM78L05UA	IC	1	C0CBADC00010
IC605,06	NJM79L09UA	IC	2	C0CABBF00001
IC608	NJM79L05UA	IC	1	
IC609	AN78N05	IC	1	
IC610	XC62FP3302P	IC	1	
IC650	AN3891FBP	IC	1	
IC651,52	NJM4558M	IC	2	
IC653	NJM2903M	IC	1	
IC750	AN3891FBP	IC	1	
IC751,52	NJM4558M	IC	2	
IC850	NJM2903M	IC	1	
IC900,01	AN3890FBS	IC	2	
IC1001	TC4052BFN	IC	1	
ID0	VVVSI3293	IC	1	
ID300	VVVSI3309F	IC	1	
IP300	MN1030F04K	IC	1	
IP450	X9144L7T100	IC	1	
L650,51	VLQ0859M151	COIL 150UH	2	
L750,51	VLQ0859M151	COIL 150UH	2	
L850,51	VLQ0859M680	COIL 68UH	2	
L852,53	VLQ0859M151	COIL 150UH	2	
L854	VLQ0651M120	COIL 12UH	1	
L855	VLQ0859M151	COIL 150UH	1	
P001,02	VJP3454B096	CONNECTOR (MALE)	2	K1KA96B00021
P302	VJS3791B020	CONNECTOR (FEMALE)	1	
P450	VJP3125B008	CONNECTOR (MALE)	1	
Q1	2SD601A	TRANSISTOR	1	
Q2,Q3	2SB709A	TRANSISTOR	2	
Q4	2SD601A	TRANSISTOR	1	
Q5	2SB709A	TRANSISTOR	1	
Q6	2SD601A	TRANSISTOR	1	
Q600-03	2SD601A	TRANSISTOR	4	
Q650	2SB934	TRANSISTOR	1	
Q651	2SB710A-S	TRANSISTOR	1	
Q652-54	2SD2185	TRANSISTOR	3	
Q655	PU3210	TRANSISTOR	1	PUA3210
Q656	PU3117	TRANSISTOR	1	
Q657	2SD2185	TRANSISTOR	1	
Q658	2SD601A	TRANSISTOR	1	
Q750	2SB934	TRANSISTOR	1	

Ref.No.	Part No.	Part Name & Description	Pcs	Remarks
Q751	2SB710A-S	TRANSISTOR	1	
Q752-54	2SD2185	TRANSISTOR	3	
Q755	PU3210	TRANSISTOR	1	PUA3210
Q756	PU3117	TRANSISTOR	1	
Q757	2SD2185	TRANSISTOR	1	
Q850	2SB934	TRANSISTOR	1	
Q851,52	2SD1819A-R	TRANSISTOR	2	
Q853	2SB1073	TRANSISTOR	1	
Q900	PU3210	TRANSISTOR	1	PUA3210
Q901	PU3110	TRANSISTOR	1	PUA3110
Q902	PU3210	TRANSISTOR	1	PUA3210
Q903	PU3110	TRANSISTOR	1	PUA3110
QR1	UN5213	TRANSISTOR-RESISTOR	1	
QR2	UN5113	TRANSISTOR-RESISTOR	1	
QR3	UN5215	TRANSISTOR-RESISTOR	1	
QR4	UN5115	TRANSISTOR-RESISTOR	1	
QR5,R6	UN5213	TRANSISTOR-RESISTOR	2	
QR100	UN5213	TRANSISTOR-RESISTOR	1	
QR101	UN5113	TRANSISTOR-RESISTOR	1	
QR102	UN5213	TRANSISTOR-RESISTOR	1	
QR103	UN5113	TRANSISTOR-RESISTOR	1	
QR104	UN5213	TRANSISTOR-RESISTOR	1	
QR150	UN5213	TRANSISTOR-RESISTOR	1	
QR151	UN5113	TRANSISTOR-RESISTOR	1	
QR152	UN5213	TRANSISTOR-RESISTOR	1	
QR153	UN5113	TRANSISTOR-RESISTOR	1	
QR154	UN5213	TRANSISTOR-RESISTOR	1	
QR200	UN5213	TRANSISTOR-RESISTOR	1	
QR201	UN5113	TRANSISTOR-RESISTOR	1	
QR202	UN5213	TRANSISTOR-RESISTOR	1	
QR203	UN5113	TRANSISTOR-RESISTOR	1	
QR204	UN5213	TRANSISTOR-RESISTOR	1	
QR400,01	UN5215	TRANSISTOR-RESISTOR	2	
QR500-02	UN5213	TRANSISTOR-RESISTOR	3	
QR650,51	UN5215	TRANSISTOR-RESISTOR	2	
QR750,51	UN5215	TRANSISTOR-RESISTOR	2	
QR850	UN5213	TRANSISTOR-RESISTOR	1	
QR900	UN5213	TRANSISTOR-RESISTOR	1	
QR901	UN5217	TRANSISTOR-RESISTOR	1	
QR902	UN5211	TRANSISTOR-RESISTOR	1	
QR1001	UN5215	TRANSISTOR-RESISTOR	1	
R1-R4	ERJ3GEYG102	M.RESISTOR CH 1/16W 1K	4	
R5,R6	ERJ3RBD471	M.RESISTOR CH 1/16W 470	2	
R7	ERJ3GEY0R00	M.RESISTOR CH 1/16W 0	1	
R8	ERJ3GEYJ563	M.RESISTOR CH 1/16W 56K	1	
R9,10	ERJ3GEYJ104	M.RESISTOR CH 1/16W 100K	2	
R11	ERJ3GEYJ563	M.RESISTOR CH 1/16W 56K	1	
R12,13	ERJ3GEYJ103	M.RESISTOR CH 1/16W 10K	2	
R14	ERJ3GEYJ104	M.RESISTOR CH 1/16W 100K	1	
R15,16	ERJ3GEYJ473	M.RESISTOR CH 1/16W 47K	2	
R17	ERJ6GEYG272	M.RESISTOR CH 1/10W 2.7K	1	
R18	ERJ3GEYJ153	M.RESISTOR CH 1/16W 15K	1	
R19	ERJ3GEYJ823	M.RESISTOR CH 1/16W 82K	1	
R20	ERJ3GEYJ274	M.RESISTOR CH 1/16W 270K	1	
R21	ERJ3GEYJ153	M.RESISTOR CH 1/16W 15K	1	
R22	ERJ3GEYJ823	M.RESISTOR CH 1/16W 82K	1	
R23,24	ERJ3GEYJ103	M.RESISTOR CH 1/16W 10K	2	
R25	ERJ3GEYJ182	M.RESISTOR CH 1/16W 1.8K	1	
R27	ERJ3GEY0R00	M.RESISTOR CH 1/16W 0	1	
R28	ERJ3GEYJ101	M.RESISTOR CH 1/16W 100	1	
R29-31	ERJ3GEYJ103	M.RESISTOR CH 1/16W 10K	3	
R32	ERJ3GEY0R00	M.RESISTOR CH 1/16W 0	1	
R34	ERJ3GEY0R00	M.RESISTOR CH 1/16W 0	1	
R35	ERJ3RBD563	M.RESISTOR CH 1/16W 56K	1	
R36	ERJ3RBD122	M.RESISTOR CH 1/16W 1.2K	1	
R37	ERJ3GEY0R00	M.RESISTOR CH 1/16W 0	1	
R39	ERJ3RBD562	M.RESISTOR CH 1/16W 5.6K	1	
R40	ERJ3RBD471	M.RESISTOR CH 1/16W 470	1	
R41	ERJ3RBD823	M.RESISTOR CH 1/16W 82K	1	
R42	ERJ3GEYJ562	M.RESISTOR CH 1/16W 5.6K	1	
R43	ERJ3GEYG682	M.RESISTOR CH 1/16W 6.8K	1	
R44	ERJ3RBD562	M.RESISTOR CH 1/16W 5.6K	1	
R45	ERJ3RBD471	M.RESISTOR CH 1/16W 470	1	

Ref.No.	Part No.	Part Name & Description	Pcs	Remarks
R46	ERJ3RBD823	M.RESISTOR CH 1/16W 82K	1	
R47	ERJ3GEYJ562	M.RESISTOR CH 1/16W 5.6K	1	
R48	ERJ3GEYG682	M.RESISTOR CH 1/16W 6.8K	1	
R49,50	ERJ3RBD222	M.RESISTOR CH 1/16W 2.2K	2	
R51	ERJ3GEYJ222	M.RESISTOR CH 1/16W 2.2K	1	
R53	ERJ3GEYJ823	M.RESISTOR CH 1/16W 82K	1	
R54	ERJ3GEYJ183	M.RESISTOR CH 1/16W 18K	1	
R55	ERJ3GEYJ393	M.RESISTOR CH 1/16W 39K	1	
R56	ERJ3GEYJ473	M.RESISTOR CH 1/16W 47K	1	
R57	ERJ3GEY0R00	M.RESISTOR CH 1/16W 0	1	
R58	ERJ3GEYJ103	M.RESISTOR CH 1/16W 10K	1	
R59	ERJ3GEY0R00	M.RESISTOR CH 1/16W 0	1	
R60	ERJ3GEYJ222	M.RESISTOR CH 1/16W 2.2K	1	
R61	ERJ3GEYJ103	M.RESISTOR CH 1/16W 10K	1	
R100,01	ERJ3GEYJ103	M.RESISTOR CH 1/16W 10K	2	
R102,03	ERJ3RBD223	M.RESISTOR CH 1/16W 22K	2	
R104,05	ERJ3GEYJ474	M.RESISTOR CH 1/16W 470K	2	
R106-09	ERJ3GEYJ222	M.RESISTOR CH 1/16W 2.2K	4	
R110,11	ERJ3GEYJ103	M.RESISTOR CH 1/16W 10K	2	
R112,13	ERJ3RED334	M.RESISTOR CH 1/16W 330K	2	
R114	ERJ3GEYJ154	M.RESISTOR CH 1/16W 150K	1	
R115	ERJ3GEYJ562	M.RESISTOR CH 1/16W 5.6K	1	
R116	ERJ3GEYJ224	M.RESISTOR CH 1/16W 220K	1	
R117	ERJ3GEYJ562	M.RESISTOR CH 1/16W 5.6K	1	
R118	ERJ3GEYJ273	M.RESISTOR CH 1/16W 27K	1	
R119	ERJ3GEYJ183	M.RESISTOR CH 1/16W 18K	1	
R120,21	ERJ3GEYJ103	M.RESISTOR CH 1/16W 10K	2	
R122,23	ERJ3RED334	M.RESISTOR CH 1/16W 330K	2	
R124	ERJ3GEYJ154	M.RESISTOR CH 1/16W 150K	1	
R125	ERJ3GEYJ562	M.RESISTOR CH 1/16W 5.6K	1	
R126	ERJ3GEYJ224	M.RESISTOR CH 1/16W 220K	1	
R127	ERJ3GEYJ562	M.RESISTOR CH 1/16W 5.6K	1	
R128	ERJ3GEYJ273	M.RESISTOR CH 1/16W 27K	1	
R129	ERJ3GEYJ183	M.RESISTOR CH 1/16W 18K	1	
R130	ERJ3GEYJ101	M.RESISTOR CH 1/16W 100	1	
R150,51	ERJ3RBD912	M.RESISTOR CH 1/16W 9.1K	2	
R152,53	ERJ3RBD223	M.RESISTOR CH 1/16W 22K	2	
R154,55	ERJ3GEYJ474	M.RESISTOR CH 1/16W 470K	2	
R156-59	ERJ3GEYJ222	M.RESISTOR CH 1/16W 2.2K	4	
R160,61	ERJ3GEYJ103	M.RESISTOR CH 1/16W 10K	2	
R162,63	ERJ3RED334	M.RESISTOR CH 1/16W 330K	2	
R164	ERJ3GEYJ154	M.RESISTOR CH 1/16W 150K	1	
R165	ERJ3GEYJ562	M.RESISTOR CH 1/16W 5.6K	1	
R166	ERJ3GEYJ224	M.RESISTOR CH 1/16W 220K	1	
R167	ERJ3GEYJ562	M.RESISTOR CH 1/16W 5.6K	1	
R168	ERJ3GEYJ273	M.RESISTOR CH 1/16W 27K	1	
R169	ERJ3GEYJ183	M.RESISTOR CH 1/16W 18K	1	
R170,71	ERJ3GEYJ103	M.RESISTOR CH 1/16W 10K	2	
R172,73	ERJ3RED334	M.RESISTOR CH 1/16W 330K	2	
R174	ERJ3GEYJ154	M.RESISTOR CH 1/16W 150K	1	
R175	ERJ3GEYJ562	M.RESISTOR CH 1/16W 5.6K	1	
R176	ERJ3GEYJ224	M.RESISTOR CH 1/16W 220K	1	
R177	ERJ3GEYJ562	M.RESISTOR CH 1/16W 5.6K	1	
R178	ERJ3GEYJ273	M.RESISTOR CH 1/16W 27K	1	
R179	ERJ3GEYJ183	M.RESISTOR CH 1/16W 18K	1	
R180-83	ERJ3GEY0R00	M.RESISTOR CH 1/16W 0	4	
R200,01	ERJ3RBD912	M.RESISTOR CH 1/16W 9.1K	2	
R202,03	ERJ3RBD223	M.RESISTOR CH 1/16W 22K	2	
R204,05	ERJ3GEYJ474	M.RESISTOR CH 1/16W 470K	2	
R206-09	ERJ3GEYJ222	M.RESISTOR CH 1/16W 2.2K	4	
R210,11	ERJ3GEYJ103	M.RESISTOR CH 1/16W 10K	2	
R212,13	ERJ3RED334	M.RESISTOR CH 1/16W 330K	2	
R214	ERJ3GEYJ154	M.RESISTOR CH 1/16W 150K	1	
R215	ERJ3GEYJ562	M.RESISTOR CH 1/16W 5.6K	1	
R216	ERJ3GEYJ224	M.RESISTOR CH 1/16W 220K	1	
R217	ERJ3GEYJ562	M.RESISTOR CH 1/16W 5.6K	1	
R218	ERJ3GEYJ273	M.RESISTOR CH 1/16W 27K	1	
R219	ERJ3GEYJ183	M.RESISTOR CH 1/16W 18K	1	
R220,21	ERJ3GEYJ103	M.RESISTOR CH 1/16W 10K	2	
R222,23	ERJ3RED334	M.RESISTOR CH 1/16W 330K	2	
R224	ERJ3GEYJ154	M.RESISTOR CH 1/16W 150K	1	
R225	ERJ3GEYJ562	M.RESISTOR CH 1/16W 5.6K	1	
R226	ERJ3GEYJ224	M.RESISTOR CH 1/16W 220K	1	
R227	ERJ3GEYJ562	M.RESISTOR CH 1/16W 5.6K	1	
R228	ERJ3GEYJ273	M.RESISTOR CH 1/16W 27K	1	

Ref.No.	Part No.	Part Name & Description	Pcs	Remarks
R229	ERJ3GEYJ183	M.RESISTOR CH 1/16W 18K	1	
R250,51	ERJ3GEYJ274	M.RESISTOR CH 1/16W 270K	2	
R252	ERJ3GEYJ222	M.RESISTOR CH 1/16W 2.2K	1	
R253	ERJ3GEYJ154	M.RESISTOR CH 1/16W 150K	1	
R254	ERJ3GEYJ272	M.RESISTOR CH 1/16W 2.7K	1	
R255	ERJ3GEYJ274	M.RESISTOR CH 1/16W 270K	1	
R256	ERJ3GEYJ272	M.RESISTOR CH 1/16W 2.7K	1	
R257	ERJ3GEYJ123	M.RESISTOR CH 1/16W 12K	1	
R258,59	ERJ3RBD223	M.RESISTOR CH 1/16W 22K	2	
R260	ERJ3GEYJ621	M.RESISTOR CH 1/16W 620	1	
R261	ERJ3RBD223	M.RESISTOR CH 1/16W 22K	1	
R263	ERJ3GEYJ154	M.RESISTOR CH 1/16W 150K	1	
R265	ERJ3GEYG472	M.RESISTOR CH 1/16W 4.7K	1	
R266	ERJ3GEYJ274	M.RESISTOR CH 1/16W 270K	1	
R267	ERJ3GEYJ272	M.RESISTOR CH 1/16W 2.7K	1	
R268	ERJ3GEYJ123	M.RESISTOR CH 1/16W 12K	1	
R269	ERJ3GEYJ433	M.RESISTOR CH 1/16W 43K	1	
R270	ERJ3GEYJ564	M.RESISTOR CH 1/16W 560K	1	
R271-75	ERJ3RBD103	M.RESISTOR CH 1/16W 10K	5	
R276	ERJ3GEY0R00	M.RESISTOR CH 1/16W 0	1	
R278-82	ERJ3GEY0R00	M.RESISTOR CH 1/16W 0	5	
R283,84	ERJ3GEYJ153	M.RESISTOR CH 1/16W 15K	2	
R301	ERJ3GEYJ101	M.RESISTOR CH 1/16W 100	1	
R302	ERJ3GEYJ103	M.RESISTOR CH 1/16W 10K	1	
R303	ERJ3GEYG102	M.RESISTOR CH 1/16W 1K	1	
R304	ERJ3GEYJ562	M.RESISTOR CH 1/16W 5.6K	1	
R305	ERJ3GEYJ120	M.RESISTOR CH 1/16W 12	1	
R306-11	ERJ3GEYJ473	M.RESISTOR CH 1/16W 47K	6	
R312	ERJ3GEYG102	M.RESISTOR CH 1/16W 1K	1	
R313,14	ERJ3GEYJ473	M.RESISTOR CH 1/16W 47K	2	
R316	ERJ3GEYJ105	M.RESISTOR CH 1/16W 1M	1	
R317	ERJ3GEYJ271	M.RESISTOR CH 1/16W 270	1	
R318	ERJ3GEYG102	M.RESISTOR CH 1/16W 1K	1	
R319	ERJ3GEYJ470	M.RESISTOR CH 1/16W 47	1	
R320	ERJ3GEY0R00	M.RESISTOR CH 1/16W 0	1	
R322	ERJ3GEYJ473	M.RESISTOR CH 1/16W 47K	1	
R323	ERJ3GEY0R00	M.RESISTOR CH 1/16W 0	1	
R324-28	ERJ3GEYJ473	M.RESISTOR CH 1/16W 47K	5	
R329-36	ERJ3GEY0R00	M.RESISTOR CH 1/16W 0	8	
R338	ERJ3GEY0R00	M.RESISTOR CH 1/16W 0	1	
R339-42	ERJ3GEYJ473	M.RESISTOR CH 1/16W 47K	4	
R343	ERJ3GEY0R00	M.RESISTOR CH 1/16W 0	1	
R344	ERJ3GEYJ101	M.RESISTOR CH 1/16W 100	1	
R345,46	ERJ3GEY0R00	M.RESISTOR CH 1/16W 0	2	
R348	ERJ3GEYJ101	M.RESISTOR CH 1/16W 100	1	
R349,50	ERJ3GEYJ222	M.RESISTOR CH 1/16W 2.2K	2	
R351	ERJ3GEYJ470	M.RESISTOR CH 1/16W 47	1	
R353,54	ERJ3GEY0R00	M.RESISTOR CH 1/16W 0	2	
R355	ERJ3GEYJ101	M.RESISTOR CH 1/16W 100	1	
R356-65	ERJ3GEY0R00	M.RESISTOR CH 1/16W 0	10	
R366	ERJ3GEYJ473	M.RESISTOR CH 1/16W 47K	1	
R368	ERJ3GEY0R00	M.RESISTOR CH 1/16W 0	1	
R369	ERJ3GEYJ101	M.RESISTOR CH 1/16W 100	1	
R370	ERJ3GEYG102	M.RESISTOR CH 1/16W 1K	1	
R371	ERJ3GEY0R00	M.RESISTOR CH 1/16W 0	1	
R373-88	ERJ3GEYJ470	M.RESISTOR CH 1/16W 47	16	
R400-04	ERJ3GEYJ273	M.RESISTOR CH 1/16W 27K	5	
R405-09	ERJ3GEYG102	M.RESISTOR CH 1/16W 1K	5	
R410,11	ERJ3GEYJ473	M.RESISTOR CH 1/16W 47K	2	
R413,14	ERJ3GEY0R00	M.RESISTOR CH 1/16W 0	2	
R415	ERJ3GEYG472	M.RESISTOR CH 1/16W 4.7K	1	
R416	ERJ3GEYJ103	M.RESISTOR CH 1/16W 10K	1	
R417	ERJ3GEYJ222	M.RESISTOR CH 1/16W 2.2K	1	
R418	ERJ3GEYG472	M.RESISTOR CH 1/16W 4.7K	1	
R419	ERJ3GEYJ103	M.RESISTOR CH 1/16W 10K	1	
R420	ERJ3GEYJ222	M.RESISTOR CH 1/16W 2.2K	1	
R421	ERJ3GEY0R00	M.RESISTOR CH 1/16W 0	1	
R422	ERJ3GEYG102	M.RESISTOR CH 1/16W 1K	1	
R423	ERJ3GEY0R00	M.RESISTOR CH 1/16W 0	1	
R424-28	ERJ3GEYG102	M.RESISTOR CH 1/16W 1K	5	
R450-55	ERJ3GEYJ103	M.RESISTOR CH 1/16W 10K	6	
R456	ERJ3GEYJ470	M.RESISTOR CH 1/16W 47	1	
R457,58	ERJ3GEYJ101	M.RESISTOR CH 1/16W 100	2	
R459	ERJ3GEYJ103	M.RESISTOR CH 1/16W 10K	1	
R461,62	ERJ3GEYG472	M.RESISTOR CH 1/16W 4.7K	2	

Ref.No.	Part No.	Part Name & Description	Pcs	Remarks
R464-66	ERJ3GEYJ680	M.RESISTOR CH 1/16W 68	3	
R467-70	ERJ3GEY0R00	M.RESISTOR CH 1/16W 0	4	
R471	ERJ3GEYJ101	M.RESISTOR CH 1/16W 100	1	
R472	ERJ3GEYG102	M.RESISTOR CH 1/16W 1K	1	
R473	ERJ3GEYJ680	M.RESISTOR CH 1/16W 68	1	
R500	ERJ3GEYJ101	M.RESISTOR CH 1/16W 100	1	
R501-08	ERJ3GEY0R00	M.RESISTOR CH 1/16W 0	8	
R509	ERJ3GEYJ101	M.RESISTOR CH 1/16W 100	1	
R510-15	ERJ3GEYJ103	M.RESISTOR CH 1/16W 10K	6	
R516	ERJ3GEYJ101	M.RESISTOR CH 1/16W 100	1	
R517-22	ERJ3GEYJ103	M.RESISTOR CH 1/16W 10K	6	
R523	ERJ3GEYJ101	M.RESISTOR CH 1/16W 100	1	
R524	ERJ3GEYJ103	M.RESISTOR CH 1/16W 10K	1	
R525,26	ERJ3GEYG152	M.RESISTOR CH 1/16W 1.5K	2	
R527	ERJ3GEYJ103	M.RESISTOR CH 1/16W 10K	1	
R528-33	ERJ3GEY0R00	M.RESISTOR CH 1/16W 0	6	
R534-36	ERJ3GEYJ821	M.RESISTOR CH 1/16W 820	3	
R537	ERJ3GEYJ121	M.RESISTOR CH 1/16W 120	1	
R538	ERJ3GEYJ223	M.RESISTOR CH 1/16W 22K	1	
R539	ERJ3GEYJ103	M.RESISTOR CH 1/16W 10K	1	
R540,41	ERJ3GEY0R00	M.RESISTOR CH 1/16W 0	2	
R542	ERJ3GEYG102	M.RESISTOR CH 1/16W 1K	1	
R543	ERJ3RBD102	M.RESISTOR CH 1/16W 1K	1	
R544	ERJ3RBD182	M.RESISTOR CH 1/16W 1.8K	1	
R545,46	ERJ3RBD151	M.RESISTOR CH 1/16W 150	2	
R547	ERJ3RBD152	M.RESISTOR CH 1/16W 1.5K	1	
R548	ERJ3RBD272	M.RESISTOR CH 1/16W 2.7K	1	
R550	ERJ3GEYG102	M.RESISTOR CH 1/16W 1K	1	
R551	ERJ3RBD102	M.RESISTOR CH 1/16W 1K	1	
R552	ERJ3RBD182	M.RESISTOR CH 1/16W 1.8K	1	
R553-55	ERJ3GEYJ563	M.RESISTOR CH 1/16W 56K	3	
R556	ERJ3RBD104	M.RESISTOR CH 1/16W 100K	1	
R557	ERJ3RBD563	M.RESISTOR CH 1/16W 56K	1	
R558	ERJ3GEYJ103	M.RESISTOR CH 1/16W 10K	1	
R559	ERJ3GEYJ563	M.RESISTOR CH 1/16W 56K	1	
R560	ERJ3RBD104	M.RESISTOR CH 1/16W 100K	1	
R561	ERJ3RBD563	M.RESISTOR CH 1/16W 56K	1	
R562	ERJ3GEYJ103	M.RESISTOR CH 1/16W 10K	1	
R563,64	ERJ3GEYJ473	M.RESISTOR CH 1/16W 47K	2	
R565	ERJ3GEYJ104	M.RESISTOR CH 1/16W 100K	1	
R566	ERJ3GEYJ563	M.RESISTOR CH 1/16W 56K	1	
R567	ERJ3GEYJ103	M.RESISTOR CH 1/16W 10K	1	
R568,69	ERJ6RBD332	M.RESISTOR CH 1/10W 3.3K	2	
R570	ERJ6RBD104	M.RESISTOR CH 1/10W 100K	1	
R571	ERJ3RBD563	M.RESISTOR CH 1/16W 56K	1	
R572,73	ERJ3GEY0R00	M.RESISTOR CH 1/16W 0	2	
R574,75	ERJ3GEYJ103	M.RESISTOR CH 1/16W 10K	2	
R576-79	ERJ3GEY0R00	M.RESISTOR CH 1/16W 0	4	
R582	ERJ3RBD152	M.RESISTOR CH 1/16W 1.5K	1	
R583	ERJ3RBD272	M.RESISTOR CH 1/16W 2.7K	1	
R584-87	ERJ3GEY0R00	M.RESISTOR CH 1/16W 0	4	
R588,89	ERJ3GEYJ101	M.RESISTOR CH 1/16W 100	2	
R590,91	ERJ3GEYG102	M.RESISTOR CH 1/16W 1K	2	
R592,93	ERJ6RED474	M.RESISTOR CH 1/10W 470K	2	
R594,95	ERJ3GEYG102	M.RESISTOR CH 1/16W 1K	2	
R596	ERJ3GEYJ224	M.RESISTOR CH 1/16W 220K	1	
R600	ERJ3GEYJ681	M.RESISTOR CH 1/16W 680	1	
R601,02	ERJ6RBD391	M.RESISTOR CH 1/10W 390	2	
R603	ERJ3GEYJ681	M.RESISTOR CH 1/16W 680	1	
R604-07	ERJ6RBD391	M.RESISTOR CH 1/10W 390	4	
R608	ERJ3GEY0R00	M.RESISTOR CH 1/16W 0	1	
R611	ERJ3GEY0R00	M.RESISTOR CH 1/16W 0	1	
R612,13	ERJ3GEYG332	M.RESISTOR CH 1/16W 3.3K	2	
R650	ERJ3GEYJ101	M.RESISTOR CH 1/16W 100	1	
R651	ERJ12YJ471	M.RESISTOR CH 1/2W 470	1	
R652	ERJ12YJ2R2	M.RESISTOR CH 1/2W 2.2	1	
R653	ERJ6GEYG752	M.RESISTOR CH 1/10W 7.5K	1	
R654	ERJ6GEYG562	M.RESISTOR CH 1/10W 5.6K	1	
R655	ERJ3GEYJ104	M.RESISTOR CH 1/16W 100K	1	
R656	ERJ3GEYJ681	M.RESISTOR CH 1/16W 680	1	
R657-59	ERJ3GEYJ223	M.RESISTOR CH 1/16W 22K	3	
R660-62	ERJ14YJ680	M.RESISTOR CH 1/4W 68	3	
R663	ERJ3GEYJ562	M.RESISTOR CH 1/16W 5.6K	1	
R664	ERJ12RQJR22	M.RESISTOR CH 1/2W 0.22	1	
R665	ERJ3GEYJ473	M.RESISTOR CH 1/16W 47K	1	

Ref.No.	Part No.	Part Name & Description	Pcs	Remarks
R666-68	ERJ3GEYJ103	M.RESISTOR CH 1/16W 10K	3	
R669	ERG2SJ471	M.RESISTOR 2W 470	1	
R670	ERJ12YJ560	M.RESISTOR CH 1/2W 56	1	
R671	ERJ3GEYJ123	M.RESISTOR CH 1/16W 12K	1	
R672-75	ERJ3RBD103	M.RESISTOR CH 1/16W 10K	4	
R676	ERJ3RBD183	M.RESISTOR CH 1/16W 18K	1	
R677	ERJ3GEYJ222	M.RESISTOR CH 1/16W 2.2K	1	
R678	ERJ3RBD332	M.RESISTOR CH 1/16W 3.3K	1	
R679	ERJ3RBD183	M.RESISTOR CH 1/16W 18K	1	
R680	ERJ3RBD473	M.RESISTOR CH 1/16W 47K	1	
R681	ERJ3RBD562	M.RESISTOR CH 1/16W 5.6K	1	
R682	ERJ3RBD332	M.RESISTOR CH 1/16W 3.3K	1	
R683	ERJ3GEYG682	M.RESISTOR CH 1/16W 6.8K	1	
R684	ERJ3RED334	M.RESISTOR CH 1/16W 330K	1	
R685	ERJ3GEYJ222	M.RESISTOR CH 1/16W 2.2K	1	
R686	ERJ6GEYG103	M.RESISTOR CH 1/10W 10K	1	
R687	ERJ3GEYJ273	M.RESISTOR CH 1/16W 27K	1	
R688	ERJ6GEYG121	M.RESISTOR CH 1/10W 120	1	
R689	ERJ3RBD152	M.RESISTOR CH 1/16W 1.5K	1	
R690	ERJ3GEYJ180	M.RESISTOR CH 1/16W 18	1	
R691	ERJ3RBD333	M.RESISTOR CH 1/16W 33K	1	
R692,93	ERJ3GEYJ331	M.RESISTOR CH 1/16W 330	2	
R694	ERJ3GEYJ151	M.RESISTOR CH 1/16W 150	1	
R695	ERJ3GEYJ681	M.RESISTOR CH 1/16W 680	1	
R696	ERJ12YJ121	M.RESISTOR CH 1/2W 120	1	
R697	ERJ3GEYJ103	M.RESISTOR CH 1/16W 10K	1	
R698,99	ERJ3GEYJ562	M.RESISTOR CH 1/16W 5.6K	2	
R700	ERJ3RBD473	M.RESISTOR CH 1/16W 47K	1	
R701	ERJ3RBD152	M.RESISTOR CH 1/16W 1.5K	1	
R702	ERJ3GEYJ103	M.RESISTOR CH 1/16W 10K	1	
R703	ERJ3GEYG472	M.RESISTOR CH 1/16W 4.7K	1	
R704	ERJ3GEYJ683	M.RESISTOR CH 1/16W 68K	1	
R705	ERJ3GEYG102	M.RESISTOR CH 1/16W 1K	1	
R706	ERJ3GEY0R00	M.RESISTOR CH 1/16W 0	1	
R750	ERJ3GEYJ101	M.RESISTOR CH 1/16W 100	1	
R751	ERJ12YJ471	M.RESISTOR CH 1/2W 470	1	
R752	ERJ12YJ2R2	M.RESISTOR CH 1/2W 2.2	1	
R753	ERJ6GEYG752	M.RESISTOR CH 1/10W 7.5K	1	
R754	ERJ6GEYG562	M.RESISTOR CH 1/10W 5.6K	1	
R755	ERJ3GEYJ104	M.RESISTOR CH 1/16W 100K	1	
R756	ERJ3GEYJ681	M.RESISTOR CH 1/16W 680	1	
R757-59	ERJ3GEYJ223	M.RESISTOR CH 1/16W 22K	3	
R760-62	ERJ14YJ680	M.RESISTOR CH 1/4W 68	3	
R763	ERJ3GEYJ562	M.RESISTOR CH 1/16W 5.6K	1	
R764	ERJ12RQJR22	M.RESISTOR CH 1/2W 0.22	1	
R765	ERJ3GEYJ473	M.RESISTOR CH 1/16W 47K	1	
R766-68	ERJ3GEYJ103	M.RESISTOR CH 1/16W 10K	3	
R769	ERG2SJ471	M.RESISTOR 2W 470	1	
R770	ERJ12YJ560	M.RESISTOR CH 1/2W 56	1	
R771	ERJ3GEYJ123	M.RESISTOR CH 1/16W 12K	1	
R772-75	ERJ3RBD103	M.RESISTOR CH 1/16W 10K	4	
R776	ERJ3RBD183	M.RESISTOR CH 1/16W 18K	1	
R777	ERJ3GEYJ222	M.RESISTOR CH 1/16W 2.2K	1	
R778	ERJ3RBD332	M.RESISTOR CH 1/16W 3.3K	1	
R779	ERJ3RBD183	M.RESISTOR CH 1/16W 18K	1	
R780	ERJ3RBD473	M.RESISTOR CH 1/16W 47K	1	
R781	ERJ3RBD562	M.RESISTOR CH 1/16W 5.6K	1	
R782	ERJ3RBD332	M.RESISTOR CH 1/16W 3.3K	1	
R783	ERJ3GEYG682	M.RESISTOR CH 1/16W 6.8K	1	
R784	ERJ3RED334	M.RESISTOR CH 1/16W 330K	1	
R785	ERJ3GEYJ222	M.RESISTOR CH 1/16W 2.2K	1	
R786	ERJ6GEYG103	M.RESISTOR CH 1/10W 10K	1	
R787	ERJ3GEYJ273	M.RESISTOR CH 1/16W 27K	1	
R788	ERJ6GEYG121	M.RESISTOR CH 1/10W 120	1	
R789	ERJ3RBD152	M.RESISTOR CH 1/16W 1.5K	1	
R790	ERJ3GEYJ180	M.RESISTOR CH 1/16W 18	1	
R791	ERJ3RBD333	M.RESISTOR CH 1/16W 33K	1	
R792,93	ERJ3GEYJ331	M.RESISTOR CH 1/16W 330	2	
R794	ERJ3GEYJ151	M.RESISTOR CH 1/16W 150	1	
R795	ERJ3GEYJ681	M.RESISTOR CH 1/16W 680	1	
R796	ERJ12YJ121	M.RESISTOR CH 1/2W 120	1	
R797	ERJ3GEYJ103	M.RESISTOR CH 1/16W 10K	1	
R798	ERJ3GEY0R00	M.RESISTOR CH 1/16W 0	1	
R851	ERJ6GEY0R00	M.RESISTOR CH 1/10W 0	1	
R852	ERJ3GEYJ101	M.RESISTOR CH 1/16W 100	1	

Ref.No.	Part No.	Part Name & Description	Pcs	Remarks
R853	ERJ12YJ471	M.RESISTOR CH 1/2W 470	1	
R854	ERJ12YJ2R2	M.RESISTOR CH 1/2W 2.2	1	
R855	ERJ3RBD123	M.RESISTOR CH 1/16W 12K	1	
R856	ERJ3RBD512	M.RESISTOR CH 1/16W 5.1K	1	
R857,58	ERJ3GEYG102	M.RESISTOR CH 1/16W 1K	2	
R859	ERJ3GEYJ394	M.RESISTOR CH 1/16W 390K	1	
R861	ERJ3GEYJ103	M.RESISTOR CH 1/16W 10K	1	
R862	ERJ3GEYJ821	M.RESISTOR CH 1/16W 820	1	
R863	ERJ3GEYJ222	M.RESISTOR CH 1/16W 2.2K	1	
R864	ERJ3GEYG102	M.RESISTOR CH 1/16W 1K	1	
R865	ERJ3GEYG332	M.RESISTOR CH 1/16W 3.3K	1	
R866	ERJ12YJ102	M.RESISTOR CH 1/2W 1K	1	
R867	ERJ3GEYG102	M.RESISTOR CH 1/16W 1K	1	
R868,69	ERJ6GEYG471	M.RESISTOR CH 1/10W 470	2	
R870,71	ERJ3GEY0R00	M.RESISTOR CH 1/16W 0	2	
R872	ERJ12YJ102	M.RESISTOR CH 1/2W 1K	1	
R873	ERJ3GEYG102	M.RESISTOR CH 1/16W 1K	1	
R900	ERJ3GEYG471	M.RESISTOR CH 1/16W 470	1	
R901	ERJ3RBD333	M.RESISTOR CH 1/16W 33K	1	
R902	ERJ3RBD222	M.RESISTOR CH 1/16W 2.2K	1	
R903	ERJ3GEY0R00	M.RESISTOR CH 1/16W 0	1	
R904	ERJ3GEYG471	M.RESISTOR CH 1/16W 470	1	
R905,06	ERJ3GEYJ223	M.RESISTOR CH 1/16W 22K	2	
R907-09	ERJ8GEYJ1R0	M.RESISTOR CH 1/8W 1	3	
R910	ERJ3GEYG471	M.RESISTOR CH 1/16W 470	1	
R911	ERJ3RBD333	M.RESISTOR CH 1/16W 33K	1	
R912	ERJ3RBD222	M.RESISTOR CH 1/16W 2.2K	1	
R913	ERJ3GEY0R00	M.RESISTOR CH 1/16W 0	1	
R914	ERJ3GEYG471	M.RESISTOR CH 1/16W 470	1	
R915-17	ERJ8GEYJ1R0	M.RESISTOR CH 1/8W 1	3	
R918	ERJ3GEYG332	M.RESISTOR CH 1/16W 3.3K	1	
R950,51	ERJ3GEYJ470	M.RESISTOR CH 1/16W 47	2	
R952-54	ERJ3GEY0R00	M.RESISTOR CH 1/16W 0	3	
R955-59	ERJ3GEYJ470	M.RESISTOR CH 1/16W 47	5	
R960-63	ERJ3GEY0R00	M.RESISTOR CH 1/16W 0	4	
R964-68	ERJ3GEYJ470	M.RESISTOR CH 1/16W 47	5	
R969-72	ERJ3GEY0R00	M.RESISTOR CH 1/16W 0	4	
R973,74	ERJ3GEYJ470	M.RESISTOR CH 1/16W 47	2	
R975	ERJ3GEY0R00	M.RESISTOR CH 1/16W 0	1	
R976,77	ERJ3GEYJ470	M.RESISTOR CH 1/16W 47	2	
R1001-04	ERJ3GEYJ224	M.RESISTOR CH 1/16W 220K	4	
R1005	ERJ3GEYJ153	M.RESISTOR CH 1/16W 15K	1	
RY600	VSY2070	RELAY	1	
TG1,G2	VJR0646	TEST POINT	2	D0X0R0000022
TG3	EYF6CU	TEST POINT	1	
TG4	VJR0646	TEST POINT	1	D0X0R0000022
TG5	EYF6CU	TEST POINT	1	
TP1	VJR0646	TEST POINT	1	D0X0R0000022
TP30,31	VJR0646	TEST POINT	2	D0X0R0000022
TP34,35	VJR0646	TEST POINT	2	D0X0R0000022
TP60	EYF6CU	TEST POINT	1	
TP80-83	VJR0646	TEST POINT	4	D0X0R0000022
TP120-23	VJR0646	TEST POINT	4	D0X0R0000022
TP160-63	VJR0646	TEST POINT	4	D0X0R0000022
TP200,01	VJR0646	TEST POINT	2	D0X0R0000022
TP230,31	VJR0646	TEST POINT	2	D0X0R0000022
TP252,53	EYF6CU	TEST POINT	2	
TP280-82	VJR0646	TEST POINT	3	D0X0R0000022
TP300,01	VJR0646	TEST POINT	2	D0X0R0000022
TP302-05	EYF6CU	TEST POINT	4	
TP307	EYF6CU	TEST POINT	1	
TP320	VJR0646	TEST POINT	1	D0X0R0000022
TP400,01	VJR0646	TEST POINT	2	D0X0R0000022
TP450,51	VJR0646	TEST POINT	2	D0X0R0000022
TP455	EYF6CU	TEST POINT	1	
TP500	VJR0646	TEST POINT	1	D0X0R0000022
TP501-03	EYF6CU	TEST POINT	3	
TP701,02	EYF6CU	TEST POINT	2	
TP722-26	VJR0646	TEST POINT	5	D0X0R0000022
TP732	VJR0646	TEST POINT	1	D0X0R0000022
TP734	VJR0646	TEST POINT	1	D0X0R0000022

Ref.No.	Part No.	Part Name & Description	Pcs	Remarks
X300	VSX0918	CRYSTAL OSCILLATOR	1	H0J250500005
		MISCELLANEOUS		
	VML2143	CARD PULLER	1	
	VML2144	CARD PULLER	1	
■ E2	VEP86294C	F2 SYSCON P.C.BOARD	1	(RTL)
C3,C4	EEVHB1C470	E.CAPACITOR 16V 47U	2	
C5	ECUX1E104ZFV	C.CAPACITOR CH 25V 0.1U	1	
C6,C7	EEVHB1C470	E.CAPACITOR 16V 47U	2	
C8,C9	ECUX1E104ZFV	C.CAPACITOR CH 25V 0.1U	2	
C10	EEVHB0J330	E.CAPACITOR 6.3V 33U	1	
C11,12	EEVHB0J470	E.CAPACITOR 6.3V 47U	2	
C13	ECUX1E104ZFV	C.CAPACITOR CH 25V 0.1U	1	
C107	ECUX1C104KBV	C.CAPACITOR CH 16V 0.1U	1	
C108,09	ECUX1E104ZFV	C.CAPACITOR CH 25V 0.1U	2	
C110	ECQB1H104JF	P.CAPACITOR 50V 0.1U	1	
C111	EEVHP1E4R7	E.CAPACITOR 25V 4.7U	1	
C112	ECUX1E104ZFV	C.CAPACITOR CH 25V 0.1U	1	
C113,14	ECUX1H150JCV	C.CAPACITOR CH 50V 15P	2	
C115,16	ECUX1E104ZFV	C.CAPACITOR CH 25V 0.1U	2	
C117-29	ECUX1H103KBV	C.CAPACITOR CH 50V 0.01U	13	
C134	ECUX1H103KBV	C.CAPACITOR CH 50V 0.01U	1	
C200	ECUX1E104ZFV	C.CAPACITOR CH 25V 0.1U	1	
C201-03	EEVHB1C470	E.CAPACITOR 16V 47U	3	
C204,05	ECUX1E104ZFV	C.CAPACITOR CH 25V 0.1U	2	
C206	ECUX1H103KBV	C.CAPACITOR CH 50V 0.01U	1	
C300-05	ECUX1H103KBV	C.CAPACITOR CH 50V 0.01U	6	
C401	ECUM1C105ZFN	C.CAPACITOR CH 16V 1U	1	
C402	ECUX1E104ZFV	C.CAPACITOR CH 25V 0.1U	1	
C404	ECUM1C105ZFN	C.CAPACITOR CH 16V 1U	1	
C405	ECUX1E104ZFV	C.CAPACITOR CH 25V 0.1U	1	
C406	ECUX1H103KBV	C.CAPACITOR CH 50V 0.01U	1	
C408	ECUM1C105ZFN	C.CAPACITOR CH 16V 1U	1	
C410	ECUM1C105ZFN	C.CAPACITOR CH 16V 1U	1	
C411	ECUX1H103KBV	C.CAPACITOR CH 50V 0.01U	1	
C412	ECUM1C105ZFN	C.CAPACITOR CH 16V 1U	1	
C413-15	ECUX1H103KBV	C.CAPACITOR CH 50V 0.01U	3	
C416	ECUX1E104ZFV	C.CAPACITOR CH 25V 0.1U	1	
C421,22	ECUX1H103KBV	C.CAPACITOR CH 50V 0.01U	2	
C427,28	ECUX1E104ZFV	C.CAPACITOR CH 25V 0.1U	2	
C429	EEVHB1C470	E.CAPACITOR 16V 47U	1	
C433	ECUX1E104ZFV	C.CAPACITOR CH 25V 0.1U	1	
C435	EEVHB1C470	E.CAPACITOR 16V 47U	1	
C500,01	ECA1CHG682	E.CAPACITOR 16V 6800U	2	
C502	ECUX1E104ZFV	C.CAPACITOR CH 25V 0.1U	1	
C503	ECUX1C104KBV	C.CAPACITOR CH 16V 0.1U	1	
C504	ECUX1C106KBP	C.CAPACITOR CH 16V 10U	1	
C505,06	ECUX1C104KBV	C.CAPACITOR CH 16V 0.1U	2	
C507-09	ECUX1H103KBV	C.CAPACITOR CH 50V 0.01U	3	
C510,11	EEVHB1C100	E.CAPACITOR 16V 10U	2	
C512	ECUX1H221JCV	C.CAPACITOR CH 50V 220P	1	
C513	ECUX1E104ZFV	C.CAPACITOR CH 25V 0.1U	1	
C514	EEVHB1C470	E.CAPACITOR 16V 47U	1	
C515	ECUX1C104KBV	C.CAPACITOR CH 16V 0.1U	1	
C516	ECUX1H103KBV	C.CAPACITOR CH 50V 0.01U	1	
C517	EEVHB1C100	E.CAPACITOR 16V 10U	1	
C518	ECUX1H103KBV	C.CAPACITOR CH 50V 0.01U	1	
C600	ECUX1E104ZFV	C.CAPACITOR CH 25V 0.1U	1	
C601,02	ECUX1H103KBV	C.CAPACITOR CH 50V 0.01U	2	
C603,04	ECUX1H180JCV	C.CAPACITOR CH 50V 18P	2	
C605-07	ECUX1E104ZFV	C.CAPACITOR CH 25V 0.1U	3	
C608-16	ECUX1H103KBV	C.CAPACITOR CH 50V 0.01U	9	
C700	ECUX1H103KBV	C.CAPACITOR CH 50V 0.01U	1	
C701-05	ECUX1E104ZFV	C.CAPACITOR CH 25V 0.1U	5	
C708-12	ECUX1H103KBV	C.CAPACITOR CH 50V 0.01U	5	
C713	ECUX1C473KBV	C.CAPACITOR CH 16V 0.047U	1	
C714-16	ECUM1C334KBN	C.CAPACITOR CH 16V 0.33U	3	

Ref.No.	Part No.	Part Name & Description	Pcs	Remarks
C800,01	ECUX1H331JCV	C.CAPACITOR CH 50V 330P	2	
C802	ECUX1E104ZFV	C.CAPACITOR CH 25V 0.1U	1	
C803	ECUX1H103KBV	C.CAPACITOR CH 50V 0.01U	1	
C804,05	ECUX1H102JCV	C.CAPACITOR CH 50V 1000P	2	
C806	EEVHB1C100	E.CAPACITOR 16V 10U	1	
C807-18	ECUX1H103KBV	C.CAPACITOR CH 50V 0.01U	12	
C900,01	ECUX1E104ZFV	C.CAPACITOR CH 25V 0.1U	2	
C902	ECUX1H103KBV	C.CAPACITOR CH 50V 0.01U	1	
C903	ECUX1E104ZFV	C.CAPACITOR CH 25V 0.1U	1	
C904-11	ECUX1H103KBV	C.CAPACITOR CH 50V 0.01U	8	
C1000-02	ECUX1E104ZFV	C.CAPACITOR CH 25V 0.1U	3	
C1003,04	ECUX1H150JCV	C.CAPACITOR CH 50V 15P	2	
C1005	ECUX1C104KBV	C.CAPACITOR CH 16V 0.1U	1	
C1006	ECUX1H221JCV	C.CAPACITOR CH 50V 220P	1	
C1007-09	ECUX1H103KBV	C.CAPACITOR CH 50V 0.01U	3	
C1010-15	ECUX1E104ZFV	C.CAPACITOR CH 25V 0.1U	6	
C1016-23	ECUX1H103KBV	C.CAPACITOR CH 50V 0.01U	8	
C1027-32	ECUX1H103KBV	C.CAPACITOR CH 50V 0.01U	6	
C1034,35	ECUX1H103KBV	C.CAPACITOR CH 50V 0.01U	2	
C1130-35	ECUX1H103KBV	C.CAPACITOR CH 50V 0.01U	6	
C1200,01	ECUX1H103KBV	C.CAPACITOR CH 50V 0.01U	2	
C1300,01	ECUX1E104ZFV	C.CAPACITOR CH 25V 0.1U	2	
C1302,03	ECUX1H050CCV	C.CAPACITOR CH 50V 5P	2	
C1304,05	ECUX1E104ZFV	C.CAPACITOR CH 25V 0.1U	2	
C1306	EEVHB0J470	E.CAPACITOR 6.3V 47U	1	
C1307	ECUX1H102JCV	C.CAPACITOR CH 50V 1000P	1	
C1308	ECUX1H682KBV	C.CAPACITOR CH 50V 6800P	1	
C1309	EEVHP1E4R7	E.CAPACITOR 25V 4.7U	1	
C1310,11	ECUX1H103KBV	C.CAPACITOR CH 50V 0.01U	2	
C1312-14	EEVHP1E4R7	E.CAPACITOR 25V 4.7U	3	
C1315	ECUX1H103KBV	C.CAPACITOR CH 50V 0.01U	1	
C1316	ECUX1E104ZFV	C.CAPACITOR CH 25V 0.1U	1	
C1317	EEVHB1C100	E.CAPACITOR 16V 10U	1	
C1318,19	ECUX1E104ZFV	C.CAPACITOR CH 25V 0.1U	2	
C1320	EEVHP1E4R7	E.CAPACITOR 25V 4.7U	1	
C1321	EEVHB1C100	E.CAPACITOR 16V 10U	1	
C1322	ECUX1H120JCV	C.CAPACITOR CH 50V 12P	1	
C1323	ECUX1H561JCV	C.CAPACITOR CH 50V 560P	1	
C1324	ECUX1H821JCV	C.CAPACITOR CH 50V 820P	1	
C1325	ECUX1H103KBV	C.CAPACITOR CH 50V 0.01U	1	
C1326	EEVHP1E4R7	E.CAPACITOR 25V 4.7U	1	
C1327	EEVHP1A330	E.CAPACITOR 10V 33U	1	
C1328,29	ECUX1H103KBV	C.CAPACITOR CH 50V 0.01U	2	
C1330	EEVHP1A330	E.CAPACITOR 10V 33U	1	
C1335	ECUX1E104ZFV	C.CAPACITOR CH 25V 0.1U	1	
C1336,37	ECUX1H103KBV	C.CAPACITOR CH 50V 0.01U	2	
C1338-41	EEVHB1C470	E.CAPACITOR 16V 47U	4	
C1342,43	ECUX1E104ZFV	C.CAPACITOR CH 25V 0.1U	2	
C1344,45	ECUX1H103KBV	C.CAPACITOR CH 50V 0.01U	2	
C1348,49	ECUX1E104ZFV	C.CAPACITOR CH 25V 0.1U	2	
C1400	ECUX1E104ZFV	C.CAPACITOR CH 25V 0.1U	1	
C1401-05	ECUX1H103KBV	C.CAPACITOR CH 50V 0.01U	5	
C1406-09	ECUX1E104ZFV	C.CAPACITOR CH 25V 0.1U	4	
C1410-12	ECUX1H103KBV	C.CAPACITOR CH 50V 0.01U	3	
C1413	ECUX1E104ZFV	C.CAPACITOR CH 25V 0.1U	1	
C1414-18	ECUX1H103KBV	C.CAPACITOR CH 50V 0.01U	5	
C1501-09	ECUX1H103KBV	C.CAPACITOR CH 50V 0.01U	9	
C1601-07	ECUX1H103KBV	C.CAPACITOR CH 50V 0.01U	7	
D1,D2	MA701A	DIODE	2	
D100	MA147	DIODE	1	
D101-04	MA715	DIODE	4	
D405	MA142WK	DIODE	1	
D406	MA3051-H	DIODE	1	
D407	MA3043-M	DIODE	1	
D408	MA3075-M	DIODE	1	
D409-12	LN1251CAL	DIODE	4	
D500	MA3051-H	DIODE	1	
D501	21DQ04	DIODE	1	B0JAME000021
D502,03	MA142WK	DIODE	2	
D504	MA147	DIODE	1	
D505-11	MA142WK	DIODE	7	
D512	MA3030-H	DIODE	1	
D513-17	MA738	DIODE	5	
D518	NSQ03A04	DIODE	1	B0JCPE000013

Ref.No.	Part No.	Part Name & Description	Pcs	Remarks
D519-22	MA738	DIODE	4	
D523	NSQ03A04	DIODE	1	B0JCPE000013
D524-27	MA738	DIODE	4	
D528	NSQ03A04	DIODE	1	B0JCPE000013
D529-32	MA738	DIODE	4	
D533	NSQ03A04	DIODE	1	B0JCPE000013
D534	MA142WK	DIODE	1	
D541-43	MA738	DIODE	3	
D800,01	MA142WK	DIODE	2	
D804	MA142WK	DIODE	1	
D900,01	MA715	DIODE	2	
D902	MA142WK	DIODE	1	
D903	MA715	DIODE	1	
D1000-08	MA715	DIODE	9	
D1009-11	LN1251CAL	DIODE	3	
D1300-03	MA147	DIODE	4	
FL5	VLF0576	FILTER	1	J0HACH000011
FL1300,01	VLF0576	FILTER	2	J0HACH000011
IC1	M37702S4AFP	IC	1	C2CBYF000003
IC2	VSI3513	IC	1	
IC3	74F573SJ	IC	1	
IC4	74F138SJ	IC	1	
IC5	74F573SJ	IC	1	
IC6	TL7705CPSB	IC	1	
IC7	TCVHC132F	IC	1	
IC8	TVHC04FT	IC	1	
IC9,10	74AC32SJ	IC	2	
IC11,12	74F32SJ	IC	2	
IC13	TVHC74FT	IC	1	
IC14	74F11SJ	IC	1	C0JBCA000024
IC15	IDT71321L55F	IC	1	C3HBCC000002
IC16	74F245SJ	IC	1	C0JBCZ000183
IC17	STK14C88N45	IC	1	C3ZAD0000015
IC19,20	74F245SJ	IC	2	C0JBCZ000183
IC21,22	SN74S1051NS	IC	2	
IC23	74F245SJ	IC	1	C0JBCZ000183
IC24	TVHT244F	IC	1	
IC25	TC7S14F	IC	1	
IC26	TE7751	IC	1	C1ZBZ0000156
IC27,28	M54649L	IC	2	C0GAH0000001
IC29	NJM2901M	IC	1	C0BBCA000008
IC30	NJM2904M	IC	1	
IC31,32	MC14538BF	IC	2	C0JBAM000009
IC33	74F32SJ	IC	1	
IC34	74F00SJ	IC	1	C0JBCC000037
IC35	NJM2901M	IC	1	C0BBCA000008
IC36,37	TC7S14F	IC	2	
IC38	MC14538BF	IC	1	C0JBAM000009
IC39	NJM2904M	IC	1	
IC40	MC14013BF	IC	1	C0JBAF000325
IC41	MC14538BF	IC	1	C0JBAM000009
IC42	TC7S08F	IC	1	C0JBAA000095
IC50	XC62FP3302P	IC	1	
IC500	KL5C80A12CFP	IC	1	
IC501	TVHC74FT	IC	1	
IC502	74F32SJ	IC	1	
IC503	VSI3514	IC	1	
IC504	CY7C19920ZC	IC	1	
IC505	IDT71321L55F	IC	1	C3HBCC000002
IC506	TVHC138FT	IC	1	
IC507	T74HC191AF	IC	1	
IC508	TVHC00FT	IC	1	
IC509	SN75C1168NS	IC	1	
IC510	Z84C4310FEC	IC	1	C2ZBZ0000312
IC511,12	TVHC126FT	IC	2	
IC513,14	SN75C1168NS	IC	2	
IC515	MAX3223CAP	IC	1	C0ZBZ0000220
IC517	MC14024BF	IC	1	C0JBAK000166
IC518	TE7751	IC	1	C1ZBZ0000156
IC519,20	TCVHC165F	IC	2	
IC521,22	TC74HC4094AF	IC	2	
IC523	TVHC04FT	IC	1	
IC524	MC74HC4050F	IC	1	C0JBAB000048

Ref.No.	Part No.	Part Name & Description	Pcs	Remarks
IC525	SN74LS38NS	IC	1	
IC527	TE7751	IC	1	C1ZBZ0000156
IC528,29	TCVHC165F	IC	2	
IC530,31	T74HC191AF	IC	2	
IC532	TVHC574FT	IC	1	
IC534,35	TCVHC165F	IC	2	
IC536	TVHT541FT	IC	1	
IC537	TVHC08FT	IC	1	
IC538	TVHT245F	IC	1	
IC540	TVHT245F	IC	1	
IC542	TVHC04FT	IC	1	
IC545	TVHT244F	IC	1	
IC546	74F08SJ	IC	1	
IC547	74F32SJ	IC	1	
IC548	74F08SJ	IC	1	
IC549	74F32SJ	IC	1	
IC554	TC7S08F	IC	1	C0JBAA000095
IC1002	TVHT08FT	IC	1	
IC1003	TC7SH04FU	IC	1	
IC1004	C0JBAA000099	IC	1	
IC1005,06	CY7C19920ZC	IC	2	
IC1007	MN51040VPI	IC	1	
IC1008	TVHC574FT	IC	1	
IC1009	TVHC32FT	IC	1	
IC1010	UPC4741G2	IC	1	
IC1011	THC4053FT	IC	1	
IC1012	UPC319G2	IC	1	C0BBBB000009
IC1013	NJM2068MD	IC	1	
IC1014	NJM4560MD	IC	1	C0ABBB000116
IC1017	NJM78L09UA	IC	1	C0CBAHC00002
IC1018	NJM79L09UA	IC	1	C0CABBF00001
IC1019-21	NJM084M	IC	3	C0ABFB000008
IC1022	74F541SJ	IC	1	C0JBCZ000190
IC1023	SN74S1051NS	IC	1	
IC1024	74F541SJ	IC	1	C0JBCZ000190
IC1025	SN74S1051NS	IC	1	
IC1026	74F245SJ	IC	1	C0JBCZ000183
IC1027	74F32SJ	IC	1	
IC1028	74F08SJ	IC	1	
IC1029	74F245SJ	IC	1	C0JBCZ000183
IC1030,31	TVHT541FT	IC	2	
IC1032	74F541SJ	IC	1	C0JBCZ000190
IC1033	SN74S1051NS	IC	1	
IC1034	74F541SJ	IC	1	C0JBCZ000190
IC1035	TVHC541FT	IC	1	
IC1036	TVHT541FT	IC	1	
IC1037	TVHC126FT	IC	1	
IC1038	TC7SH04FU	IC	1	
IC1039	TVHC541FT	IC	1	
ID0	VVVSI3294A	IC	1	
ID1000	VVVSI3310D	IC	1	
IP1000	M32160F4UFP	IC	1	
IP1037	X9036L7V64	IC	1	
IP1100	X9144L7T144	IC	1	
IS2	VJS2336A032	CONNECTOR (FEMALE)	1	K3E032C00033
IS503	VJS2336A032	CONNECTOR (FEMALE)	1	K3E032C00033
L1-L5	VLP0133	COIL	5	
L400	VLQ0319K470	COIL 47UH	1	G1C470K00013
L700-03	VLQ0576	COIL	4	
L1000,01	VLQ0163J470	COIL 47UH	2	
P1,P2	VJP3510	CONNECTOR (MALE)	2	K1KAC8B00004
P1000	VJS3791B020	CONNECTOR (FEMALE)	1	
P1600	VJP3125B008	CONNECTOR (MALE)	1	
P5001,02	VJS3984E080	CONNECTOR (FEMALE)	2	K1KB80A00056
P5003	VJP3440A020	CONNECTOR (MALE)	1	K1KA20A00187
P5004	VJP3418A032	CONNECTOR (MALE)	1	K1KA32A00027
P5005	VJP1232T	CONNECTOR (MALE) 5P	1	
P5006	VJP1236T	CONNECTOR (MALE) 9P	1	K1KA09A00023
P5007	VJP1233T	CONNECTOR (MALE) 6P	1	
P5008	VJP1234T	CONNECTOR (MALE) 7P	1	K1KA07A00020

Ref.No.	Part No.	Part Name & Description	Pcs	Remarks
Q400	2SB710A-R	TRANSISTOR	1	
Q500	2SD601A-R	TRANSISTOR	1	
Q501	2SB936A-Q	TRANSISTOR	1	
Q502	2SD601A-R	TRANSISTOR	1	
Q503	2SB936A-Q	TRANSISTOR	1	
Q504	2SD601A-R	TRANSISTOR	1	
Q505,06	2SB1073-R	TRANSISTOR	2	
Q507	2SD601A-R	TRANSISTOR	1	
Q508	2SB709A-R	TRANSISTOR	1	
Q509,10	2SD1119-R	TRANSISTOR	2	
Q511	2SB709A-R	TRANSISTOR	1	
Q512	2SD601A-R	TRANSISTOR	1	
Q513,14	2SB1073-R	TRANSISTOR	2	
Q515	2SD601A-R	TRANSISTOR	1	
Q516	2SB709A-R	TRANSISTOR	1	
Q517,18	2SD1119-R	TRANSISTOR	2	
Q519	2SB709A-R	TRANSISTOR	1	
Q520	2SD601A-R	TRANSISTOR	1	
Q521,22	2SB1175-Q	TRANSISTOR	2	
Q523	2SD601A-R	TRANSISTOR	1	
Q524	2SB709A-R	TRANSISTOR	1	
Q525,26	2SD1747-QY	TRANSISTOR	2	
Q527	2SB709A-R	TRANSISTOR	1	
Q528	2SD601A-R	TRANSISTOR	1	
Q529,30	2SB1073-R	TRANSISTOR	2	
Q531	2SD601A-R	TRANSISTOR	1	
Q532	2SB709A-R	TRANSISTOR	1	
Q533,34	2SD1119-R	TRANSISTOR	2	
Q535	2SB709A-R	TRANSISTOR	1	
Q545,46	2SB766-R	TRANSISTOR	2	
Q1300,01	2SB709A-R	TRANSISTOR	2	
QR405-08	UN5213	TRANSISTOR-RESISTOR	4	
QR409-13	UN5214	TRANSISTOR-RESISTOR	5	
QR417	UN5214	TRANSISTOR-RESISTOR	1	
QR500	UN5213	TRANSISTOR-RESISTOR	1	
QR501-12	UN5214	TRANSISTOR-RESISTOR	12	
QR513	UN5213	TRANSISTOR-RESISTOR	1	
QR514,15	UN5214	TRANSISTOR-RESISTOR	2	
QR516	UN5213	TRANSISTOR-RESISTOR	1	
QR517-24	UN5113	TRANSISTOR-RESISTOR	8	
QR525	UN5214	TRANSISTOR-RESISTOR	1	
QR526	UN5113	TRANSISTOR-RESISTOR	1	
QR527-29	UN5214	TRANSISTOR-RESISTOR	3	
QR534	UN5113	TRANSISTOR-RESISTOR	1	
QR535	UN5214	TRANSISTOR-RESISTOR	1	
QR1000-02	UN5214	TRANSISTOR-RESISTOR	3	
R1-R4	ERJ6GEY0R00	M.RESISTOR CH 1/10W 0	4	
R100-04	ERJ3GEYJ473	M.RESISTOR CH 1/16W 47K	5	
R105-09	ERJ3GEYJ103	M.RESISTOR CH 1/16W 10K	5	
R112,13	ERJ3GEYJ103	M.RESISTOR CH 1/16W 10K	2	
R114	ERJ3GEYJ473	M.RESISTOR CH 1/16W 47K	1	
R115	ERJ3GEYJ394	M.RESISTOR CH 1/16W 390K	1	
R116,17	ERJ3GEYJ473	M.RESISTOR CH 1/16W 47K	2	
R118	ERJ3GEYJ103	M.RESISTOR CH 1/16W 10K	1	
R119	ERJ3GEYG102	M.RESISTOR CH 1/16W 1K	1	
R120,21	ERJ3GEYJ473	M.RESISTOR CH 1/16W 47K	2	
R122	ERJ3GEYG102	M.RESISTOR CH 1/16W 1K	1	
R123,24	ERJ3GEYJ103	M.RESISTOR CH 1/16W 10K	2	
R125-27	ERJ6GEY0R00	M.RESISTOR CH 1/10W 0	3	
R128-31	ERJ3GEYJ473	M.RESISTOR CH 1/16W 47K	4	
R132	ERJ3GEYJ222	M.RESISTOR CH 1/16W 2.2K	1	
R133	ERJ3GEYJ473	M.RESISTOR CH 1/16W 47K	1	
R134	ERJ3GEYJ103	M.RESISTOR CH 1/16W 10K	1	
R135	ERJ3GEYJ473	M.RESISTOR CH 1/16W 47K	1	
R136	ERJ3GEYJ103	M.RESISTOR CH 1/16W 10K	1	
R137	ERJ3GEY0R00	M.RESISTOR CH 1/16W 0	1	
R139	ERJ3GEYJ222	M.RESISTOR CH 1/16W 2.2K	1	
R140	ERJ3GEYJ473	M.RESISTOR CH 1/16W 47K	1	
R141	ERJ3GEYJ105	M.RESISTOR CH 1/16W 1M	1	
R142	ERJ3GEYG102	M.RESISTOR CH 1/16W 1K	1	
R143	ERJ3GEYG152	M.RESISTOR CH 1/16W 1.5K	1	
R144-47	ERJ3GEYJ222	M.RESISTOR CH 1/16W 2.2K	4	

Ref.No.	Part No.	Part Name & Description	Pcs	Remarks
R149,50	ERJ6GEYG271	M.RESISTOR CH 1/10W 270	2	
R151	ERJ3GEYJ473	M.RESISTOR CH 1/16W 47K	1	
R152-54	ERJ3GEY0R00	M.RESISTOR CH 1/16W 0	3	
R155	ERJ3GEYJ222	M.RESISTOR CH 1/16W 2.2K	1	
R156-58	ERJ6GEYG103	M.RESISTOR CH 1/10W 10K	3	
R159	ERJ3GEYJ473	M.RESISTOR CH 1/16W 47K	1	
R202-05	ERJ3GEY0R00	M.RESISTOR CH 1/16W 0	4	
R206	ERJ3GEYJ103	M.RESISTOR CH 1/16W 10K	1	
R250	ERJ3GEYJ103	M.RESISTOR CH 1/16W 10K	1	
R251	ERJ3GEYG102	M.RESISTOR CH 1/16W 1K	1	
R253	ERJ3GEYJ223	M.RESISTOR CH 1/16W 22K	1	
R254	ERJ8GEYJ102	M.RESISTOR CH 1/8W 1K	1	
R255,56	ERJ6GEY0R00	M.RESISTOR CH 1/10W 0	2	
R257	ERJ3GEYJ334	M.RESISTOR CH 1/16W 330K	1	
R258	ERJ3GEYJ223	M.RESISTOR CH 1/16W 22K	1	
R259	ERJ8GEYJ102	M.RESISTOR CH 1/8W 1K	1	
R300	ERJ6GEYG271	M.RESISTOR CH 1/10W 270	1	
R301-08	ERJ3GEYJ470	M.RESISTOR CH 1/16W 47	8	
R309	ERJ6GEYG271	M.RESISTOR CH 1/10W 270	1	
R310-18	ERJ3GEYJ470	M.RESISTOR CH 1/16W 47	9	
R319	ERJ3GEYJ222	M.RESISTOR CH 1/16W 2.2K	1	
R320	ERJ3GEYJ103	M.RESISTOR CH 1/16W 10K	1	
R321	ERJ3GEYG102	M.RESISTOR CH 1/16W 1K	1	
R322-29	ERJ3GEYJ470	M.RESISTOR CH 1/16W 47	8	
R330-37	ERJ3GEYG472	M.RESISTOR CH 1/16W 4.7K	8	
R338	ERJ3GEYJ473	M.RESISTOR CH 1/16W 47K	1	
R339	ERJ3GEYJ271	M.RESISTOR CH 1/16W 270	1	
R340-46	ERJ3GEYJ473	M.RESISTOR CH 1/16W 47K	7	
R347-53	ERJ3GEYJ271	M.RESISTOR CH 1/16W 270	7	
R354	ERJ6GEYG271	M.RESISTOR CH 1/10W 270	1	
R400	ERJ3GEYJ473	M.RESISTOR CH 1/16W 47K	1	
R401	ERJ3GEYJ103	M.RESISTOR CH 1/16W 10K	1	
R402,03	ERJ3GEYG472	M.RESISTOR CH 1/16W 4.7K	2	
R404	ERJ3GEYJ473	M.RESISTOR CH 1/16W 47K	1	
R405	ERJ3GEYJ105	M.RESISTOR CH 1/16W 1M	1	
R406,07	ERJ3GEYJ473	M.RESISTOR CH 1/16W 47K	2	
R408	ERJ3GEYJ103	M.RESISTOR CH 1/16W 10K	1	
R409,10	ERJ3GEYG472	M.RESISTOR CH 1/16W 4.7K	2	
R411	ERJ3GEYJ473	M.RESISTOR CH 1/16W 47K	1	
R412	ERJ3GEYJ105	M.RESISTOR CH 1/16W 1M	1	
R413-15	ERJ3GEYJ473	M.RESISTOR CH 1/16W 47K	3	
R416	ERJ3GEYJ105	M.RESISTOR CH 1/16W 1M	1	
R417,18	ERJ3GEYJ473	M.RESISTOR CH 1/16W 47K	2	
R419	ERJ3GEYJ103	M.RESISTOR CH 1/16W 10K	1	
R420,21	ERJ3GEYG472	M.RESISTOR CH 1/16W 4.7K	2	
R422	ERJ3GEYJ473	M.RESISTOR CH 1/16W 47K	1	
R423	ERJ3GEYJ105	M.RESISTOR CH 1/16W 1M	1	
R424,25	ERJ3GEYJ473	M.RESISTOR CH 1/16W 47K	2	
R426	ERJ3GEYJ103	M.RESISTOR CH 1/16W 10K	1	
R427,28	ERJ3GEYG472	M.RESISTOR CH 1/16W 4.7K	2	
R429	ERJ3GEYJ473	M.RESISTOR CH 1/16W 47K	1	
R430	ERJ3GEYJ105	M.RESISTOR CH 1/16W 1M	1	
R431-33	ERJ3GEYJ473	M.RESISTOR CH 1/16W 47K	3	
R434,35	ERJ3GEYG472	M.RESISTOR CH 1/16W 4.7K	2	
R436	ERJ3GEYJ105	M.RESISTOR CH 1/16W 1M	1	
R437-39	ERJ3GEYJ473	M.RESISTOR CH 1/16W 47K	3	
R440	ERJ3GEYJ105	M.RESISTOR CH 1/16W 1M	1	
R441-43	ERJ3GEYJ473	M.RESISTOR CH 1/16W 47K	3	
R444	ERJ3GEYJ105	M.RESISTOR CH 1/16W 1M	1	
R445,46	ERJ3GEYJ473	M.RESISTOR CH 1/16W 47K	2	
R447	ERJ3GEY0R00	M.RESISTOR CH 1/16W 0	1	
R448-53	ERJ3GEYJ103	M.RESISTOR CH 1/16W 10K	6	
R454-58	ERJ3GEYJ473	M.RESISTOR CH 1/16W 47K	5	
R459	ERJ3GEYJ104	M.RESISTOR CH 1/16W 100K	1	
R462,63	ERJ3GEY0R00	M.RESISTOR CH 1/16W 0	2	
R464-68	ERJ3GEYJ473	M.RESISTOR CH 1/16W 47K	5	
R472	ERJ6GEY0R00	M.RESISTOR CH 1/10W 0	1	
R473	ERX1SJ1R0	M.RESISTOR 1W 1.0	1	
R474	ERJ3GEYJ562	M.RESISTOR CH 1/16W 5.6K	1	
R475	ERJ6GEYG222	M.RESISTOR CH 1/10W 2.2K	1	
R476	ERJ6GEYG271	M.RESISTOR CH 1/10W 270	1	
R478-81	ERJ3GEYJ222	M.RESISTOR CH 1/16W 2.2K	4	
R484	ERG1SJ220	M.RESISTOR 1W 22	1	
R485	ERJ6GEYG222	M.RESISTOR CH 1/10W 2.2K	1	
R486	ERJ3GEYJ103	M.RESISTOR CH 1/16W 10K	1	

Ref.No.	Part No.	Part Name & Description	Pcs	Remarks
R487,88	ERJ8GEYJ151	M.RESISTOR CH 1/8W 150	2	
R491	ERJ3GEY0R00	M.RESISTOR CH 1/16W 0	1	
R500,01	ERJ3GEYJ563	M.RESISTOR CH 1/16W 56K	2	
R502	ERJ6GEYG152	M.RESISTOR CH 1/10W 1.5K	1	
R503	ERJ3GEYJ103	M.RESISTOR CH 1/16W 10K	1	
R504-06	ERJ8GEYJ681	M.RESISTOR CH 1/8W 680	3	
R507,08	ERJ3GEYJ563	M.RESISTOR CH 1/16W 56K	2	
R509	ERJ3GEYJ394	M.RESISTOR CH 1/16W 390K	1	
R510	ERJ3GEYJ104	M.RESISTOR CH 1/16W 100K	1	
R511,12	ERJ3GEYJ394	M.RESISTOR CH 1/16W 390K	2	
R513-20	ERJ3GEYJ103	M.RESISTOR CH 1/16W 10K	8	
R521	ERJ3GEYJ563	M.RESISTOR CH 1/16W 56K	1	
R522	ERJ3GEYJ683	M.RESISTOR CH 1/16W 68K	1	
R523	ERJ3GEYJ473	M.RESISTOR CH 1/16W 47K	1	
R524-26	ERJ3GEYJ563	M.RESISTOR CH 1/16W 56K	3	
R528	ERJ6GEYG152	M.RESISTOR CH 1/10W 1.5K	1	
R529	ERJ3GEYJ103	M.RESISTOR CH 1/16W 10K	1	
R530-32	ERJ8GEYJ681	M.RESISTOR CH 1/8W 680	3	
R533	ERJ3GEYG472	M.RESISTOR CH 1/16W 4.7K	1	
R534	ERJ3GEYJ103	M.RESISTOR CH 1/16W 10K	1	
R535,36	ERJ8GEYJ391	M.RESISTOR CH 1/8W 390	2	
R537	ERJ3GEYG332	M.RESISTOR CH 1/16W 3.3K	1	
R538	ERJ8GEYJ391	M.RESISTOR CH 1/8W 390	1	
R539	ERJ3GEYG332	M.RESISTOR CH 1/16W 3.3K	1	
R540-42	ERJ8GEYJ391	M.RESISTOR CH 1/8W 390	3	
R543	ERJ3GEYG472	M.RESISTOR CH 1/16W 4.7K	1	
R544,45	ERJ3GEYJ103	M.RESISTOR CH 1/16W 10K	2	
R546	ERJ3GEYG472	M.RESISTOR CH 1/16W 4.7K	1	
R547-49	ERJ8GEYJ391	M.RESISTOR CH 1/8W 390	3	
R550	ERJ3GEYG332	M.RESISTOR CH 1/16W 3.3K	1	
R551	ERJ8GEYJ391	M.RESISTOR CH 1/8W 390	1	
R552	ERJ3GEYG332	M.RESISTOR CH 1/16W 3.3K	1	
R553,54	ERJ8GEYJ391	M.RESISTOR CH 1/8W 390	2	
R555	ERJ3GEYJ103	M.RESISTOR CH 1/16W 10K	1	
R556	ERJ3GEYG472	M.RESISTOR CH 1/16W 4.7K	1	
R557	ERG1SJ100	M.RESISTOR 1W 10	1	
R558	ERJ3GEYG472	M.RESISTOR CH 1/16W 4.7K	1	
R559	ERJ3GEYJ103	M.RESISTOR CH 1/16W 10K	1	
R560,61	ERJ8GEYJ391	M.RESISTOR CH 1/8W 390	2	
R562	ERJ3GEYG332	M.RESISTOR CH 1/16W 3.3K	1	
R563	ERJ8GEYJ391	M.RESISTOR CH 1/8W 390	1	
R564	ERJ3GEYG332	M.RESISTOR CH 1/16W 3.3K	1	
R565-67	ERJ8GEYJ391	M.RESISTOR CH 1/8W 390	3	
R568	ERJ3GEYG472	M.RESISTOR CH 1/16W 4.7K	1	
R569,70	ERJ3GEYJ103	M.RESISTOR CH 1/16W 10K	2	
R571	ERJ3GEYG472	M.RESISTOR CH 1/16W 4.7K	1	
R572-74	ERJ8GEYJ391	M.RESISTOR CH 1/8W 390	3	
R575	ERJ3GEYG332	M.RESISTOR CH 1/16W 3.3K	1	
R576	ERJ8GEYJ391	M.RESISTOR CH 1/8W 390	1	
R577	ERJ3GEYG332	M.RESISTOR CH 1/16W 3.3K	1	
R578,79	ERJ8GEYJ391	M.RESISTOR CH 1/8W 390	2	
R580	ERJ3GEYJ103	M.RESISTOR CH 1/16W 10K	1	
R581	ERJ3GEYG472	M.RESISTOR CH 1/16W 4.7K	1	
R582	ERG1SJ100	M.RESISTOR 1W 10	1	
R583	ERJ3GEYG472	M.RESISTOR CH 1/16W 4.7K	1	
R584	ERJ3GEYJ103	M.RESISTOR CH 1/16W 10K	1	
R585	ERJ8GEYJ391	M.RESISTOR CH 1/8W 390	1	
R586	ERJ3GEYG332	M.RESISTOR CH 1/16W 3.3K	1	
R587	ERJ8GEYJ391	M.RESISTOR CH 1/8W 390	1	
R588	ERJ3GEYG332	M.RESISTOR CH 1/16W 3.3K	1	
R589,90	ERJ8GEYJ391	M.RESISTOR CH 1/8W 390	2	
R591	ERJ3GEYG472	M.RESISTOR CH 1/16W 4.7K	1	
R592,93	ERJ3GEYJ103	M.RESISTOR CH 1/16W 10K	2	
R594	ERJ3GEYG472	M.RESISTOR CH 1/16W 4.7K	1	
R595,96	ERJ8GEYJ391	M.RESISTOR CH 1/8W 390	2	
R597	ERJ3GEYG332	M.RESISTOR CH 1/16W 3.3K	1	
R598	ERJ8GEYJ391	M.RESISTOR CH 1/8W 390	1	
R599	ERJ3GEYG332	M.RESISTOR CH 1/16W 3.3K	1	
R600	ERJ8GEYJ391	M.RESISTOR CH 1/8W 390	1	
R601	ERJ3GEYJ103	M.RESISTOR CH 1/16W 10K	1	
R602	ERJ3GEYG472	M.RESISTOR CH 1/16W 4.7K	1	
R603	ERX1SJ6R2	M.RESISTOR 1W 6.2	1	
R604	ERJ3GEYG472	M.RESISTOR CH 1/16W 4.7K	1	
R605	ERJ3GEYJ103	M.RESISTOR CH 1/16W 10K	1	
R606,07	ERJ8GEYJ391	M.RESISTOR CH 1/8W 390	2	

Ref.No.	Part No.	Part Name & Description	Pcs	Remarks
R608	ERJ3GEYG332	M.RESISTOR CH 1/16W 3.3K	1	
R609	ERJ8GEYJ391	M.RESISTOR CH 1/8W 390	1	
R610	ERJ3GEYG332	M.RESISTOR CH 1/16W 3.3K	1	
R611-13	ERJ8GEYJ391	M.RESISTOR CH 1/8W 390	3	
R614	ERJ3GEYG472	M.RESISTOR CH 1/16W 4.7K	1	
R615,16	ERJ3GEYJ103	M.RESISTOR CH 1/16W 10K	2	
R617	ERJ3GEYG472	M.RESISTOR CH 1/16W 4.7K	1	
R618-20	ERJ8GEYJ391	M.RESISTOR CH 1/8W 390	3	
R621	ERJ3GEYG332	M.RESISTOR CH 1/16W 3.3K	1	
R622	ERJ8GEYJ391	M.RESISTOR CH 1/8W 390	1	
R623	ERJ3GEYG332	M.RESISTOR CH 1/16W 3.3K	1	
R624,25	ERJ8GEYJ391	M.RESISTOR CH 1/8W 390	2	
R626	ERJ3GEYJ103	M.RESISTOR CH 1/16W 10K	1	
R627	ERJ3GEYG472	M.RESISTOR CH 1/16W 4.7K	1	
R628	ERG1SJ100	M.RESISTOR 1W 10	1	
R629	ERJ3GEYJ104	M.RESISTOR CH 1/16W 100K	1	
R630	ERJ3GEYJ105	M.RESISTOR CH 1/16W 1M	1	
R631	ERJ3GEYJ331	M.RESISTOR CH 1/16W 330	1	
R635-50	ERJ3GEYG472	M.RESISTOR CH 1/16W 4.7K	16	
R652-55	ERJ3GEY0R00	M.RESISTOR CH 1/16W 0	4	
R656,57	ERJ3GEYG102	M.RESISTOR CH 1/16W 1K	2	
R658	ERJ3GEY0R00	M.RESISTOR CH 1/16W 0	1	
R659-66	ERJ3GEYG472	M.RESISTOR CH 1/16W 4.7K	8	
R667-70	ERJ3GEY0R00	M.RESISTOR CH 1/16W 0	4	
R672	ERJ3GEYG102	M.RESISTOR CH 1/16W 1K	1	
R673	ERJ3GEYJ103	M.RESISTOR CH 1/16W 10K	1	
R674	ERJ3GEYJ473	M.RESISTOR CH 1/16W 47K	1	
R700	ERJ3GEYJ473	M.RESISTOR CH 1/16W 47K	1	
R701	ERJ3GEYJ103	M.RESISTOR CH 1/16W 10K	1	
R702	ERJ3GEYG472	M.RESISTOR CH 1/16W 4.7K	1	
R704,05	ERJ3GEY0R00	M.RESISTOR CH 1/16W 0	2	
R708	ERJ3GEY0R00	M.RESISTOR CH 1/16W 0	1	
R710	ERJ3GEY0R00	M.RESISTOR CH 1/16W 0	1	
R713	ERJ3GEY0R00	M.RESISTOR CH 1/16W 0	1	
R715	ERJ3GEYJ103	M.RESISTOR CH 1/16W 10K	1	
R716-23	ERJ3GEYJ473	M.RESISTOR CH 1/16W 47K	8	
R724-27	ERJ3GEYG472	M.RESISTOR CH 1/16W 4.7K	4	
R732	ERJ3GEYJ103	M.RESISTOR CH 1/16W 10K	1	
R733-36	ERJ3GEYJ473	M.RESISTOR CH 1/16W 47K	4	
R737-40	ERJ3GEYG472	M.RESISTOR CH 1/16W 4.7K	4	
R745,46	ERJ3GEYJ473	M.RESISTOR CH 1/16W 47K	2	
R747,48	ERJ3GEYG472	M.RESISTOR CH 1/16W 4.7K	2	
R749	ERJ12YJ101H	M.RESISTOR CH 1/2W 100	1	
R750-53	ERJ3GEY0R00	M.RESISTOR CH 1/16W 0	4	
R754	ERJ3GEYJ473	M.RESISTOR CH 1/16W 47K	1	
R756,57	ERJ3GEYJ473	M.RESISTOR CH 1/16W 47K	2	
R759	ERJ3GEY0R00	M.RESISTOR CH 1/16W 0	1	
R760,61	ERJ3GEYJ473	M.RESISTOR CH 1/16W 47K	2	
R762	ERJ3GEY0R00	M.RESISTOR CH 1/16W 0	1	
R765	ERJ3GEY0R00	M.RESISTOR CH 1/16W 0	1	
R776,77	ERJ3GEY0R00	M.RESISTOR CH 1/16W 0	2	
R800,01	ERJ3GEYJ223	M.RESISTOR CH 1/16W 22K	2	
R802-09	ERJ3GEYG472	M.RESISTOR CH 1/16W 4.7K	8	
R811	ERJ3GEYJ101	M.RESISTOR CH 1/16W 100	1	
R812	ERJ3GEYJ394	M.RESISTOR CH 1/16W 390K	1	
R813	ERJ3GEYJ103	M.RESISTOR CH 1/16W 10K	1	
R814	ERJ3GEYJ223	M.RESISTOR CH 1/16W 22K	1	
R815	ERJ3GEYJ473	M.RESISTOR CH 1/16W 47K	1	
R816-20	ERJ3GEY0R00	M.RESISTOR CH 1/16W 0	5	
R900,01	ERJ3GEYJ473	M.RESISTOR CH 1/16W 47K	2	
R902-04	ERJ3GEYJ103	M.RESISTOR CH 1/16W 10K	3	
R905	ERJ3GEYJ222	M.RESISTOR CH 1/16W 2.2K	1	
R906-21	ERJ3GEYJ103	M.RESISTOR CH 1/16W 10K	16	
R922-29	ERJ3GEYJ473	M.RESISTOR CH 1/16W 47K	8	
R930	ERJ3GEYJ103	M.RESISTOR CH 1/16W 10K	1	
R931	ERJ3GEYJ101	M.RESISTOR CH 1/16W 100	1	
R932	ERJ3GEY0R00	M.RESISTOR CH 1/16W 0	1	
R933	ERJ3GEYJ473	M.RESISTOR CH 1/16W 47K	1	
R1000,01	ERJ3GEY0R00	M.RESISTOR CH 1/16W 0	2	
R1002-04	ERJ3GEYJ473	M.RESISTOR CH 1/16W 47K	3	
R1005-07	ERJ3GEYG102	M.RESISTOR CH 1/16W 1K	3	
R1008-11	ERJ3GEYJ103	M.RESISTOR CH 1/16W 10K	4	
R1012	ERJ3GEYJ105	M.RESISTOR CH 1/16W 1M	1	
R1013-20	ERJ3GEYG102	M.RESISTOR CH 1/16W 1K	8	
R1021	ERJ3GEY0R00	M.RESISTOR CH 1/16W 0	1	

Ref.No.	Part No.	Part Name & Description	Pcs	Remarks
R1023-34	ERJ3GEY0R00	M.RESISTOR CH 1/16W 0	12	
R1035,36	ERJ3GEYJ103	M.RESISTOR CH 1/16W 10K	2	
R1037,38	ERJ3GEY0R00	M.RESISTOR CH 1/16W 0	2	
R1041-43	ERJ3GEYJ103	M.RESISTOR CH 1/16W 10K	3	
R1044	ERJ3GEYG102	M.RESISTOR CH 1/16W 1K	1	
R1045	ERJ3GEY0R00	M.RESISTOR CH 1/16W 0	1	
R1046	ERJ3GEYJ103	M.RESISTOR CH 1/16W 10K	1	
R1047	ERJ3GEY0R00	M.RESISTOR CH 1/16W 0	1	
R1048	ERJ3GEYJ103	M.RESISTOR CH 1/16W 10K	1	
R1050	ERJ3GEYG102	M.RESISTOR CH 1/16W 1K	1	
R1051-55	ERJ3GEY0R00	M.RESISTOR CH 1/16W 0	5	
R1056-58	ERJ3GEYJ222	M.RESISTOR CH 1/16W 2.2K	3	
R1059	ERJ3GEYJ103	M.RESISTOR CH 1/16W 10K	1	
R1060-62	ERJ3GEYG102	M.RESISTOR CH 1/16W 1K	3	
R1063,64	ERJ3GEY0R00	M.RESISTOR CH 1/16W 0	2	
R1065-68	ERJ3GEYJ103	M.RESISTOR CH 1/16W 10K	4	
R1070-73	ERJ3GEYJ103	M.RESISTOR CH 1/16W 10K	4	
R1075-83	ERJ3GEY0R00	M.RESISTOR CH 1/16W 0	9	
R1084-92	ERJ3GEYJ101	M.RESISTOR CH 1/16W 100	9	
R1093-01	ERJ3GEYJ103	M.RESISTOR CH 1/16W 10K	9	
R1102-11	ERJ3GEY0R00	M.RESISTOR CH 1/16W 0	10	
R1112	ERJ3GEYJ103	M.RESISTOR CH 1/16W 10K	1	
R1113-16	ERJ3GEY0R00	M.RESISTOR CH 1/16W 0	4	
R1117,18	ERJ3GEYJ101	M.RESISTOR CH 1/16W 100	2	
R1119	ERJ3GEY0R00	M.RESISTOR CH 1/16W 0	1	
R1120,21	ERJ3GEYJ473	M.RESISTOR CH 1/16W 47K	2	
R1122	ERJ3GEYJ103	M.RESISTOR CH 1/16W 10K	1	
R1123-28	ERJ3GEY0R00	M.RESISTOR CH 1/16W 0	6	
R1129-33	ERJ3GEYJ103	M.RESISTOR CH 1/16W 10K	5	
R1137,38	ERJ3GEY0R00	M.RESISTOR CH 1/16W 0	2	
R1139	ERJ3GEYJ103	M.RESISTOR CH 1/16W 10K	1	
R1141-43	ERJ3GEY0R00	M.RESISTOR CH 1/16W 0	3	
R1144,45	ERJ3GEYJ680	M.RESISTOR CH 1/16W 68	2	
R1146,47	ERJ3GEYJ103	M.RESISTOR CH 1/16W 10K	2	
R1148,49	ERJ3GEYJ101	M.RESISTOR CH 1/16W 100	2	
R1150	ERJ3GEYJ103	M.RESISTOR CH 1/16W 10K	1	
R1151-62	ERJ3GEY0R00	M.RESISTOR CH 1/16W 0	12	
R1163-65	ERJ3GEYJ103	M.RESISTOR CH 1/16W 10K	3	
R1169	ERJ3GEYJ680	M.RESISTOR CH 1/16W 68	1	
R1170	ERJ3GEYJ103	M.RESISTOR CH 1/16W 10K	1	
R1300-07	ERJ3GEY0R00	M.RESISTOR CH 1/16W 0	8	
R1308	ERJ3GEYJ105	M.RESISTOR CH 1/16W 1M	1	
R1309-12	ERJ3GEY0R00	M.RESISTOR CH 1/16W 0	4	
R1314-16	ERJ3GEY0R00	M.RESISTOR CH 1/16W 0	3	
R1317	ERJ3GEYJ473	M.RESISTOR CH 1/16W 47K	1	
R1318	ERJ3GEYJ101	M.RESISTOR CH 1/16W 100	1	
R1319	ERJ3GEYJ103	M.RESISTOR CH 1/16W 10K	1	
R1320	ERJ3GEYJ562	M.RESISTOR CH 1/16W 5.6K	1	
R1321,22	ERJ3GEYG332	M.RESISTOR CH 1/16W 3.3K	2	
R1323	ERJ3GEYJ220	M.RESISTOR CH 1/16W 22	1	
R1324	ERJ3GEYJ222	M.RESISTOR CH 1/16W 2.2K	1	
R1325	ERJ6RBD153	M.RESISTOR CH 1/10W 15K	1	
R1326	ERJ3GEYJ473	M.RESISTOR CH 1/16W 47K	1	
R1327	ERJ6RBD102	M.RESISTOR CH 1/10W 1K	1	
R1328,29	ERJ6RBD222	M.RESISTOR CH 1/10W 2.2K	2	
R1330	ERJ3GEYJ473	M.RESISTOR CH 1/16W 47K	1	
R1331	ERJ6RBD102	M.RESISTOR CH 1/10W 1K	1	
R1332,33	ERJ6RBD222	M.RESISTOR CH 1/10W 2.2K	2	
R1334	ERJ3GEYJ473	M.RESISTOR CH 1/16W 47K	1	
R1335	ERJ3GEY0R00	M.RESISTOR CH 1/16W 0	1	
R1336	ERJ3GEYJ473	M.RESISTOR CH 1/16W 47K	1	
R1337	ERJ3GEYJ104	M.RESISTOR CH 1/16W 100K	1	
R1338	ERJ3GEYJ824	M.RESISTOR CH 1/16W 820K	1	
R1339,40	ERJ3GEYJ103	M.RESISTOR CH 1/16W 10K	2	
R1341,42	ERJ3GEYG102	M.RESISTOR CH 1/16W 1K	2	
R1343	ERJ3GEY0R00	M.RESISTOR CH 1/16W 0	1	
R1344	ERJ6RBD102	M.RESISTOR CH 1/10W 1K	1	
R1345	ERJ3GEYJ104	M.RESISTOR CH 1/16W 100K	1	
R1346,47	ERJ3GEYJ223	M.RESISTOR CH 1/16W 22K	2	
R1348	ERJ6RBD102	M.RESISTOR CH 1/10W 1K	1	
R1349	ERJ3GEYJ394	M.RESISTOR CH 1/16W 390K	1	
R1350	ERJ6RBD333	M.RESISTOR CH 1/10W 33K	1	
R1351	ERJ6RBD683	M.RESISTOR CH 1/10W 68K	1	
R1352	ERJ6RBD123	M.RESISTOR CH 1/10W 12K	1	
R1353	ERJ3GEY0R00	M.RESISTOR CH 1/16W 0	1	

Ref.No.	Part No.	Part Name & Description	Pcs	Remarks
R1354	ERJ6RBD103	M.RESISTOR CH 1/10W 10K	1	
R1355	ERJ3GEYJ103	M.RESISTOR CH 1/16W 10K	1	
R1358	ERJ3GEY0R00	M.RESISTOR CH 1/16W 0	1	
R1359	ERJ3GEYJ101	M.RESISTOR CH 1/16W 100	1	
R1360,61	ERJ6RBD332	M.RESISTOR CH 1/10W 3.3K	2	
R1362	ERJ6RBD562	M.RESISTOR CH 1/10W 5.6K	1	
R1363	ERJ6RBD682	M.RESISTOR CH 1/10W 6.8K	1	
R1364	ERJ6RED390	M.RESISTOR CH 1/10W 39	1	
R1365	ERJ3GEY0R00	M.RESISTOR CH 1/16W 0	1	
R1366,67	ERJ6RBD332	M.RESISTOR CH 1/10W 3.3K	2	
R1368	ERJ6RBD562	M.RESISTOR CH 1/10W 5.6K	1	
R1369	ERJ6RBD512	M.RESISTOR CH 1/10W 5.1K	1	
R1370	ERJ6RED390	M.RESISTOR CH 1/10W 39	1	
R1371	ERJ6RBD102	M.RESISTOR CH 1/10W 1K	1	
R1373-75	ERJ3GEYJ104	M.RESISTOR CH 1/16W 100K	3	
R1378	ERJ3GEY0R00	M.RESISTOR CH 1/16W 0	1	
R1380,81	ERJ3GEY0R00	M.RESISTOR CH 1/16W 0	2	
R1390	ERJ3GEY0R00	M.RESISTOR CH 1/16W 0	1	
R1391	ERJ3GEYJ103	M.RESISTOR CH 1/16W 10K	1	
R1392-95	ERJ3GEY0R00	M.RESISTOR CH 1/16W 0	4	
R1400	ERJ6GEYG102	M.RESISTOR CH 1/10W 1K	1	
R1401,02	ERJ3GEY0R00	M.RESISTOR CH 1/16W 0	2	
R1405	ERJ3GEYG102	M.RESISTOR CH 1/16W 1K	1	
R1407	ERJ3GEY0R00	M.RESISTOR CH 1/16W 0	1	
R1408	ERJ3GEYJ105	M.RESISTOR CH 1/16W 1M	1	
R1409,10	ERJ3GEY0R00	M.RESISTOR CH 1/16W 0	2	
R1411	ERJ3GEYJ394	M.RESISTOR CH 1/16W 390K	1	
R1412	ERJ3GEYJ823	M.RESISTOR CH 1/16W 82K	1	
R1413	ERJ3GEYJ273	M.RESISTOR CH 1/16W 27K	1	
R1414	ERJ3GEYJ394	M.RESISTOR CH 1/16W 390K	1	
R1416	ERJ3GEYG102	M.RESISTOR CH 1/16W 1K	1	
R1418	ERJ3GEY0R00	M.RESISTOR CH 1/16W 0	1	
R1419	ERJ3GEYJ105	M.RESISTOR CH 1/16W 1M	1	
R1420,21	ERJ3GEY0R00	M.RESISTOR CH 1/16W 0	2	
R1422,23	ERJ3GEYJ394	M.RESISTOR CH 1/16W 390K	2	
R1424	ERJ3GEYG102	M.RESISTOR CH 1/16W 1K	1	
R1426	ERJ3GEY0R00	M.RESISTOR CH 1/16W 0	1	
R1427	ERJ3GEYJ105	M.RESISTOR CH 1/16W 1M	1	
R1428,29	ERJ3GEY0R00	M.RESISTOR CH 1/16W 0	2	
R1430,31	ERJ3GEYJ394	M.RESISTOR CH 1/16W 390K	2	
R1432	ERJ3GEYG102	M.RESISTOR CH 1/16W 1K	1	
R1434	ERJ3GEY0R00	M.RESISTOR CH 1/16W 0	1	
R1435	ERJ3GEYJ105	M.RESISTOR CH 1/16W 1M	1	
R1436,37	ERJ3GEY0R00	M.RESISTOR CH 1/16W 0	2	
R1438,39	ERJ3GEYJ394	M.RESISTOR CH 1/16W 390K	2	
R1441	ERJ3GEYG102	M.RESISTOR CH 1/16W 1K	1	
R1443	ERJ3GEY0R00	M.RESISTOR CH 1/16W 0	1	
R1444	ERJ3GEYJ105	M.RESISTOR CH 1/16W 1M	1	
R1445,46	ERJ3GEY0R00	M.RESISTOR CH 1/16W 0	2	
R1447	ERJ3GEYJ394	M.RESISTOR CH 1/16W 390K	1	
R1448	ERJ3GEYJ823	M.RESISTOR CH 1/16W 82K	1	
R1449	ERJ3GEYJ273	M.RESISTOR CH 1/16W 27K	1	
R1450	ERJ3GEYJ394	M.RESISTOR CH 1/16W 390K	1	
R1451	ERJ3GEYG102	M.RESISTOR CH 1/16W 1K	1	
R1453	ERJ3GEY0R00	M.RESISTOR CH 1/16W 0	1	
R1454	ERJ3GEYJ105	M.RESISTOR CH 1/16W 1M	1	
R1455,56	ERJ3GEY0R00	M.RESISTOR CH 1/16W 0	2	
R1457,58	ERJ3GEYJ394	M.RESISTOR CH 1/16W 390K	2	
R1459-74	ERJ3GEYJ470	M.RESISTOR CH 1/16W 47	16	
R1475-82	ERJ3GEYJ103	M.RESISTOR CH 1/16W 10K	8	
R1483-90	ERJ3GEYJ470	M.RESISTOR CH 1/16W 47	8	
R1491,92	ERJ3GEY0R00	M.RESISTOR CH 1/16W 0	2	
R1493,94	ERJ6GEYG271	M.RESISTOR CH 1/10W 270	2	
R1500,01	ERJ3GEY0R00	M.RESISTOR CH 1/16W 0	2	
R1504-11	ERJ3GEY0R00	M.RESISTOR CH 1/16W 0	8	
R1537,38	ERJ3GEY0R00	M.RESISTOR CH 1/16W 0	2	
R1539-46	ERJ3GEYJ470	M.RESISTOR CH 1/16W 47	8	
R1547,48	ERJ3GEY0R00	M.RESISTOR CH 1/16W 0	2	
R1552-57	ERJ3GEY0R00	M.RESISTOR CH 1/16W 0	6	
R1558-60	ERJ3GEYJ470	M.RESISTOR CH 1/16W 47	3	
R1561-68	ERJ3GEY0R00	M.RESISTOR CH 1/16W 0	8	
R1571	ERJ3GEYG472	M.RESISTOR CH 1/16W 4.7K	1	
R1572,73	ERJ3GEYJ103	M.RESISTOR CH 1/16W 10K	2	
R1574	ERJ3GEYJ473	M.RESISTOR CH 1/16W 47K	1	
R1575-77	ERJ3GEY0R00	M.RESISTOR CH 1/16W 0	3	

Ref.No.	Part No.	Part Name & Description	Pcs	Remarks
R1581,82	ERJ3GEY0R00	M.RESISTOR CH 1/16W 0	2	
R1583,84	ERJ6GEYG102	M.RESISTOR CH 1/10W 1K	2	
R1585,86	ERJ6GEYG271	M.RESISTOR CH 1/10W 270	2	
R1587,88	ERJ6GEYG102	M.RESISTOR CH 1/10W 1K	2	
R1589	ERJ3GEYJ103	M.RESISTOR CH 1/16W 10K	1	
R1590-93	ERJ3GEY0R00	M.RESISTOR CH 1/16W 0	4	
R1594	ERJ3GEYJ103	M.RESISTOR CH 1/16W 10K	1	
R1595	ERJ3GEY0R00	M.RESISTOR CH 1/16W 0	1	
R1597	ERJ3GEY0R00	M.RESISTOR CH 1/16W 0	1	
R1600-03	ERJ3GEYJ103	M.RESISTOR CH 1/16W 10K	4	
R1604-07	ERJ3GEY0R00	M.RESISTOR CH 1/16W 0	4	
R1612-15	ERJ3GEYJ103	M.RESISTOR CH 1/16W 10K	4	
R1617	ERJ3GEYG102	M.RESISTOR CH 1/16W 1K	1	
R1618	ERJ3GEY0R00	M.RESISTOR CH 1/16W 0	1	
R1619-21	ERJ3GEYJ103	M.RESISTOR CH 1/16W 10K	3	
R1622-25	ERJ3GEY0R00	M.RESISTOR CH 1/16W 0	4	
R1626,27	ERJ3GEYJ101	M.RESISTOR CH 1/16W 100	2	
R1629,30	ERJ3GEYJ103	M.RESISTOR CH 1/16W 10K	2	
R1632-34	ERJ3GEYJ680	M.RESISTOR CH 1/16W 68	3	
R1635,36	ERJ3GEYJ101	M.RESISTOR CH 1/16W 100	2	
R1638,39	ERJ3GEYJ103	M.RESISTOR CH 1/16W 10K	2	
R1641-43	ERJ3GEYJ101	M.RESISTOR CH 1/16W 100	3	
R1644-46	ERJ3GEYJ103	M.RESISTOR CH 1/16W 10K	3	
R1649	ERJ3GEYJ101	M.RESISTOR CH 1/16W 100	1	
R1652	ERJ3GEYJ103	M.RESISTOR CH 1/16W 10K	1	
R1653	ERJ6GEYG102	M.RESISTOR CH 1/10W 1K	1	
R1654	ERJ3GEY0R00	M.RESISTOR CH 1/16W 0	1	
R1655,56	ERJ3GEYJ103	M.RESISTOR CH 1/16W 10K	2	
R1657	ERJ3GEYJ680	M.RESISTOR CH 1/16W 68	1	
R1658	ERJ3GEYJ101	M.RESISTOR CH 1/16W 100	1	
R1659	ERJ3GEYJ103	M.RESISTOR CH 1/16W 10K	1	
SW900	VSS0367-08B	SWITCH	1	
SW1000,01	VSS0367-04B	SWITCH	2	
SW1602	VSS0367-04B	SWITCH	1	
TG1	EYF6CU	TEST POINT	1	
TG1000	EYF6CU	TEST POINT	1	
TG1300	EYF6CU	TEST POINT	1	
TP8	EYF6CU	TEST POINT	1	
TP1000-03	EYF6CU	TEST POINT	4	
TP1005	EYF6CU	TEST POINT	1	
TP1011-15	EYF6CU	TEST POINT	5	
TP1100-02	EYF6CU	TEST POINT	3	
TP1304,05	EYF6CU	TEST POINT	2	
X100	VSX0641	CRYSTAL OSCILLATOR	1	
X600	VSX0821	CRYSTAL OSCILLATOR	1	H0J160500014
X1000	VSX0641	CRYSTAL OSCILLATOR	1	
X1300	VSX1001	CRYSTAL OSCILLATOR	1	H2C143500002
		MISCELLANEOUS		
	VMP6690	BUFF MOTHER HOLDER ANGLE	1	
	VML2143	CARD PULLER	1	
	VML2144	CARD PULLER	1	
	XYN26+C12	SCREW	8	
	XNG26EFXS	NUT	8	
■ E3	VEP83534A	F4 REC PB P.C.BOARD	1	(RTL)
C1	ECUX1E104ZFV	C.CAPACITOR CH 25V 0.1U	1	
C4	EEVHB1C100	E.CAPACITOR 16V 10U	1	
C6,C7	ECUX1E104ZFV	C.CAPACITOR CH 25V 0.1U	2	
C9	EEVHB1C100	E.CAPACITOR 16V 10U	1	
C14,15	ECUX1E104ZFV	C.CAPACITOR CH 25V 0.1U	2	
C16,17	EEVHB1C100	E.CAPACITOR 16V 10U	2	
C19	ECUX1E104ZFV	C.CAPACITOR CH 25V 0.1U	1	
C20	VCEA1CAP101	E.CAPACITOR 16V 100U	1	

Ref.No.	Part No.	Part Name & Description	Pcs	Remarks
C21	EEVHB1C100	E.CAPACITOR 16V 10U	1	
C25,26	EEVHB1C100	E.CAPACITOR 16V 10U	2	
C27-29	ECUX1E104ZFV	C.CAPACITOR CH 25V 0.1U	3	
C30	EEVHB1C100	E.CAPACITOR 16V 10U	1	
C31	F1L1E4750006	C.CAPACITOR 25V 4.7U	1	
C32	EEVHB1C100	E.CAPACITOR 16V 10U	1	
C33,34	ECUX1E104ZFV	C.CAPACITOR CH 25V 0.1U	2	
C35,36	F1L1E4750006	C.CAPACITOR 25V 4.7U	2	
C39	F1L1E4750006	C.CAPACITOR 25V 4.7U	1	
C40-42	ECUX1E104ZFV	C.CAPACITOR CH 25V 0.1U	3	
C43	EEVHB0J101	E.CAPACITOR 6.3V 100U	1	
C44	F1L1E4750006	C.CAPACITOR 25V 4.7U	1	
C45	ECUX1E104ZFV	C.CAPACITOR CH 25V 0.1U	1	
C46-48	EEVHB1C470	E.CAPACITOR 16V 47U	3	
C49-51	ECUX1E104ZFV	C.CAPACITOR CH 25V 0.1U	3	
C52	EEVHB1C100	E.CAPACITOR 16V 10U	1	
C53,54	ECUX1E104ZFV	C.CAPACITOR CH 25V 0.1U	2	
C55,56	F1L1E4750006	C.CAPACITOR 25V 4.7U	2	
C57	ECUX1E104ZFV	C.CAPACITOR CH 25V 0.1U	1	
C58	EEVHB0J101	E.CAPACITOR 6.3V 100U	1	
C100	ECUX1E104ZFV	C.CAPACITOR CH 25V 0.1U	1	
C101	ECUX1H151JCV	C.CAPACITOR CH 50V 150P	1	
C102-20	ECUX1E104ZFV	C.CAPACITOR CH 25V 0.1U	19	
C121	ECUX1H103KBV	C.CAPACITOR CH 50V 0.01U	1	
C122	EEVHB1C100	E.CAPACITOR 16V 10U	1	
C123	ECUX1E104ZFV	C.CAPACITOR CH 25V 0.1U	1	
C124	EEVHB1C100	E.CAPACITOR 16V 10U	1	
C125	EEVHB0J470	E.CAPACITOR 6.3V 47U	1	
C126,27	ECUX1E104ZFV	C.CAPACITOR CH 25V 0.1U	2	
C128	EEVHB1C100	E.CAPACITOR 16V 10U	1	
C129-32	ECUX1E104ZFV	C.CAPACITOR CH 25V 0.1U	4	
C133	EEVHP1E3R3	E.CAPACITOR 25V 3.3U	1	
C134,35	ECUX1E104ZFV	C.CAPACITOR CH 25V 0.1U	2	
C136,37	ECUX1H102JCV	C.CAPACITOR CH 50V 1000P	2	
C138	ECUX1E104ZFV	C.CAPACITOR CH 25V 0.1U	1	
C139	ECUM1C224KBN	C.CAPACITOR CH 16V 0.22U	1	
C140	ECUX1E104ZFV	C.CAPACITOR CH 25V 0.1U	1	
C141	F1L1E4750006	C.CAPACITOR 25V 4.7U	1	
C142-51	ECUX1E104ZFV	C.CAPACITOR CH 25V 0.1U	10	
C200-03	ECUX1E104ZFV	C.CAPACITOR CH 25V 0.1U	4	
C204	ECUX1H103KBV	C.CAPACITOR CH 50V 0.01U	1	
C205-08	ECUX1E104ZFV	C.CAPACITOR CH 25V 0.1U	4	
C209-14	ECUX1H103KBV	C.CAPACITOR CH 50V 0.01U	6	
C215	ECUM1C105ZFN	C.CAPACITOR CH 16V 1U	1	
C216,17	ECUX1C104KBV	C.CAPACITOR CH 16V 0.1U	2	
C218	ECUX1H103KBV	C.CAPACITOR CH 50V 0.01U	1	
C219	ECUX1E104ZFV	C.CAPACITOR CH 25V 0.1U	1	
C220	EEVHB1C470	E.CAPACITOR 16V 47U	1	
C221-41	ECUX1E104ZFV	C.CAPACITOR CH 25V 0.1U	21	
C300-08	ECUX1E104ZFV	C.CAPACITOR CH 25V 0.1U	9	
C330-48	ECUX1E104ZFV	C.CAPACITOR CH 25V 0.1U	19	
C400-08	ECUX1E104ZFV	C.CAPACITOR CH 25V 0.1U	9	
C430-34	ECUX1E104ZFV	C.CAPACITOR CH 25V 0.1U	5	
C435	ECUX1H220JCV	C.CAPACITOR CH 50V 22P	1	
C436-38	ECUX1E104ZFV	C.CAPACITOR CH 25V 0.1U	3	
C439	ECUX1H220JCV	C.CAPACITOR CH 50V 22P	1	
C440-43	ECUX1E104ZFV	C.CAPACITOR CH 25V 0.1U	4	
C444	ECUX1H221JCV	C.CAPACITOR CH 50V 220P	1	
C445-63	ECUX1E104ZFV	C.CAPACITOR CH 25V 0.1U	19	
C500,01	ECUX1E104ZFV	C.CAPACITOR CH 25V 0.1U	2	
C503-13	ECUX1E104ZFV	C.CAPACITOR CH 25V 0.1U	11	
C514	F1L1E4750006	C.CAPACITOR 25V 4.7U	1	
C517	ECUX1E104ZFV	C.CAPACITOR CH 25V 0.1U	1	
C519	ECUX1E104ZFV	C.CAPACITOR CH 25V 0.1U	1	
C521	ECUX1E104ZFV	C.CAPACITOR CH 25V 0.1U	1	
C523	ECUX1E104ZFV	C.CAPACITOR CH 25V 0.1U	1	
C527-30	ECUX1E104ZFV	C.CAPACITOR CH 25V 0.1U	4	
C531	ECUX1C105KBM	C.CAPACITOR CH 16V 1U	1	
C532	ECUX1E104ZFV	C.CAPACITOR CH 25V 0.1U	1	
C533	ECUX1C105KBM	C.CAPACITOR CH 16V 1U	1	
C537-40	ECUX1E104ZFV	C.CAPACITOR CH 25V 0.1U	4	
C541	ECUX1H103KBV	C.CAPACITOR CH 50V 0.01U	1	
C570-92	ECUX1E104ZFV	C.CAPACITOR CH 25V 0.1U	23	
C600	ECUX1H101JCV	C.CAPACITOR CH 50V 100P	1	
C601	ECUX1H060DCV	C.CAPACITOR CH 50V 6P	1	

Ref.No.	Part No.	Part Name & Description	Pcs	Remarks
C602	ECUX1H153KBV	C.CAPACITOR CH 50V 0.015U	1	
C603	ECUX1E104ZFV	C.CAPACITOR CH 25V 0.1U	1	
C604-07	ECUX1C104KBV	C.CAPACITOR CH 16V 0.1U	4	
C608	ECUX1H101JCV	C.CAPACITOR CH 50V 100P	1	
C609	ECUX1H103KBV	C.CAPACITOR CH 50V 0.01U	1	
C610	ECUX1C104KBV	C.CAPACITOR CH 16V 0.1U	1	
C611	ECUX1H103KBV	C.CAPACITOR CH 50V 0.01U	1	
C612	ECUX1E104ZFV	C.CAPACITOR CH 25V 0.1U	1	
C613,14	ECUX1H103KBV	C.CAPACITOR CH 50V 0.01U	2	
C615	ECUX1E104ZFV	C.CAPACITOR CH 25V 0.1U	1	
C616	ECUX1C104KBV	C.CAPACITOR CH 16V 0.1U	1	
C617	ECUX1E104ZFV	C.CAPACITOR CH 25V 0.1U	1	
C618	ECUX1C104KBV	C.CAPACITOR CH 16V 0.1U	1	
C619	ECUX1E104ZFV	C.CAPACITOR CH 25V 0.1U	1	
C620	ECUX1H472KBV	C.CAPACITOR CH 50V 4700P	1	
C621	ECUX1C104KBV	C.CAPACITOR CH 16V 0.1U	1	
C622-25	ECUX1E104ZFV	C.CAPACITOR CH 25V 0.1U	4	
C626	F1L1E4750006	C.CAPACITOR 25V 4.7U	1	
C627,28	ECUX1E104ZFV	C.CAPACITOR CH 25V 0.1U	2	
C629	F1L1E4750006	C.CAPACITOR 25V 4.7U	1	
C630	ECUX1E104ZFV	C.CAPACITOR CH 25V 0.1U	1	
C631	F1L1E4750006	C.CAPACITOR 25V 4.7U	1	
C632-34	ECUX1E104ZFV	C.CAPACITOR CH 25V 0.1U	3	
C635	F1L1E4750006	C.CAPACITOR 25V 4.7U	1	
C636,37	ECUX1E104ZFV	C.CAPACITOR CH 25V 0.1U	2	
C638	F1L1E4750006	C.CAPACITOR 25V 4.7U	1	
C639	ECUX1C105KBM	C.CAPACITOR CH 16V 1U	1	
C640	ECUX1E104ZFV	C.CAPACITOR CH 25V 0.1U	1	
C641	ECUX1C105KBM	C.CAPACITOR CH 16V 1U	1	
C642	ECUX1H101JCV	C.CAPACITOR CH 50V 100P	1	
C643	ECUX1H060DCV	C.CAPACITOR CH 50V 6P	1	
C644	ECUX1H153KBV	C.CAPACITOR CH 50V 0.015U	1	
C645	ECUX1E104ZFV	C.CAPACITOR CH 25V 0.1U	1	
C646-49	ECUX1C104KBV	C.CAPACITOR CH 16V 0.1U	4	
C650	ECUX1H101JCV	C.CAPACITOR CH 50V 100P	1	
C651	ECUX1H103KBV	C.CAPACITOR CH 50V 0.01U	1	
C652	ECUX1C104KBV	C.CAPACITOR CH 16V 0.1U	1	
C653	ECUX1H103KBV	C.CAPACITOR CH 50V 0.01U	1	
C654	ECUX1E104ZFV	C.CAPACITOR CH 25V 0.1U	1	
C655,56	ECUX1H103KBV	C.CAPACITOR CH 50V 0.01U	2	
C657	ECUX1E104ZFV	C.CAPACITOR CH 25V 0.1U	1	
C658	ECUX1C104KBV	C.CAPACITOR CH 16V 0.1U	1	
C659	ECUX1E104ZFV	C.CAPACITOR CH 25V 0.1U	1	
C660	ECUX1C104KBV	C.CAPACITOR CH 16V 0.1U	1	
C661	ECUX1E104ZFV	C.CAPACITOR CH 25V 0.1U	1	
C662	ECUX1H472KBV	C.CAPACITOR CH 50V 4700P	1	
C663	ECUX1C104KBV	C.CAPACITOR CH 16V 0.1U	1	
C664-67	ECUX1E104ZFV	C.CAPACITOR CH 25V 0.1U	4	
C668	F1L1E4750006	C.CAPACITOR 25V 4.7U	1	
C669,70	ECUX1E104ZFV	C.CAPACITOR CH 25V 0.1U	2	
C671	F1L1E4750006	C.CAPACITOR 25V 4.7U	1	
C672	ECUX1E104ZFV	C.CAPACITOR CH 25V 0.1U	1	
C673	F1L1E4750006	C.CAPACITOR 25V 4.7U	1	
C674-76	ECUX1E104ZFV	C.CAPACITOR CH 25V 0.1U	3	
C677	F1L1E4750006	C.CAPACITOR 25V 4.7U	1	
C678,79	ECUX1E104ZFV	C.CAPACITOR CH 25V 0.1U	2	
C680	F1L1E4750006	C.CAPACITOR 25V 4.7U	1	
C681	ECUX1C105KBM	C.CAPACITOR CH 16V 1U	1	
C682	ECUX1E104ZFV	C.CAPACITOR CH 25V 0.1U	1	
C683	ECUX1C105KBM	C.CAPACITOR CH 16V 1U	1	
C700	ECUX1H103KBV	C.CAPACITOR CH 50V 0.01U	1	
C701	ECUX1E104ZFV	C.CAPACITOR CH 25V 0.1U	1	
C702	EEVHB0J330	E.CAPACITOR 6.3V 33U	1	
C703	ECUX1E104ZFV	C.CAPACITOR CH 25V 0.1U	1	
C704	ECUM1C224KBN	C.CAPACITOR CH 16V 0.22U	1	
C705-09	ECUX1E104ZFV	C.CAPACITOR CH 25V 0.1U	5	
C711	ECUX1H103KBV	C.CAPACITOR CH 50V 0.01U	1	
C713	ECUX1E104ZFV	C.CAPACITOR CH 25V 0.1U	1	
C715	ECUX1E104ZFV	C.CAPACITOR CH 25V 0.1U	1	
C716	ECUX1H103KBV	C.CAPACITOR CH 50V 0.01U	1	
C717,18	ECUX1E104ZFV	C.CAPACITOR CH 25V 0.1U	2	
C719	ECUX1H102JCV	C.CAPACITOR CH 50V 1000P	1	
C720-31	ECUX1E104ZFV	C.CAPACITOR CH 25V 0.1U	12	
C800	ECUX1H180JCV	C.CAPACITOR CH 50V 18P	1	
C801	ECUX1H103KBV	C.CAPACITOR CH 50V 0.01U	1	

Ref.No.	Part No.	Part Name & Description	Pcs	Remarks
C802-05	ECUX1E104ZFV	C.CAPACITOR CH 25V 0.1U	4	
C806	ECUM1C105ZFN	C.CAPACITOR CH 16V 1U	1	
C807-16	ECUX1E104ZFV	C.CAPACITOR CH 25V 0.1U	10	
C830-32	ECUX1E104ZFV	C.CAPACITOR CH 25V 0.1U	3	
C833	ECUX1H102JCV	C.CAPACITOR CH 50V 1000P	1	
C834-37	ECUX1E104ZFV	C.CAPACITOR CH 25V 0.1U	4	
C838	ECUX1H102JCV	C.CAPACITOR CH 50V 1000P	1	
C839-41	ECUX1E104ZFV	C.CAPACITOR CH 25V 0.1U	3	
C850-55	ECUX1E104ZFV	C.CAPACITOR CH 25V 0.1U	6	
C856	ECUX1H680JCV	C.CAPACITOR CH 50V 68P	1	
C857	ECUX1E104ZFV	C.CAPACITOR CH 25V 0.1U	1	
C858	EEVHB1C100	E.CAPACITOR 16V 10U	1	
C859	ECUX1E104ZFV	C.CAPACITOR CH 25V 0.1U	1	
C860	EEVHB1C100	E.CAPACITOR 16V 10U	1	
C861,62	ECUX1E104ZFV	C.CAPACITOR CH 25V 0.1U	2	
C863	ECUX1H102JCV	C.CAPACITOR CH 50V 1000P	1	
C864	ECUX1H020CCV	C.CAPACITOR CH 50V 2P	1	
C865,66	EEVHB1C100	E.CAPACITOR 16V 10U	2	
C867,68	ECUX1E104ZFV	C.CAPACITOR CH 25V 0.1U	2	
C869	ECUX1H101JCV	C.CAPACITOR CH 50V 100P	1	
C870	ECUX1E104ZFV	C.CAPACITOR CH 25V 0.1U	1	
C871	ECUX1H102JCV	C.CAPACITOR CH 50V 1000P	1	
C872	ECUX1E104ZFV	C.CAPACITOR CH 25V 0.1U	1	
C873	EEVHP1E3R3	E.CAPACITOR 25V 3.3U	1	
C874	ECUX1E104ZFV	C.CAPACITOR CH 25V 0.1U	1	
C875	EEVHB1C100	E.CAPACITOR 16V 10U	1	
C876	ECUX1E104ZFV	C.CAPACITOR CH 25V 0.1U	1	
C877,78	EEVHB1C100	E.CAPACITOR 16V 10U	2	
C879,80	ECUX1E104ZFV	C.CAPACITOR CH 25V 0.1U	2	
C881	ECUX1H020CCV	C.CAPACITOR CH 50V 2P	1	
C882	ECUX1H103KBV	C.CAPACITOR CH 50V 0.01U	1	
C883	ECUX1H050CCV	C.CAPACITOR CH 50V 5P	1	
C884	ECUX1E104ZFV	C.CAPACITOR CH 25V 0.1U	1	
C885,86	EEVHB1C100	E.CAPACITOR 16V 10U	2	
C887,88	ECUX1E104ZFV	C.CAPACITOR CH 25V 0.1U	2	
C889	ECUX1H101JCV	C.CAPACITOR CH 50V 100P	1	
C890	ECUX1E104ZFV	C.CAPACITOR CH 25V 0.1U	1	
C900-10	ECUX1E104ZFV	C.CAPACITOR CH 25V 0.1U	11	
C912-23	ECUX1E104ZFV	C.CAPACITOR CH 25V 0.1U	12	
C952-67	ECUX1E104ZFV	C.CAPACITOR CH 25V 0.1U	16	
D1-D4	MA701A	DIODE	4	
D7-10	MA701A	DIODE	4	
D100,01	MA152K	DIODE	2	
D430,31	LN1251CAL	DIODE	2	
D500	LN1251CAL	DIODE	1	
D600	LN1251CAL	DIODE	1	
D601,02	M1MA151K	DIODE	2	
D603,04	LN1251CAL	DIODE	2	
D605,06	M1MA151K	DIODE	2	
D607	LN1251CAL	DIODE	1	
D850,51	MA153	DIODE	2	
D950	LN1251CAL	DIODE	1	
FL850	VLF1462	FILTER	1	
IC1,C2	NJM78L05UA	IC	2	C0CBADC00010
IC3,C4	LT1086CM	IC	2	C0CBAYG00001
IC5,C6	LT1118CT25	IC	2	
IC7	NJM78L09UA	IC	1	C0CBAHC00002
IC8	NJM79L09UA	IC	1	C0CABBF00001
IC9	LT1117CST	IC	1	
IC100	IDTLVC16245F	IC	1	
IC101	TC7S02FU	IC	1	
IC102,03	SN74S1051NS	IC	2	
IC104	XC62FP3002M	IC	1	
IC105	C1ZBZ0001837	IC	1	
IC106	TLC2933IPWR	IC	1	
IC107	IDTLVC16245F	IC	1	
IC108,09	74F541SJ	IC	2	C0JBCZ000190
IC110	74F245SJ	IC	1	C0JBCZ000183
IC111	TLCX245FT	IC	1	
IC112	MC10H124M	IC	1	C0JBZZ000020
IC113	TVHT244FT	IC	1	
IC114	NJM082BM	IC	1	C0ABEB000017

Ref.No.	Part No.	Part Name & Description	Pcs	Remarks
IC115	NJM2100MD	IC	1	
IC116	TLCX74FT	IC	1	
IC117	TVHC245FT	IC	1	
IC200,01	D4564163A10B	IC	2	
IC202	MN7F008B4C	IC	1	
IC203	C1ZBZ0001691	IC	1	
IC204,05	MC10H125M	IC	2	
IC206	TVHC245FT	IC	1	
IC207	MC10H124M	IC	1	C0JBZZ000020
IC300	C1ZBZ0001776	IC	1	
IC301	TVHC245FT	IC	1	
IC330,31	MS51V8221-3G	IC	2	
IC332,33	IDTLVC16245F	IC	2	
IC334	TVHC245FT	IC	1	
IC335	C1ZBZ0001890	IC	1	
IC400,01	SN74S1051NS	IC	2	
IC402,03	IDT71321L55F	IC	2	C3HBCC000002
IC406,07	74F541SJ	IC	2	C0JBCZ000190
IC408	74F245SJ	IC	1	C0JBCZ000183
IC409,10	TVHC245FT	IC	2	
IC430	IDTLVC16245F	IC	1	
IC431	M32160F4UFP	IC	1	
IC432	S80727ANDQ	IC	1	
IC433	TVHU04FT	IC	1	
IC434	TVHC74FT	IC	1	
IC435,36	NLVT245FT	IC	2	
IC437,38	TVHC573FT	IC	2	
IC439	NLVT245FT	IC	1	
IC440	TC7W241FU	IC	1	
IC441	TC7W14FU	IC	1	C0JBAZ000525
IC442	TVHC08FT	IC	1	
IC443	TLCX08F	IC	1	
IC500	C1ZBZ0001890	IC	1	
IC501,02	HM530281-20	IC	2	C3HBJC000001
IC504,05	HM530281-20	IC	2	C3HBJC000001
IC506	GS9023-CFY	IC	1	
IC507	C1AB00000367	IC	1	
IC570	C1ZBZ0001890	IC	1	
IC571,72	HM530281-20	IC	2	C3HBJC000001
IC573	MS51V8221-3G	IC	1	
IC574,75	HM530281-20	IC	2	C3HBJC000001
IC576	GS9023-CFY	IC	1	
IC577	TC7SH04FU	IC	1	
IC579	TLCX244FT	IC	1	
IC600	GS9025-CQM	IC	1	C1AB00000363
IC601	GS9020-CFV	IC	1	C1AB00000364
IC602	GS9028-CKA	IC	1	C1AB00000365
IC603	GS9025-CQM	IC	1	C1AB00000363
IC604	GS9020-CFV	IC	1	C1AB00000364
IC605	GS9028-CKA	IC	1	C1AB00000365
IC700	TC7SHU04FU	IC	1	
IC701	BH7086KV	IC	1	C1ZBZ0001649
IC702	TC7SH04FU	IC	1	
IC703	MN673797A	IC	1	
IC704	IDTLVC16245F	IC	1	
IC705	MC10H124M	IC	1	C0JBZZ000020
IC706	MC10H125M	IC	1	
IC707-09	TVHC257FT	IC	3	
IC800	MN47V07AF	IC	1	MN4707F
IC801	L7A1644	IC	1	C1AA00000231
IC802	MN47V07AF	IC	1	MN4707F
IC803,04	TLCX245FT	IC	2	
IC830,31	UPD65943G028	IC	2	
IC832,33	TVHC574FT	IC	2	
IC850	CXD1175AM	IC	1	
IC851	T220E7202AF1	IC	1	
IC852	LT1228CS8	IC	1	
IC853	TC4W53FU	IC	1	
IC854	NJM79L05UA	IC	1	
IC855	TC7W241FU	IC	1	
IC856	NJM082BM	IC	1	C0ABEB000017
IC857	TVHT244FT	IC	1	
IC900,01	IDTLVC16245F	IC	2	
IC902	C1ZBZ0001890	IC	1	
IC903	TVHC574FT	IC	1	

Ref.No.	Part No.	Part Name & Description	Pcs	Remarks
IC904	TVHC245FT	IC	1	
IC905	MS51V8221-3G	IC	1	
IC908-11	MS51V8221-3G	IC	4	
IC950,51	XC1804VQ44C	IC	2	
IC952,53	TVHC245FT	IC	2	
IC954,55	TC7W125FU	IC	2	
IC956	UPD6456T611Y	IC	1	C1AB00000555
IC957	TC7W14FU	IC	1	C0JBAZ000525
IC958	TVHC245FT	IC	1	
J500	VJP3461	CONNECTOR (MALE)	1	K1QZA1BA0001
J600	VJP3461	CONNECTOR (MALE)	1	K1QZA1BA0001
J601	VJP4131	CONNECTOR (MALE)	1	K1QZB1AD0003
J602	VJP3461	CONNECTOR (MALE)	1	K1QZA1BA0001
J603	VJP4131	CONNECTOR (MALE)	1	K1QZB1AD0003
L1	VLF1151A132	COIL	1	
L3-L5	VLF1151A132	COIL	3	
L9-12	VLF1151A132	COIL	4	
L100-03	VLQ0319K470	COIL 47UH	4	G1C470K00013
L200	VLQ0319K150	COIL 15UH	1	G1C150KA0002
L500	VLF1151A132	COIL	1	
L501,02	VLQ0426J010	COIL 1UH	2	
L600	VLQ0426J015	COIL 15UH	1	
L601-03	VLQ0319K100	COIL 10UH	3	G1C100K00023
L604,05	VLF1151A132	COIL	2	
L606,07	VLQ0426J010	COIL 1UH	2	
L608	VLQ0426J015	COIL 15UH	1	
L609-11	VLQ0319K100	COIL 10UH	3	G1C100K00023
L612,13	VLF1151A132	COIL	2	
L614,15	VLQ0426J010	COIL 1UH	2	
L700	VLQ0319K470	COIL 47UH	1	G1C470K00013
L850-54	VLQ0319K470	COIL 47UH	5	G1C470K00013
L855	VLQ0163J150	COIL 15UH	1	
L856	VLQ0163J390	COIL 39UH	1	
L857,58	VLQ0319K470	COIL 47UH	2	G1C470K00013
P1,P2	VJP3510	CONNECTOR (MALE)	2	K1KAC8B00004
P330	VJS3791D010	CONNECTOR (FEMALE)	1	K1MN10B00021
P331	VJS3791D040	CONNECTER (FEMALE)	1	K1MN40B00003
P400	VJS3791D040	CONNECTER (FEMALE)	1	K1MN40B00003
P430	VJS3791B020	CONNECTOR (FEMALE)	1	
P952	VJP3125B008	CONNECTOR (MALE)	1	
Q850	2SB709A-R	TRANSISTOR	1	
Q851	2SA1532-B	TRANSISTOR	1	
Q852	2SB709A-R	TRANSISTOR	1	
QR400,01	UN2214	TRANSISTOR-RESISTOR	2	
QR500	UN2214	TRANSISTOR-RESISTOR	1	
QR600-03	UN2214	TRANSISTOR-RESISTOR	4	
R12	ERJ3RBD111	M.RESISTOR CH 1/16W 110	1	
R13	ERJ3RBD331	M.RESISTOR CH 1/16W 330	1	
R14	ERJ3RBD111	M.RESISTOR CH 1/16W 110	1	
R15	ERJ3RBD181	M.RESISTOR CH 1/16W 180	1	
R17	ERJ3RBD101	M.RESISTOR CH 1/16W 100	1	
R18	ERJ3RED470	M.RESISTOR CH 1/16W 47	1	
R84-99	ERJ3GEYJ203	M.RESISTOR CH 1/16W 20K	16	
R100-02	ERJ3GEYJ103	M.RESISTOR CH 1/16W 10K	3	
R103	ERJ3GEYJ101	M.RESISTOR CH 1/16W 100	1	
R104-08	ERJ3GEYJ103	M.RESISTOR CH 1/16W 10K	5	
R109,10	ERJ3GEYG332	M.RESISTOR CH 1/16W 3.3K	2	
R111	ERJ3GEYG102	M.RESISTOR CH 1/16W 1K	1	
R112,13	ERJ3GEYJ101	M.RESISTOR CH 1/16W 100	2	
R114-21	ERJ3GEYJ272	M.RESISTOR CH 1/16W 2.7K	8	
R122,23	ERJ3GEYJ680	M.RESISTOR CH 1/16W 68	2	
R124,25	ERJ3GEY0R00	M.RESISTOR CH 1/16W 0	2	
R126	ERJ3GEYG102	M.RESISTOR CH 1/16W 1K	1	
R127	ERJ3GEYJ473	M.RESISTOR CH 1/16W 47K	1	
R128	ERJ3GEYG471	M.RESISTOR CH 1/16W 470	1	
R129	ERJ3GEYG102	M.RESISTOR CH 1/16W 1K	1	
R130	ERJ3GEYG472	M.RESISTOR CH 1/16W 4.7K	1	
R131,32	ERJ3GEY0R00	M.RESISTOR CH 1/16W 0	2	
R133,34	ERJ3GEYG472	M.RESISTOR CH 1/16W 4.7K	2	

Ref.No.	Part No.	Part Name & Description	Pcs	Remarks
R135	ERJ3GEYJ683	M.RESISTOR CH 1/16W 68K	1	
R136,37	ERJ3GEYJ103	M.RESISTOR CH 1/16W 10K	2	
R138	ERJ3GEYJ473	M.RESISTOR CH 1/16W 47K	1	
R139	ERJ3GEYJ333	M.RESISTOR CH 1/16W 33K	1	
R140	ERJ3GEYJ105	M.RESISTOR CH 1/16W 1M	1	
R141,42	ERJ3GEYJ103	M.RESISTOR CH 1/16W 10K	2	
R143	ERJ3GEYJ223	M.RESISTOR CH 1/16W 22K	1	
R144	ERJ3GEYJ105	M.RESISTOR CH 1/16W 1M	1	
R145	ERJ3GEYG102	M.RESISTOR CH 1/16W 1K	1	
R146	ERJ3GEYJ220	M.RESISTOR CH 1/16W 22	1	
R147	ERJ3GEYJ103	M.RESISTOR CH 1/16W 10K	1	
R148	ERJ3GEYG102	M.RESISTOR CH 1/16W 1K	1	
R149	ERJ3GEYJ103	M.RESISTOR CH 1/16W 10K	1	
R150	ERJ3RBD182	M.RESISTOR CH 1/16W 1.8K	1	
R151	ERJ3GEYJ220	M.RESISTOR CH 1/16W 22	1	
R152,53	ERJ3GEYJ680	M.RESISTOR CH 1/16W 68	2	
R154	ERJ3GEYJ220	M.RESISTOR CH 1/16W 22	1	
R155	ERJ3GEYJ680	M.RESISTOR CH 1/16W 68	1	
R156,57	ERJ3GEYG102	M.RESISTOR CH 1/16W 1K	2	
R158-69	ERJ3GEYJ220	M.RESISTOR CH 1/16W 22	12	
R170,71	ERJ3GEYG471	M.RESISTOR CH 1/16W 470	2	
R172-79	ERJ3GEYJ220	M.RESISTOR CH 1/16W 22	8	
R180-85	ERJ3GEYG471	M.RESISTOR CH 1/16W 470	6	
R186-93	ERJ3GEY0R00	M.RESISTOR CH 1/16W 0	8	
R194,95	ERJ3GEYG102	M.RESISTOR CH 1/16W 1K	2	
R200-05	ERJ3GEYJ103	M.RESISTOR CH 1/16W 10K	6	
R206-13	ERJ3GEY0R00	M.RESISTOR CH 1/16W 0	8	
R214-21	ERJ3GEYJ103	M.RESISTOR CH 1/16W 10K	8	
R222-24	ERJ3GEYJ560	M.RESISTOR CH 1/16W 56	3	
R225	ERJ3GEYJ220	M.RESISTOR CH 1/16W 22	1	
R226-30	ERJ3GEYJ560	M.RESISTOR CH 1/16W 56	5	
R231	ERJ3GEYJ103	M.RESISTOR CH 1/16W 10K	1	
R232	ERJ3GEYJ560	M.RESISTOR CH 1/16W 56	1	
R233-36	ERJ3GEYJ220	M.RESISTOR CH 1/16W 22	4	
R237-41	ERJ3GEYJ560	M.RESISTOR CH 1/16W 56	5	
R242	ERJ3GEYJ220	M.RESISTOR CH 1/16W 22	1	
R243,44	ERJ3GEYJ560	M.RESISTOR CH 1/16W 56	2	
R245-48	ERJ3GEYJ220	M.RESISTOR CH 1/16W 22	4	
R249	ERJ3GEYJ103	M.RESISTOR CH 1/16W 10K	1	
R250-53	ERJ3GEYJ101	M.RESISTOR CH 1/16W 100	4	
R254-56	ERJ3GEYJ122	M.RESISTOR CH 1/16W 1.2K	3	
R257,58	ERJ3GEYJ220	M.RESISTOR CH 1/16W 22	2	
R259-63	ERJ3GEYJ122	M.RESISTOR CH 1/16W 1.2K	5	
R264	ERJ3GEYJ101	M.RESISTOR CH 1/16W 100	1	
R265	ERJ3GEYG102	M.RESISTOR CH 1/16W 1K	1	
R266-73	ERJ3GEYJ220	M.RESISTOR CH 1/16W 22	8	
R274-81	ERJ6GEYG331	M.RESISTOR CH 1/10W 330	8	
R282-89	ERJ3GEY0R00	M.RESISTOR CH 1/16W 0	8	
R290,91	ERJ3GEYJ680	M.RESISTOR CH 1/16W 68	2	
R300-07	ERJ3GEYJ203	M.RESISTOR CH 1/16W 20K	8	
R310-14	ERJ3GEYJ680	M.RESISTOR CH 1/16W 68	5	
R315	ERJ3GEYG102	M.RESISTOR CH 1/16W 1K	1	
R316-23	ERJ3GEYJ220	M.RESISTOR CH 1/16W 22	8	
R324	ERJ3GEYG102	M.RESISTOR CH 1/16W 1K	1	
R330-34	ERJ3GEYJ103	M.RESISTOR CH 1/16W 10K	5	
R335	ERJ3GEYG102	M.RESISTOR CH 1/16W 1K	1	
R336,37	ERJ3GEYJ103	M.RESISTOR CH 1/16W 10K	2	
R338	ERJ3GEYG102	M.RESISTOR CH 1/16W 1K	1	
R339-46	ERJ3GEYJ103	M.RESISTOR CH 1/16W 10K	8	
R347-54	ERJ3GEYJ220	M.RESISTOR CH 1/16W 22	8	
R355	ERJ3GEYJ103	M.RESISTOR CH 1/16W 10K	1	
R356-71	ERJ3GEYJ220	M.RESISTOR CH 1/16W 22	16	
R372-76	ERJ3GEYG102	M.RESISTOR CH 1/16W 1K	5	
R377-81	ERJ3GEYJ680	M.RESISTOR CH 1/16W 68	5	
R382	ERJ3GEYG472	M.RESISTOR CH 1/16W 4.7K	1	
R383,84	ERJ3GEYG102	M.RESISTOR CH 1/16W 1K	2	
R390	ERJ3GEYJ103	M.RESISTOR CH 1/16W 10K	1	
R391-96	ERJ3GEYJ220	M.RESISTOR CH 1/16W 22	6	
R397	ERJ3GEYJ101	M.RESISTOR CH 1/16W 100	1	
R398	ERJ3GEYG102	M.RESISTOR CH 1/16W 1K	1	
R399	ERJ3GEYJ101	M.RESISTOR CH 1/16W 100	1	
R400	ERJ3GEYG472	M.RESISTOR CH 1/16W 4.7K	1	
R401-12	ERJ3GEYJ272	M.RESISTOR CH 1/16W 2.7K	12	
R414	ERJ3GEY0R00	M.RESISTOR CH 1/16W 0	1	
R415,16	ERJ3GEYJ103	M.RESISTOR CH 1/16W 10K	2	

Ref.No.	Part No.	Part Name & Description	Pcs	Remarks
R417,18	ERJ3GEYG102	M.RESISTOR CH 1/16W 1K	2	
R419-22	ERJ3GEYJ220	M.RESISTOR CH 1/16W 22	4	
R423-27	ERJ3GEYG102	M.RESISTOR CH 1/16W 1K	5	
R430	ERJ3GEYJ105	M.RESISTOR CH 1/16W 1M	1	
R431,32	ERJ3GEY0R00	M.RESISTOR CH 1/16W 0	2	
R433-37	ERJ3GEYG102	M.RESISTOR CH 1/16W 1K	5	
R438	ERJ3GEYJ220	M.RESISTOR CH 1/16W 22	1	
R439-41	ERJ3GEYG102	M.RESISTOR CH 1/16W 1K	3	
R442-45	ERJ3GEYJ104	M.RESISTOR CH 1/16W 100K	4	
R446,47	ERJ3GEY0R00	M.RESISTOR CH 1/16W 0	2	
R448-50	ERJ3GEYG472	M.RESISTOR CH 1/16W 4.7K	3	
R451,52	ERJ3GEY0R00	M.RESISTOR CH 1/16W 0	2	
R454,55	ERJ3GEY0R00	M.RESISTOR CH 1/16W 0	2	
R458	ERJ3GEYG471	M.RESISTOR CH 1/16W 470	1	
R459	ERJ3GEYG472	M.RESISTOR CH 1/16W 4.7K	1	
R460	ERJ3GEYJ220	M.RESISTOR CH 1/16W 22	1	
R461-63	ERJ3GEYG472	M.RESISTOR CH 1/16W 4.7K	3	
R464	ERJ3GEYG471	M.RESISTOR CH 1/16W 470	1	
R465	ERJ3GEYG472	M.RESISTOR CH 1/16W 4.7K	1	
R466	ERJ3GEYG471	M.RESISTOR CH 1/16W 470	1	
R467,68	ERJ3GEYG472	M.RESISTOR CH 1/16W 4.7K	2	
R469	ERJ3GEYG102	M.RESISTOR CH 1/16W 1K	1	
R470-74	ERJ3GEYG472	M.RESISTOR CH 1/16W 4.7K	5	
R475	ERJ3GEYJ101	M.RESISTOR CH 1/16W 100	1	
R476	ERJ3GEYG472	M.RESISTOR CH 1/16W 4.7K	1	
R477	ERJ3GEYG102	M.RESISTOR CH 1/16W 1K	1	
R478,79	ERJ3GEYG472	M.RESISTOR CH 1/16W 4.7K	2	
R480	ERJ3GEYG102	M.RESISTOR CH 1/16W 1K	1	
R481	ERJ3GEY0R00	M.RESISTOR CH 1/16W 0	1	
R484	ERJ3GEYJ103	M.RESISTOR CH 1/16W 10K	1	
R485	ERJ3GEYG471	M.RESISTOR CH 1/16W 470	1	
R486-89	ERJ3GEYJ220	M.RESISTOR CH 1/16W 22	4	
R490-96	ERJ3GEY0R00	M.RESISTOR CH 1/16W 0	7	
R497	ERJ3GEYJ220	M.RESISTOR CH 1/16W 22	1	
R498,99	ERJ3GEY0R00	M.RESISTOR CH 1/16W 0	2	
R500,01	ERJ3GEYG332	M.RESISTOR CH 1/16W 3.3K	2	
R502,03	ERJ3GEYJ680	M.RESISTOR CH 1/16W 68	2	
R504	ERJ3GEYG102	M.RESISTOR CH 1/16W 1K	1	
R505-07	ERJ3GEYJ680	M.RESISTOR CH 1/16W 68	3	
R508	ERJ3GEYG102	M.RESISTOR CH 1/16W 1K	1	
R509-18	ERJ3GEYJ101	M.RESISTOR CH 1/16W 100	10	
R519	ERJ3GEYG102	M.RESISTOR CH 1/16W 1K	1	
R529	ERJ3GEY0R00	M.RESISTOR CH 1/16W 0	1	
R531	ERJ3GEYJ103	M.RESISTOR CH 1/16W 10K	1	
R533	ERJ3GEYJ103	M.RESISTOR CH 1/16W 10K	1	
R537	ERJ3RHD3740	M.RESISTOR CH 1/16W 370K	1	
R541	ERJ3GEYJ103	M.RESISTOR CH 1/16W 10K	1	
R543	ERJ3GEYJ821	M.RESISTOR CH 1/16W 820	1	
R545	ERJ3RED510	M.RESISTOR CH 1/16W 51	1	
R549	ERJ3GEYJ103	M.RESISTOR CH 1/16W 10K	1	
R550	ERJ3GEYG102	M.RESISTOR CH 1/16W 1K	1	
R553-56	ERJ3RED750	M.RESISTOR CH 1/16W 75	4	
R561	ERJ3RED750	M.RESISTOR CH 1/16W 75	1	
R570,71	ERJ3GEYJ680	M.RESISTOR CH 1/16W 68	2	
R572	ERJ3GEYG102	M.RESISTOR CH 1/16W 1K	1	
R573-75	ERJ3GEYJ680	M.RESISTOR CH 1/16W 68	3	
R576	ERJ3GEYG102	M.RESISTOR CH 1/16W 1K	1	
R577-79	ERJ3GEYJ220	M.RESISTOR CH 1/16W 22	3	
R600	ERJ3GEYG102	M.RESISTOR CH 1/16W 1K	1	
R601,02	ERJ3GEYJ103	M.RESISTOR CH 1/16W 10K	2	
R603	ERJ3GEY0R00	M.RESISTOR CH 1/16W 0	1	
R604,05	ERJ3GEYJ103	M.RESISTOR CH 1/16W 10K	2	
R606	ERJ3GEYG102	M.RESISTOR CH 1/16W 1K	1	
R607	ERJ3GEY0R00	M.RESISTOR CH 1/16W 0	1	
R608	ERJ3GEYJ391	M.RESISTOR CH 1/16W 390	1	
R609	ERJ3GEY0R00	M.RESISTOR CH 1/16W 0	1	
R610	ERJ3GEYJ103	M.RESISTOR CH 1/16W 10K	1	
R611	ERJ3GEY0R00	M.RESISTOR CH 1/16W 0	1	
R612	ERJ3RED750	M.RESISTOR CH 1/16W 75	1	
R613	ERJ3RED390	M.RESISTOR CH 1/16W 39	1	
R614	ERJ3GEYJ470	M.RESISTOR CH 1/16W 47	1	
R615	ERJ3RED750	M.RESISTOR CH 1/16W 75	1	
R616	ERJ3GEYJ470	M.RESISTOR CH 1/16W 47	1	
R617	ERJ3RED750	M.RESISTOR CH 1/16W 75	1	
R618-25	ERJ3GEYJ470	M.RESISTOR CH 1/16W 47	8	

Ref.No.	Part No.	Part Name & Description	Pcs	Remarks
R627	ERJ3GEYJ470	M.RESISTOR CH 1/16W 47	1	
R628	ERJ3GEYJ123	M.RESISTOR CH 1/16W 12K	1	
R629	ERJ3GEY0R00	M.RESISTOR CH 1/16W 0	1	
R630	ERJ3GEYJ123	M.RESISTOR CH 1/16W 12K	1	
R631	ERJ3GEY0R00	M.RESISTOR CH 1/16W 0	1	
R632	ERJ3GEYG102	M.RESISTOR CH 1/16W 1K	1	
R633	ERJ3GEYJ821	M.RESISTOR CH 1/16W 820	1	
R634,35	ERJ3RED510	M.RESISTOR CH 1/16W 51	2	
R636	ERJ6RED560	M.RESISTOR CH 1/10W 56	1	
R637-41	ERJ3RED750	M.RESISTOR CH 1/16W 75	5	
R642	ERJ3GEY0R00	M.RESISTOR CH 1/16W 0	1	
R643	ERJ3GEYG102	M.RESISTOR CH 1/16W 1K	1	
R644,45	ERJ3GEYJ103	M.RESISTOR CH 1/16W 10K	2	
R646	ERJ3GEYG102	M.RESISTOR CH 1/16W 1K	1	
R647	ERJ3GEY0R00	M.RESISTOR CH 1/16W 0	1	
R648	ERJ3GEYJ391	M.RESISTOR CH 1/16W 390	1	
R649	ERJ3GEY0R00	M.RESISTOR CH 1/16W 0	1	
R650	ERJ3GEYJ103	M.RESISTOR CH 1/16W 10K	1	
R651	ERJ3GEY0R00	M.RESISTOR CH 1/16W 0	1	
R652	ERJ3RED750	M.RESISTOR CH 1/16W 75	1	
R653	ERJ3RED390	M.RESISTOR CH 1/16W 39	1	
R654	ERJ3GEYJ470	M.RESISTOR CH 1/16W 47	1	
R655	ERJ3RED750	M.RESISTOR CH 1/16W 75	1	
R656	ERJ3GEYJ470	M.RESISTOR CH 1/16W 47	1	
R657	ERJ3RED750	M.RESISTOR CH 1/16W 75	1	
R658-65	ERJ3GEYJ470	M.RESISTOR CH 1/16W 47	8	
R667	ERJ3GEYJ470	M.RESISTOR CH 1/16W 47	1	
R668	ERJ3GEYJ123	M.RESISTOR CH 1/16W 12K	1	
R669	ERJ3GEY0R00	M.RESISTOR CH 1/16W 0	1	
R670	ERJ3GEYJ123	M.RESISTOR CH 1/16W 12K	1	
R671	ERJ3GEY0R00	M.RESISTOR CH 1/16W 0	1	
R672	ERJ3GEYG102	M.RESISTOR CH 1/16W 1K	1	
R673	ERJ3GEYJ821	M.RESISTOR CH 1/16W 820	1	
R674,75	ERJ3RED510	M.RESISTOR CH 1/16W 51	2	
R676	ERJ6RED560	M.RESISTOR CH 1/10W 56	1	
R677-81	ERJ3RED750	M.RESISTOR CH 1/16W 75	5	
R682,83	ERJ3GEYJ103	M.RESISTOR CH 1/16W 10K	2	
R702-04	ERJ3GEY0R00	M.RESISTOR CH 1/16W 0	3	
R706	ERJ3GEYJ105	M.RESISTOR CH 1/16W 1M	1	
R707,08	ERJ3GEY0R00	M.RESISTOR CH 1/16W 0	2	
R712	ERJ3GEYJ104	M.RESISTOR CH 1/16W 100K	1	
R717,18	ERJ3GEYG471	M.RESISTOR CH 1/16W 470	2	
R719	ERJ3GEYJ183	M.RESISTOR CH 1/16W 18K	1	
R720	ERJ3GEYJ223	M.RESISTOR CH 1/16W 22K	1	
R721	ERJ3GEYJ220	M.RESISTOR CH 1/16W 22	1	
R722-25	ERJ3GEY0R00	M.RESISTOR CH 1/16W 0	4	
R727	ERJ3GEY0R00	M.RESISTOR CH 1/16W 0	1	
R728	ERJ3GEYJ560	M.RESISTOR CH 1/16W 56	1	
R729	ERJ3GEYJ220	M.RESISTOR CH 1/16W 22	1	
R730	ERJ3GEYJ560	M.RESISTOR CH 1/16W 56	1	
R735,36	ERJ3GEYJ560	M.RESISTOR CH 1/16W 56	2	
R737,38	ERJ3GEYJ220	M.RESISTOR CH 1/16W 22	2	
R739	ERJ3GEYJ103	M.RESISTOR CH 1/16W 10K	1	
R740	ERJ3GEY0R00	M.RESISTOR CH 1/16W 0	1	
R741,42	ERJ3GEYJ103	M.RESISTOR CH 1/16W 10K	2	
R743,44	ERJ3GEYJ101	M.RESISTOR CH 1/16W 100	2	
R745-47	ERJ3GEYG102	M.RESISTOR CH 1/16W 1K	3	
R748-54	ERJ3GEYJ220	M.RESISTOR CH 1/16W 22	7	
R755-64	ERJ3GEYJ101	M.RESISTOR CH 1/16W 100	10	
R765,66	ERJ3GEYJ103	M.RESISTOR CH 1/16W 10K	2	
R767,68	ERJ3GEYJ101	M.RESISTOR CH 1/16W 100	2	
R769	ERJ3GEYG102	M.RESISTOR CH 1/16W 1K	1	
R770-77	ERJ3GEYJ220	M.RESISTOR CH 1/16W 22	8	
R800	ERJ3GEYJ101	M.RESISTOR CH 1/16W 100	1	
R801	ERJ3GEYJ221	M.RESISTOR CH 1/16W 220	1	
R802	ERJ3GEYJ220	M.RESISTOR CH 1/16W 22	1	
R803,04	ERJ3GEYJ103	M.RESISTOR CH 1/16W 10K	2	
R805	ERJ3GEYJ101	M.RESISTOR CH 1/16W 100	1	
R806,07	ERJ3GEYJ220	M.RESISTOR CH 1/16W 22	2	
R808	ERJ3GEYJ101	M.RESISTOR CH 1/16W 100	1	
R809-11	ERJ3GEYG102	M.RESISTOR CH 1/16W 1K	3	
R812	ERJ3GEYJ101	M.RESISTOR CH 1/16W 100	1	
R813,14	ERJ3GEYG102	M.RESISTOR CH 1/16W 1K	2	
R815-27	ERJ3GEYJ220	M.RESISTOR CH 1/16W 22	13	
R830,31	ERJ3GEYG102	M.RESISTOR CH 1/16W 1K	2	

Ref.No.	Part No.	Part Name & Description	Pcs	Remarks
R832	ERJ3GEYJ103	M.RESISTOR CH 1/16W 10K	1	
R833	ERJ3GEYG102	M.RESISTOR CH 1/16W 1K	1	
R834	ERJ3GEY0R00	M.RESISTOR CH 1/16W 0	1	
R835	ERJ3GEYG102	M.RESISTOR CH 1/16W 1K	1	
R836	ERJ3GEYJ103	M.RESISTOR CH 1/16W 10K	1	
R837	ERJ3GEY0R00	M.RESISTOR CH 1/16W 0	1	
R850	ERJ3GEY0R00	M.RESISTOR CH 1/16W 0	1	
R851	ERJ3GEYG102	M.RESISTOR CH 1/16W 1K	1	
R852	ERJ3GEYJ101	M.RESISTOR CH 1/16W 100	1	
R853	ERJ3RBD392	M.RESISTOR CH 1/16W 3.9K	1	
R854	ERJ3RBD331	M.RESISTOR CH 1/16W 330	1	
R855	ERJ3GEYJ220	M.RESISTOR CH 1/16W 22	1	
R856	ERJ3GEYJ221	M.RESISTOR CH 1/16W 220	1	
R857	ERJ3RBD102	M.RESISTOR CH 1/16W 1K	1	
R858	ERJ3GEYJ124	M.RESISTOR CH 1/16W 120K	1	
R859	ERJ3RBD271	M.RESISTOR CH 1/16W 270	1	
R860	ERJ3RED680	M.RESISTOR CH 1/16W 68	1	
R861	ERJ3GEYG102	M.RESISTOR CH 1/16W 1K	1	
R862,63	ERJ3GEYG332	M.RESISTOR CH 1/16W 3.3K	2	
R864	ERJ3GEYJ101	M.RESISTOR CH 1/16W 100	1	
R865	ERJ3GEYJ103	M.RESISTOR CH 1/16W 10K	1	
R866	ERJ3RBD821	M.RESISTOR CH 1/16W 820	1	
R867	ERJ3RBD751	M.RESISTOR CH 1/16W 750	1	
R868	ERJ3GEYJ222	M.RESISTOR CH 1/16W 2.2K	1	
R869,70	ERJ3RBD122	M.RESISTOR CH 1/16W 1.2K	2	
R871	ERJ3GEYG102	M.RESISTOR CH 1/16W 1K	1	
R872	ERJ3GEYJ105	M.RESISTOR CH 1/16W 1M	1	
R873	ERJ3GEYJ223	M.RESISTOR CH 1/16W 22K	1	
R874	ERJ3RBD102	M.RESISTOR CH 1/16W 1K	1	
R875,76	ERJ3GEYJ103	M.RESISTOR CH 1/16W 10K	2	
R877	ERJ3GEYJ222	M.RESISTOR CH 1/16W 2.2K	1	
R878	ERJ3GEYJ153	M.RESISTOR CH 1/16W 15K	1	
R879	ERJ3GEYJ101	M.RESISTOR CH 1/16W 100	1	
R880	ERJ3RBD102	M.RESISTOR CH 1/16W 1K	1	
R882	ERJ3GEYG471	M.RESISTOR CH 1/16W 470	1	
R883	ERJ3RBD102	M.RESISTOR CH 1/16W 1K	1	
R900-03	ERJ3GEYG102	M.RESISTOR CH 1/16W 1K	4	
R904,05	ERJ3GEYJ680	M.RESISTOR CH 1/16W 68	2	
R906,07	ERJ3GEYG102	M.RESISTOR CH 1/16W 1K	2	
R908-15	ERJ3GEYJ220	M.RESISTOR CH 1/16W 22	8	
R916-18	ERJ3GEYG102	M.RESISTOR CH 1/16W 1K	3	
R919-26	ERJ3GEYJ220	M.RESISTOR CH 1/16W 22	8	
R927,28	ERJ3GEYG102	M.RESISTOR CH 1/16W 1K	2	
R929-31	ERJ3GEYJ680	M.RESISTOR CH 1/16W 68	3	
R932,33	ERJ3GEYG102	M.RESISTOR CH 1/16W 1K	2	
R950-54	ERJ3GEYG102	M.RESISTOR CH 1/16W 1K	5	
R956	ERJ3GEYJ621	M.RESISTOR CH 1/16W 620	1	
R957	ERJ3GEYG332	M.RESISTOR CH 1/16W 3.3K	1	
R958-61	ERJ3GEYG472	M.RESISTOR CH 1/16W 4.7K	4	
R962	ERJ3GEYG102	M.RESISTOR CH 1/16W 1K	1	
R964	ERJ3GEYG102	M.RESISTOR CH 1/16W 1K	1	
R965,66	ERJ3GEYJ680	M.RESISTOR CH 1/16W 68	2	
R967-75	ERJ3GEYG472	M.RESISTOR CH 1/16W 4.7K	9	
R976	ERJ3GEYG102	M.RESISTOR CH 1/16W 1K	1	
R977,78	ERJ3GEYG472	M.RESISTOR CH 1/16W 4.7K	2	
SW100	VSS0367-02B	SWITCH	1	
SW430	VSS0367-04B	SWITCH	1	
SW500	VSS0367-02B	SWITCH	1	
SW600	VSS0367-04B	SWITCH	1	
SW950	VSS0367-02B	SWITCH	1	
TG1-G5	EYF6CU	TEST POINT	5	
TP100-07	EYF6CU	TEST POINT	8	
TP300,01	EYF6CU	TEST POINT	2	
TP500,01	EYF6CU	TEST POINT	2	
TP570-75	EYF6CU	TEST POINT	6	
TP600-03	EYF6CU	TEST POINT	4	
TP700-02	EYF6CU	TEST POINT	3	
TP800	EYF6CU	TEST POINT	1	
TP850	EYF6CU	TEST POINT	1	
X100	VSX0788	CRYSTAL OSCILLATOR	1	H1C2705B0006
X101	VSX0983	CRYSTAL OSCILLATOR	1	H1A2705B0007

Ref.No.	Part No.	Part Name & Description	Pcs	Remarks
X200	VSX1062	CRYSTAL OSCILLATOR	1	
X430	VSX0974	CRYSTAL OSCILLATOR	1	H0J245500010
X850	VSX0975	CRYSTAL OSCILLATOR	1	H1C2295B0001
X851	VSX0973	CRYSTAL OSCILLATOR	1	H1C1385B0001
		MISCELLANEOUS		
	VML2143	CARD PULLER	1	
	VML2144	CARD PULLER	1	
■ E4	VEP83494A	F5 VIDEO OUT P.C.BOARD	1	(RTL)
C3001-13	ECUX1E104ZFV	C.CAPACITOR CH 25V 0.1U	13	
C3014,15	ECUX1H103KBV	C.CAPACITOR CH 50V 0.01U	2	
C3016	ECUX1E104ZFV	C.CAPACITOR CH 25V 0.1U	1	
C3017	ECUX1H103KBV	C.CAPACITOR CH 50V 0.01U	1	
C3018,19	ECUX1E104ZFV	C.CAPACITOR CH 25V 0.1U	2	
C3020,21	ECUX1H103KBV	C.CAPACITOR CH 50V 0.01U	2	
C3022	ECUX1E104ZFV	C.CAPACITOR CH 25V 0.1U	1	
C3023	ECUX1H103KBV	C.CAPACITOR CH 50V 0.01U	1	
C3024	ECUX1E104ZFV	C.CAPACITOR CH 25V 0.1U	1	
C3025	ECUX1H103KBV	C.CAPACITOR CH 50V 0.01U	1	
C3026,27	ECUX1E104ZFV	C.CAPACITOR CH 25V 0.1U	2	
C3028	ECUX1H103KBV	C.CAPACITOR CH 50V 0.01U	1	
C3029	ECUX1E104ZFV	C.CAPACITOR CH 25V 0.1U	1	
C3030	ECUX1H103KBV	C.CAPACITOR CH 50V 0.01U	1	
C3031	ECUX1E104ZFV	C.CAPACITOR CH 25V 0.1U	1	
C3032	ECUX1H390JCV	C.CAPACITOR CH 50V 39P	1	
C3033	ECUX1H070DCV	C.CAPACITOR CH 50V 7P	1	ECUV1H070DCV
C3034	ECUX1E104ZFV	C.CAPACITOR CH 25V 0.1U	1	
C3035	ECEV1CV100Q	E.CAPACITOR CH 16V 10U	1	
C3038-44	ECUX1E104ZFV	C.CAPACITOR CH 25V 0.1U	7	
C3045	ECEV1CV100Q	E.CAPACITOR CH 16V 10U	1	
C3046-51	ECUX1E104ZFV	C.CAPACITOR CH 25V 0.1U	6	
C3052	EEVHB1C100	E.CAPACITOR 16V 10U	1	
C3053	ECUX1E104ZFV	C.CAPACITOR CH 25V 0.1U	1	
C3054	EEVHB1C100	E.CAPACITOR 16V 10U	1	
C3055-57	ECUX1E104ZFV	C.CAPACITOR CH 25V 0.1U	3	
C3058	ECUX1H100DCV	C.CAPACITOR CH 50V 10P	1	
C3059-61	ECUX1E104ZFV	C.CAPACITOR CH 25V 0.1U	3	
C3064-74	ECUX1E104ZFV	C.CAPACITOR CH 25V 0.1U	11	
C3076-81	ECUX1E104ZFV	C.CAPACITOR CH 25V 0.1U	6	
C3082	EEVHB1C100	E.CAPACITOR 16V 10U	1	
C3083	ECUX1E104ZFV	C.CAPACITOR CH 25V 0.1U	1	
C3084	ECEV0JV101Q	E.CAPACITOR CH6.3V 100U	1	
C3096	ECUX1E104ZFV	C.CAPACITOR CH 25V 0.1U	1	
C3097	EEVHB1C470	E.CAPACITOR 16V 47U	1	
C3098	ECUX1E104ZFV	C.CAPACITOR CH 25V 0.1U	1	
C3099	EEVHB1C470	E.CAPACITOR 16V 47U	1	
C3100	ECUX1E104ZFV	C.CAPACITOR CH 25V 0.1U	1	
C3101	EEVHB1C470	E.CAPACITOR 16V 47U	1	
C3103	ECUX1E104ZFV	C.CAPACITOR CH 25V 0.1U	1	
C3104	EEVHB1C100	E.CAPACITOR 16V 10U	1	
C3105	ECUX1E104ZFV	C.CAPACITOR CH 25V 0.1U	1	
C3106	EEVHB1C470	E.CAPACITOR 16V 47U	1	
C3107	ECEV1CV470Q	E.CAPACITOR CH 16V 47U	1	
C3108	ECUX1E104ZFV	C.CAPACITOR CH 25V 0.1U	1	
C3109	EEVHB1C470	E.CAPACITOR 16V 47U	1	
C3110	ECUX1E104ZFV	C.CAPACITOR CH 25V 0.1U	1	
C3111	EEVHB1C470	E.CAPACITOR 16V 47U	1	
C3112-17	ECUX1E104ZFV	C.CAPACITOR CH 25V 0.1U	6	
C3130	ECUX1E104ZFV	C.CAPACITOR CH 25V 0.1U	1	
C3134-36	ECUX1E104ZFV	C.CAPACITOR CH 25V 0.1U	3	
C3141-45	ECUX1E104ZFV	C.CAPACITOR CH 25V 0.1U	5	
C3146	ECUX1H100DCV	C.CAPACITOR CH 50V 10P	1	
C3147-58	ECUX1E104ZFV	C.CAPACITOR CH 25V 0.1U	12	
C3162,63	ECUX1E104ZFV	C.CAPACITOR CH 25V 0.1U	2	
C3175	EEVHB1C100	E.CAPACITOR 16V 10U	1	
C3176	ECUX1E104ZFV	C.CAPACITOR CH 25V 0.1U	1	
C3178	ECUX1E104ZFV	C.CAPACITOR CH 25V 0.1U	1	

Ref.No.	Part No.	Part Name & Description	Pcs	Remarks
C3181,82	ECUX1E104ZFV	C.CAPACITOR CH 25V 0.1U	2	
C3184,85	EEVHB1C100	E.CAPACITOR 16V 10U	2	
C3186	EEVHB1V100	E.CAPACITOR 35V 10U	1	
C3189	EEVHB1C470	E.CAPACITOR 16V 47U	1	
C3190,91	ECUX1E104ZFV	C.CAPACITOR CH 25V 0.1U	2	
C3192	EEVHB1C100	E.CAPACITOR 16V 10U	1	
C3193	ECUX1E104ZFV	C.CAPACITOR CH 25V 0.1U	1	
C3194	EEVHB1C100	E.CAPACITOR 16V 10U	1	
C3195,96	ECUX1E104ZFV	C.CAPACITOR CH 25V 0.1U	2	
C3197	EEVHB1C100	E.CAPACITOR 16V 10U	1	
C3198	ECUX1E104ZFV	C.CAPACITOR CH 25V 0.1U	1	
C3199	ECEV1EV330Q	E.CAPACITOR CH 25V 33U	1	
C3200-02	ECUX1E104ZFV	C.CAPACITOR CH 25V 0.1U	3	
C3203	ECEV1CV470Q	E.CAPACITOR CH 16V 47U	1	
C3204	EEVHB1E330P	E.CAPACITOR 25V 33U	1	
C3205	ECUX1E104ZFV	C.CAPACITOR CH 25V 0.1U	1	
C3206	EEVHB1C100	E.CAPACITOR 16V 10U	1	
C3207-12	ECUX1E104ZFV	C.CAPACITOR CH 25V 0.1U	6	
C3214	ECUX1H103KBV	C.CAPACITOR CH 50V 0.01U	1	
C3215-21	ECUX1E104ZFV	C.CAPACITOR CH 25V 0.1U	7	
C3222	EEVHP1H1R0	E.CAPACITOR 50V 1U	1	
C3223	EEVHB1C470	E.CAPACITOR 16V 47U	1	
C3224-36	ECUX1E104ZFV	C.CAPACITOR CH 25V 0.1U	13	
C3237	EEVHB1C100	E.CAPACITOR 16V 10U	1	
C3238	ECUX1E104ZFV	C.CAPACITOR CH 25V 0.1U	1	
C3239	ECUX1H102JV	C.CAPACITOR CH 50V 1000P	1	
C3240	ECUX1H150JCV	C.CAPACITOR CH 50V 15P	1	
C3241	ECUX1E104KBN	C.CAPACITOR CH 25V 0.1U	1	
C3246	ECUX1E104KBN	C.CAPACITOR CH 25V 0.1U	1	
C3247-49	ECUX1E104ZFV	C.CAPACITOR CH 25V 0.1U	3	
C3251	ECUX1E104ZFV	C.CAPACITOR CH 25V 0.1U	1	
C3252	EEVHP1H1R0	E.CAPACITOR 50V 1U	1	
C3253	ECUX1E104ZFV	C.CAPACITOR CH 25V 0.1U	1	
C3255,56	ECUX1H150JCV	C.CAPACITOR CH 50V 15P	2	
C3257-62	ECUX1E104ZFV	C.CAPACITOR CH 25V 0.1U	6	
C3263	ECUX1H103KBV	C.CAPACITOR CH 50V 0.01U	1	
C3264	ECUX1E104ZFV	C.CAPACITOR CH 25V 0.1U	1	
C3265	ECUX1H103KBV	C.CAPACITOR CH 50V 0.01U	1	
C3266	ECUX1E104ZFV	C.CAPACITOR CH 25V 0.1U	1	
C3267	ECUX1H102JV	C.CAPACITOR CH 50V 1000P	1	
C3268	ECUX1E104ZFV	C.CAPACITOR CH 25V 0.1U	1	
C3269	EEVHB1C470	E.CAPACITOR 16V 47U	1	
C3270	ECUX1E104ZFV	C.CAPACITOR CH 25V 0.1U	1	
C3271,72	ECUX1H101JCV	C.CAPACITOR CH 50V 100P	2	
C3273	ECUX1H220JCV	C.CAPACITOR CH 50V 22P	1	
C3274	ECUV1H470JCV	C.CAPACITOR CH 50V 47P	1	
C3275	ECUX1H390JCV	C.CAPACITOR CH 50V 39P	1	
C3276	EEVHB1C470	E.CAPACITOR 16V 47U	1	
C3277	ECUX1E104ZFV	C.CAPACITOR CH 25V 0.1U	1	
C3278,79	ECUX1H103KBV	C.CAPACITOR CH 50V 0.01U	2	
C3280	ECUX1H181JCV	C.CAPACITOR CH 50V 180P	1	
C3281	ECUX1H103KBV	C.CAPACITOR CH 50V 0.01U	1	
C3282	ECUX1E104ZFV	C.CAPACITOR CH 25V 0.1U	1	
C3283,84	EEVHB1C470	E.CAPACITOR 16V 47U	2	
C3286,87	ECUX1E104ZFV	C.CAPACITOR CH 25V 0.1U	2	
C3288	ECUX1H680JCV	C.CAPACITOR CH 50V 68P	1	
C3289	ECUX1H180JCV	C.CAPACITOR CH 50V 18P	1	
C3290	ECUX1E104ZFV	C.CAPACITOR CH 25V 0.1U	1	
C3291	ECUX1H330JCV	C.CAPACITOR CH 50V 33P	1	
C3296	ECUV1H470JCV	C.CAPACITOR CH 50V 47P	1	
C3297	ECUX1H330JCV	C.CAPACITOR CH 50V 33P	1	
C3298	ECUX1H103KBV	C.CAPACITOR CH 50V 0.01U	1	
C3299	ECEV1VAN2R2	E.CAPACITOR CH 35V 2.2U	1	
C3300,01	ECUX1E104ZFV	C.CAPACITOR CH 25V 0.1U	2	
C3302	EEVHB1C470	E.CAPACITOR 16V 47U	1	
C3303,04	ECUX1E104ZFV	C.CAPACITOR CH 25V 0.1U	2	
C3305	ECUX1H102JV	C.CAPACITOR CH 50V 1000P	1	
C3306	ECUX1E104ZFV	C.CAPACITOR CH 25V 0.1U	1	
C3307	EEVHB1C100	E.CAPACITOR 16V 10U	1	
C3308	ECUX1E104ZFV	C.CAPACITOR CH 25V 0.1U	1	
C3309	EEVHB1C470	E.CAPACITOR 16V 47U	1	
C3310	ECUX1H820JCV	C.CAPACITOR CH 50V 82P	1	
C3311	ECUX1E104ZFV	C.CAPACITOR CH 25V 0.1U	1	
C3312	ECUX1H103KBV	C.CAPACITOR CH 50V 0.01U	1	
C3315	ECUX1H103KBV	C.CAPACITOR CH 50V 0.01U	1	

Ref.No.	Part No.	Part Name & Description	Pcs	Remarks
C3316	ECUV1H470JCV	C.CAPACITOR CH 50V 47P	1	
C3317	ECUX1H390JCV	C.CAPACITOR CH 50V 39P	1	
C3318	ECUX1H102JV	C.CAPACITOR CH 50V 1000P	1	
C3319,20	ECUX1E104ZFV	C.CAPACITOR CH 25V 0.1U	2	
C3323-29	ECUX1E104ZFV	C.CAPACITOR CH 25V 0.1U	7	
C3332-35	ECUX1E104ZFV	C.CAPACITOR CH 25V 0.1U	4	
C3338	ECUX1E104ZFV	C.CAPACITOR CH 25V 0.1U	1	
C3339	ECUX1H271JCV	C.CAPACITOR CH 50V 270P	1	
C3340-47	ECUX1E104ZFV	C.CAPACITOR CH 25V 0.1U	8	
C3349	ECUX1E104ZFV	C.CAPACITOR CH 25V 0.1U	1	
C3351	ECUX1E104ZFV	C.CAPACITOR CH 25V 0.1U	1	
C3353	ECUX1E104ZFV	C.CAPACITOR CH 25V 0.1U	1	
C3358-71	ECUX1E104ZFV	C.CAPACITOR CH 25V 0.1U	14	
C3411	ECUX1H101JCV	C.CAPACITOR CH 50V 100P	1	
C3412	ECUX1H390JCV	C.CAPACITOR CH 50V 39P	1	
C3413	ECUX1E104ZFV	C.CAPACITOR CH 25V 0.1U	1	
C3415-17	ECUX1E104ZFV	C.CAPACITOR CH 25V 0.1U	3	
C3418	ECUX1H102JV	C.CAPACITOR CH 50V 1000P	1	
C3419	ECUX1H150JCV	C.CAPACITOR CH 50V 15P	1	
C3420-22	ECUX1E104ZFV	C.CAPACITOR CH 25V 0.1U	3	
C3425-27	ECUX1E104ZFV	C.CAPACITOR CH 25V 0.1U	3	
C3428	ECUX1H330JCV	C.CAPACITOR CH 50V 33P	1	
C3431	EEVHB1C100	E.CAPACITOR 16V 10U	1	
C3432	ECUX1E104ZFV	C.CAPACITOR CH 25V 0.1U	1	
C3433	EEVHB1C470	E.CAPACITOR 16V 47U	1	
C3434	ECUX1E104ZFV	C.CAPACITOR CH 25V 0.1U	1	
C3435	EEVHB1C100	E.CAPACITOR 16V 10U	1	
C3436,37	ECUX1E104ZFV	C.CAPACITOR CH 25V 0.1U	2	
C3438	EEVHB1C100	E.CAPACITOR 16V 10U	1	
C3439	ECUX1E104ZFV	C.CAPACITOR CH 25V 0.1U	1	
C3440,41	ECUX1E104KBN	C.CAPACITOR CH 25V 0.1U	2	
C3442	ECUX1E104ZFV	C.CAPACITOR CH 25V 0.1U	1	
C3443	ECUX1H103KBV	C.CAPACITOR CH 50V 0.01U	1	
C3444,45	ECUX1E104ZFV	C.CAPACITOR CH 25V 0.1U	2	
C3446,47	ECUX1H103KBV	C.CAPACITOR CH 50V 0.01U	2	
C3448-51	ECUX1E104ZFV	C.CAPACITOR CH 25V 0.1U	4	
C3455	ECUX1E104ZFV	C.CAPACITOR CH 25V 0.1U	1	
C3458	ECUX1H070DCV	C.CAPACITOR CH 50V 7P	1	ECUV1H070DCV
C3459	ECUX1E104ZFV	C.CAPACITOR CH 25V 0.1U	1	
C3460	ECUM1C104KBN	C.CAPACITOR CH 16V 0.1U	1	
C3461	ECST1CY335Z	T.CAPACITOR CH 16V 3.3U	1	
C3462	ECUX1E104ZFV	C.CAPACITOR CH 25V 0.1U	1	
C3463	EEVHB1C100	E.CAPACITOR 16V 10U	1	
C3464	ECUX1E104ZFV	C.CAPACITOR CH 25V 0.1U	1	
C3465	ECUX1H103KBV	C.CAPACITOR CH 50V 0.01U	1	
C3466	ECUX1E104ZFV	C.CAPACITOR CH 25V 0.1U	1	
C3467	ECUX1H103KBV	C.CAPACITOR CH 50V 0.01U	1	
C3468	ECUX1E104ZFV	C.CAPACITOR CH 25V 0.1U	1	
C3469	ECUX1H103KBV	C.CAPACITOR CH 50V 0.01U	1	
C3480-83	ECUX1E104ZFV	C.CAPACITOR CH 25V 0.1U	4	
C3485-89	ECUX1E104ZFV	C.CAPACITOR CH 25V 0.1U	5	
C3491-93	ECUX1E104ZFV	C.CAPACITOR CH 25V 0.1U	3	
C3495	ECUX1E104ZFV	C.CAPACITOR CH 25V 0.1U	1	
C3497	ECUX1E104ZFV	C.CAPACITOR CH 25V 0.1U	1	
C3498	ECUX1E104KBN	C.CAPACITOR CH 25V 0.1U	1	
C3499	ECUX1E104ZFV	C.CAPACITOR CH 25V 0.1U	1	
C3500	ECUX1E104KBN	C.CAPACITOR CH 25V 0.1U	1	
C3501-03	ECUX1E104ZFV	C.CAPACITOR CH 25V 0.1U	3	
C3504,05	ECEV0JN470Q	E.CAPACITOR CH6.3V 47U	2	
C3506	ECEV1CV100Q	E.CAPACITOR CH 16V 10U	1	
C3507-10	ECUX1E104ZFV	C.CAPACITOR CH 25V 0.1U	4	
C3511	EEVHB1C100	E.CAPACITOR 16V 10U	1	
C3512	ECUX1E104ZFV	C.CAPACITOR CH 25V 0.1U	1	
C3513	ECUX1H100DCV	C.CAPACITOR CH 50V 10P	1	
C3514	ECUX1E104ZFV	C.CAPACITOR CH 25V 0.1U	1	
C3516-19	ECUX1E104ZFV	C.CAPACITOR CH 25V 0.1U	4	
C3522-25	ECUX1E104ZFV	C.CAPACITOR CH 25V 0.1U	4	
C3526	EEVHB1C100	E.CAPACITOR 16V 10U	1	
C3527,28	ECUX1E104ZFV	C.CAPACITOR CH 25V 0.1U	2	
C3529	ECEV1CV100Q	E.CAPACITOR CH 16V 10U	1	
C3530-33	ECUX1E104ZFV	C.CAPACITOR CH 25V 0.1U	4	
C3534	ECEV1CV100Q	E.CAPACITOR CH 16V 10U	1	
C3535-37	ECUX1E104ZFV	C.CAPACITOR CH 25V 0.1U	3	
C3538	EEVHB1C100	E.CAPACITOR 16V 10U	1	
C3539	ECUX1E104ZFV	C.CAPACITOR CH 25V 0.1U	1	

Ref.No.	Part No.	Part Name & Description	Pcs	Remarks
C3540	EEVHB1C100	E.CAPACITOR 16V 10U	1	
C3541-43	ECUX1E104ZFV	C.CAPACITOR CH 25V 0.1U	3	
C3544	ECUX1H471JCV	C.CAPACITOR CH 50V 470P	1	
C3545	ECUX1H331JCV	C.CAPACITOR CH 50V 330P	1	
C3546	ECUX1H560JCV	C.CAPACITOR CH 50V 56P	1	
C3547-61	ECUX1E104ZFV	C.CAPACITOR CH 25V 0.1U	15	
C3563-70	ECUX1E104ZFV	C.CAPACITOR CH 25V 0.1U	8	
D3001,02	MA152K	DIODE	2	
D3003	MA142WK	DIODE	1	
D3004	MA142K	DIODE	1	
D3005	MA335-R	DIODE	1	
D3006	MA142K	DIODE	1	
D3007	MA335-R	DIODE	1	
D3010	MA28WA	DIODE	1	
D3011,12	MA701A	DIODE	2	
FL3013	VLF1482	FILTER	1	J0E7004A0006
IC3001	SN74AS240ANS	IC	1	
IC3002-08	TVHT244FT	IC	7	
IC3009,10	NVHC244F	IC	2	
IC3011	C1AB00001301	IC	1	
IC3012,13	AD9300KP	IC	2	
IC3014	TC7S04F	IC	1	C0JBAB000169
IC3015	AD9300KP	IC	1	
IC3016	AD828AR	IC	1	
IC3017	ADV7171KS	IC	1	C0ZBZ0000175
IC3018	MC10H125M	IC	1	
IC3019	TLCX574FT	IC	1	
IC3020-22	NVHC574FT	IC	3	
IC3025	TVHT244FT	IC	1	
IC3026	NVHC574FT	IC	1	
IC3027	TVHT244FT	IC	1	
IC3028	MC10H124M	IC	1	C0JBZZ000020
IC3029,30	TVHT541FT	IC	2	
IC3031,32	NVHC244F	IC	2	
IC3036	LT1086CM	IC	1	C0CBAYG00001
IC3049	NVHC244F	IC	1	
IC3057	SN74ALS04BNS	IC	1	
IC3061	TVHT574FT	IC	1	
IC3063-65	TVHT574FT	IC	3	
IC3072	MB87D132	IC	1	C1ZBZ0001516
IC3074,75	UPD485506G25	IC	2	C3HBDG000005
IC3076	UPD65944G020	IC	1	
IC3081,82	TC74ACT374F	IC	2	C0JBAF000132
IC3087	NJM78L09UA	IC	1	C0CBAHC00002
IC3088	NJM78L05UA	IC	1	C0CBADC00010
IC3089	NJM79L05UA	IC	1	
IC3090	AN78N05	IC	1	
IC3091	AN78N10	IC	1	
IC3092	AN79N10	IC	1	
IC3093-95	TVHT244FT	IC	3	
IC3096	TC74ACT374F	IC	1	C0JBAF000132
IC3098	TC74ACT374F	IC	1	C0JBAF000132
IC3099	TVHC125FT	IC	1	
IC3100	74F08SJ	IC	1	
IC3101	SN74AS74ANS	IC	1	
IC3102	TVHT244FT	IC	1	
IC3103	TVHC240FT	IC	1	
IC3104	NJM082BM	IC	1	C0ABEB000017
IC3105	UPD65650J203	IC	1	C1ZBZ0001380
IC3106	SN74LS221NS	IC	1	
IC3107	TVHC04FT	IC	1	
IC3108	TVHC257FT	IC	1	
IC3109	AN91A12S	IC	1	
IC3110	NE521D	IC	1	C0BBBB000013
IC3111-13	MM74HC221AM	IC	3	C0JBAM000078
IC3115	TVHC04FT	IC	1	
IC3116	NJM082BM	IC	1	C0ABEB000017
IC3117	NVHC74FT	IC	1	
IC3119	SN74LS123NS	IC	1	
IC3120	NE521D	IC	1	C0BBBB000013
IC3121	NJM082BM	IC	1	C0ABEB000017
IC3122	TC4W53FU	IC	1	

Ref.No.	Part No.	Part Name & Description	Pcs	Remarks
IC3124	THC4053FT	IC	1	
IC3126	TC7SH08FU	IC	1	
IC3127	TC7SH00FU	IC	1	
IC3130-32	UPD485506G25	IC	3	C3HBDG000005
IC3134,35	SN74S1051NS	IC	2	
IC3136	74ALS541SJ	IC	1	
IC3137	74ALS245ASJ	IC	1	
IC3138,39	74ALS541SJ	IC	2	
IC3141	UPD71055GB	IC	1	
IC3144	UPD71055GB	IC	1	
IC3146	TVHT244FT	IC	1	
IC3149	TVHT244FT	IC	1	
IC3150	NVHC244F	IC	1	
IC3152	NVHC244F	IC	1	
IC3153	TVHC240FT	IC	1	
IC3154	MS51V8221-3G	IC	1	
IC3156	MS51V8221-3G	IC	1	
IC3157,58	NVHC244F	IC	2	
IC3159	T160G70-1601	IC	1	
IC3161,62	SN74S1051NS	IC	2	
IC3164,65	MS51V8221-3G	IC	2	
IC3170	MM74HC221AM	IC	1	C0JBAM000078
IC3172	TVHC157FT	IC	1	
IC3173,74	TC7SH08FU	IC	2	
IC3175	SN74LS221NS	IC	1	
IC3176	TVHC240FT	IC	1	
IC3177	TC4W53FU	IC	1	
IC3178	THC4053FT	IC	1	
IC3179	NJM79L09UA	IC	1	C0CABBF00001
IC3180-82	TVHC574FT	IC	3	
IC3183	DAC10GS	IC	1	
IC3184	NJM082BM	IC	1	C0ABEB000017
IC3185	TC4W53FU	IC	1	
IC3186	ADV7171KS	IC	1	C0ZBZ0000175
IC3187	AD9300KP	IC	1	
IC3189	UPD485506G25	IC	1	C3HBDG000005
IC3190	UPD65013F101	IC	1	C1ZBZ0001326
IC3191,92	UG10358B	IC	2	C1ZBZ0000700
IC3194	UG10358B	IC	1	C1ZBZ0000700
IC3195	NVHC244F	IC	1	
IC3197	UPD65042F024	IC	1	
IC3199	S80745AND9	IC	1	
IC3200	NE521D	IC	1	C0BBBB000013
IC3201	AN78N05	IC	1	
IC3202	MS518222-3G	IC	1	
IC3203	NVHC244F	IC	1	
IC3204	UPD71055GB	IC	1	
IC3205	ADV7171KS	IC	1	C0ZBZ0000175
IC3206	AN78N05	IC	1	
IC3207	TC7SH00FU	IC	1	
IC3208,09	TC7SH08FU	IC	2	
IC3210	TC4W53FU	IC	1	
ID0	VVVS13297C	IC	1	
IP3034	EPM7256AE101	IC	1	C1ZBZ0001566
IP3050	EPM7128AE101	IC	1	C1ZBZ0001564
IP3073	EPM7128AE101	IC	1	C1ZBZ0001564
IP3140	EPM7032AE441	IC	1	
IP3145	EPM7256AE101	IC	1	C1ZBZ0001566
IP3160	EPM7128AE101	IC	1	C1ZBZ0001564
IP3163	EPM7128AE101	IC	1	C1ZBZ0001564
IP3193	EPM7128AE101	IC	1	C1ZBZ0001564
L3001	VLQ0163J180	COIL 18UH	1	G1C180J00001
L3002	VLQ0163J5R6	COIL 5.6UH	1	
L3003,04	VLQ0163J220	COIL 22UH	2	
L3008	VLP0133	COIL	1	
L3009	VLQ0163J220	COIL 22UH	1	
L3010	VLQ0319K470	COIL 47UH	1	G1C470K00013
L3011	VLQ0319K680	COIL 68UH	1	G1C680KA0002
L3012	VLQ0319K221	COIL 220UH	1	G1C221K00010
L3013	VLQ0319K101	COIL 100UH	1	G1C101K00022
L3014,15	VLQ0319K470	COIL 47UH	2	G1C470K00013
L3016	VLQ0163J221	COIL 220UH	1	G1C221J00003

Ref.No.	Part No.	Part Name & Description	Pcs	Remarks
L3026	VLQ0319K390	COIL 39UH	1	G1C390KA0002
L3027,28	VLQ0163J220	COIL 22UH	2	
L3030-37	VLP0133	COIL	8	
L3038	VLQ0163J2R7	COIL 2.7UH	1	G1C2R7J00002
L3039,40	VLQ0163J5R6	COIL 5.6UH	2	
L3041,42	VLQ0163J220	COIL 22UH	2	
L3043	VLQ0163J1R0	COIL 1UH	1	G1C1R0J00008
L3044	VLQ0163J2R7	COIL 2.7UH	1	G1C2R7J00002
L3045	VLQ0163JR68	COIL 0.68UH	1	G1CR68J00004
L3046,47	VLQ0163J270	COIL 27UH	2	
P3001,02	VJP3454B096	CONNECTOR (MALE)	2	K1KA96B00021
P3003	VJP3515A080	CONNECTOR (MALE)	1	
P3004	VJP3515A052	CONNECTOR (MALE)	1	K1KA52A00013
P3006	VJP3125B008	CONNECTOR (MALE)	1	
Q3001,02	2SD601A	TRANSISTOR	2	
Q3003	2SB709A	TRANSISTOR	1	
Q3004,05	2SK608	TRANSISTOR	2	
Q3006	2SB709A	TRANSISTOR	1	
Q3007,08	2SK608	TRANSISTOR	2	
Q3009	2SD601A	TRANSISTOR	1	
Q3011	UN2213	TRANSISTOR-RESISTOR	1	
Q3013	2SK1059-Z	TRANSISTOR	1	
Q3014	HAT1026R	TRANSISTOR	1	
Q3015	2SB709A	TRANSISTOR	1	
Q3016,17	2SD601A	TRANSISTOR	2	
R3001-05	ERJ3GEYG102	M.RESISTOR CH 1/16W 1K	5	
R3006-23	ERJ3GEYJ220	M.RESISTOR CH 1/16W 22	18	
R3024	ERJ3GEYJ101	M.RESISTOR CH 1/16W 100	1	
R3025-31	ERJ3GEYJ220	M.RESISTOR CH 1/16W 22	7	
R3032-34	ERJ3GEYG102	M.RESISTOR CH 1/16W 1K	3	
R3035	ERJ3GEY0R00	M.RESISTOR CH 1/16W 0	1	
R3038,39	ERJ3GEYG102	M.RESISTOR CH 1/16W 1K	2	
R3040-43	ERJ3GEYJ220	M.RESISTOR CH 1/16W 22	4	
R3044	ERJ3GEYJ101	M.RESISTOR CH 1/16W 100	1	
R3045-49	ERJ3GEYJ220	M.RESISTOR CH 1/16W 22	5	
R3050	ERJ3GEYJ101	M.RESISTOR CH 1/16W 100	1	
R3051-57	ERJ3GEYJ220	M.RESISTOR CH 1/16W 22	7	
R3058,59	ERJ3GEYJ470	M.RESISTOR CH 1/16W 47	2	
R3060	ERJ3GEYJ270	M.RESISTOR CH 1/16W 27	1	
R3061	ERJ3GEYJ470	M.RESISTOR CH 1/16W 47	1	
R3062	ERJ3GEYJ270	M.RESISTOR CH 1/16W 27	1	
R3063-69	ERJ3GEYJ470	M.RESISTOR CH 1/16W 47	7	
R3070	ERJ3GEYJ681	M.RESISTOR CH 1/16W 680	1	
R3071	ERJ3GEYJ821	M.RESISTOR CH 1/16W 820	1	
R3072	ERJ3GEYJ511	M.RESISTOR CH 1/16W 510	1	
R3073	ERJ6RBD152	M.RESISTOR CH 1/10W 1.5K	1	
R3074	ERJ6RED560	M.RESISTOR CH 1/10W 56	1	
R3075	ERJ6RBD681	M.RESISTOR CH 1/10W 680	1	
R3076	ERJ6RBD152	M.RESISTOR CH 1/10W 1.5K	1	
R3077	ERJ6RBD122	M.RESISTOR CH 1/10W 1.2K	1	
R3079	ERJ6RBD151	M.RESISTOR CH 1/10W 150	1	
R3080	ERJ6RED750	M.RESISTOR CH 1/10W 75	1	
R3082	ERJ6RBD102	M.RESISTOR CH 1/10W 1K	1	
R3084	ERJ6RBD102	M.RESISTOR CH 1/10W 1K	1	
R3085	ERJ6RBD151	M.RESISTOR CH 1/10W 150	1	
R3086	ERJ3GEYJ222	M.RESISTOR CH 1/16W 2.2K	1	
R3087	ERJ6RED750	M.RESISTOR CH 1/10W 75	1	
R3088	ERJ3GEYJ101	M.RESISTOR CH 1/16W 100	1	
R3089	ERJ3GEYJ470	M.RESISTOR CH 1/16W 47	1	
R3090	ERJ3GEY0R00	M.RESISTOR CH 1/16W 0	1	
R3093-00	ERJ3GEYJ331	M.RESISTOR CH 1/16W 330	8	
R3109,10	ERJ3GEYG102	M.RESISTOR CH 1/16W 1K	2	
R3111	ERJ3GEYJ153	M.RESISTOR CH 1/16W 15K	1	
R3112	ERJ3GEYJ103	M.RESISTOR CH 1/16W 10K	1	
R3113	ERJ3GEY0R00	M.RESISTOR CH 1/16W 0	1	
R3114,15	ERJ3GEYG102	M.RESISTOR CH 1/16W 1K	2	
R3119	ERJ3GEYG102	M.RESISTOR CH 1/16W 1K	1	
R3121,22	ERJ3GEYJ101	M.RESISTOR CH 1/16W 100	2	
R3123	ERJ3GEYG102	M.RESISTOR CH 1/16W 1K	1	
R3125,26	ERJ3GEYJ560	M.RESISTOR CH 1/16W 56	2	
R3127	ERJ3GEY0R00	M.RESISTOR CH 1/16W 0	1	
R3132	ERJ3GEYJ560	M.RESISTOR CH 1/16W 56	1	

Ref.No.	Part No.	Part Name & Description	Pcs	Remarks
R3133	ERJ3GEYJ681	M.RESISTOR CH 1/16W 680	1	
R3134,35	ERJ3GEYJ560	M.RESISTOR CH 1/16W 56	2	
R3136	ERJ3GEYJ681	M.RESISTOR CH 1/16W 680	1	
R3137-42	ERJ3GEYJ560	M.RESISTOR CH 1/16W 56	6	
R3144-53	ERJ3GEYJ220	M.RESISTOR CH 1/16W 22	10	
R3154	ERJ3GEYG102	M.RESISTOR CH 1/16W 1K	1	
R3155,56	ERJ3GEYJ220	M.RESISTOR CH 1/16W 22	2	
R3167-70	ERJ3GEYJ560	M.RESISTOR CH 1/16W 56	4	
R3171,72	ERJ3GEYG102	M.RESISTOR CH 1/16W 1K	2	
R3173,74	ERJ3GEYJ330	M.RESISTOR CH 1/16W 33	2	
R3175-77	ERJ3GEYJ101	M.RESISTOR CH 1/16W 100	3	
R3178	ERJ3GEY0R00	M.RESISTOR CH 1/16W 0	1	
R3179	ERJ3GEYJ333	M.RESISTOR CH 1/16W 33K	1	
R3180	ERJ3GEYJ222	M.RESISTOR CH 1/16W 2.2K	1	
R3181	ERJ3GEYJ470	M.RESISTOR CH 1/16W 47	1	
R3182	ERJ3GEYJ223	M.RESISTOR CH 1/16W 22K	1	
R3183	ERJ3GEYJ823	M.RESISTOR CH 1/16W 82K	1	
R3184	ERJ3GEYJ684	M.RESISTOR CH 1/16W 680K	1	
R3185	ERJ3GEYG102	M.RESISTOR CH 1/16W 1K	1	
R3186	ERJ3RBD121	M.RESISTOR CH 1/16W 120	1	
R3187	ERJ3RBD391	M.RESISTOR CH 1/16W 390	1	
R3189	ERJ3RBD391	M.RESISTOR CH 1/16W 390	1	
R3203	ERJ3GEYG102	M.RESISTOR CH 1/16W 1K	1	
R3204	ERJ3GEYJ512	M.RESISTOR CH 1/16W 5.1K	1	
R3205,06	ERJ3GEYG102	M.RESISTOR CH 1/16W 1K	2	
R3207	ERJ3GEYJ512	M.RESISTOR CH 1/16W 5.1K	1	
R3208,09	ERJ3GEYG102	M.RESISTOR CH 1/16W 1K	2	
R3211	ERJ3GEY0R00	M.RESISTOR CH 1/16W 0	1	
R3212-14	ERJ3GEYG102	M.RESISTOR CH 1/16W 1K	3	
R3241	ERJ3GEYG102	M.RESISTOR CH 1/16W 1K	1	
R3242	ERJ3GEY0R00	M.RESISTOR CH 1/16W 0	1	
R3244-46	ERJ3GEYG102	M.RESISTOR CH 1/16W 1K	3	
R3258-65	ERJ3GEY0R00	M.RESISTOR CH 1/16W 0	8	
R3266	ERJ3GEYJ101	M.RESISTOR CH 1/16W 100	1	
R3269,70	ERJ3GEYG102	M.RESISTOR CH 1/16W 1K	2	
R3272	ERJ3GEYG102	M.RESISTOR CH 1/16W 1K	1	
R3277	ERJ3GEYG102	M.RESISTOR CH 1/16W 1K	1	
R3280-89	ERJ3GEYG102	M.RESISTOR CH 1/16W 1K	10	
R3308	ERJ3GEYG102	M.RESISTOR CH 1/16W 1K	1	
R3309	ERJ3GEYJ103	M.RESISTOR CH 1/16W 10K	1	
R3310-13	ERJ3GEYJ220	M.RESISTOR CH 1/16W 22	4	
R3315	ERJ3GEYJ220	M.RESISTOR CH 1/16W 22	1	
R3316	ERJ3GEYG102	M.RESISTOR CH 1/16W 1K	1	
R3318	ERJ3GEYJ473	M.RESISTOR CH 1/16W 47K	1	
R3319	ERJ3GEYG471	M.RESISTOR CH 1/16W 470	1	
R3320	ERJ3GEYJ101	M.RESISTOR CH 1/16W 100	1	
R3321	ERJ3GEYG102	M.RESISTOR CH 1/16W 1K	1	
R3322	ERJ3GEYJ101	M.RESISTOR CH 1/16W 100	1	
R3323	ERJ3GEYG102	M.RESISTOR CH 1/16W 1K	1	
R3324	ERJ3GEYJ105	M.RESISTOR CH 1/16W 1M	1	
R3326	ERJ3GEYG102	M.RESISTOR CH 1/16W 1K	1	
R3327	ERJ3GEYJ104	M.RESISTOR CH 1/16W 100K	1	
R3328-31	ERJ3GEY0R00	M.RESISTOR CH 1/16W 0	4	
R3337,38	ERJ3GEY0R00	M.RESISTOR CH 1/16W 0	2	
R3341,42	ERJ3GEY0R00	M.RESISTOR CH 1/16W 0	2	
R3343	ERJ3GEYG472	M.RESISTOR CH 1/16W 4.7K	1	
R3344	ERJ3GEYG682	M.RESISTOR CH 1/16W 6.8K	1	
R3345	ERJ3GEYJ563	M.RESISTOR CH 1/16W 56K	1	
R3346	ERJ3GEYJ223	M.RESISTOR CH 1/16W 22K	1	
R3348	ERJ3GEY0R00	M.RESISTOR CH 1/16W 0	1	
R3349	ERJ3GEYJ101	M.RESISTOR CH 1/16W 100	1	
R3350	ERJ3GEYJ223	M.RESISTOR CH 1/16W 22K	1	
R3352,53	ERJ3RBD103	M.RESISTOR CH 1/16W 10K	2	
R3354,55	ERJ3GEYG102	M.RESISTOR CH 1/16W 1K	2	
R3356	ERJ3GEYJ473	M.RESISTOR CH 1/16W 47K	1	
R3357	ERJ3GEYG332	M.RESISTOR CH 1/16W 3.3K	1	
R3358	ERJ3GEYJ105	M.RESISTOR CH 1/16W 1M	1	
R3359	ERJ3GEYJ103	M.RESISTOR CH 1/16W 10K	1	
R3360	ERJ3GEYG471	M.RESISTOR CH 1/16W 470	1	
R3361	ERJ3GEYG102	M.RESISTOR CH 1/16W 1K	1	
R3362,63	ERJ3GEYJ222	M.RESISTOR CH 1/16W 2.2K	2	
R3364	ERJ3GEYJ683	M.RESISTOR CH 1/16W 68K	1	
R3365	ERJ3GEYJ223	M.RESISTOR CH 1/16W 22K	1	
R3366	ERJ3GEYG152	M.RESISTOR CH 1/16W 1.5K	1	
R3367	ERJ3GEYG822	M.RESISTOR CH 1/16W 8.2K	1	

Ref.No.	Part No.	Part Name & Description	Pcs	Remarks
R3368	ERJ3GEYJ393	M.RESISTOR CH 1/16W 39K	1	
R3369	ERJ3GEYJ272	M.RESISTOR CH 1/16W 2.7K	1	
R3370	ERJ3GEYJ684	M.RESISTOR CH 1/16W 680K	1	
R3371	ERJ3GEYJ103	M.RESISTOR CH 1/16W 10K	1	
R3372,73	ERJ3GEYG822	M.RESISTOR CH 1/16W 8.2K	2	
R3374	ERJ3GEYG152	M.RESISTOR CH 1/16W 1.5K	1	
R3376,77	ERJ3GEYJ222	M.RESISTOR CH 1/16W 2.2K	2	
R3379	ERJ3GEYJ184	M.RESISTOR CH 1/16W 180K	1	
R3380	ERJ3GEYJ224	M.RESISTOR CH 1/16W 220K	1	
R3389	ERJ3GEYG102	M.RESISTOR CH 1/16W 1K	1	
R3393,94	ERJ3GEYJ473	M.RESISTOR CH 1/16W 47K	2	
R3395,96	ERJ3GEYG332	M.RESISTOR CH 1/16W 3.3K	2	
R3397	ERJ3GEYG102	M.RESISTOR CH 1/16W 1K	1	
R3398	ERJ3GEYJ223	M.RESISTOR CH 1/16W 22K	1	
R3399	ERJ3GEYJ103	M.RESISTOR CH 1/16W 10K	1	
R3400	ERJ3GEYJ123	M.RESISTOR CH 1/16W 12K	1	
R3401	ERJ3GEYG102	M.RESISTOR CH 1/16W 1K	1	
R3402	ERJ3GEYJ473	M.RESISTOR CH 1/16W 47K	1	
R3403	ERJ3GEYG822	M.RESISTOR CH 1/16W 8.2K	1	
R3404	ERJ3GEYJ153	M.RESISTOR CH 1/16W 15K	1	
R3407	ERJ3GEYG152	M.RESISTOR CH 1/16W 1.5K	1	
R3408	ERJ3GEYJ222	M.RESISTOR CH 1/16W 2.2K	1	
R3409	ERJ3GEYJ153	M.RESISTOR CH 1/16W 15K	1	
R3410	ERJ3GEYJ273	M.RESISTOR CH 1/16W 27K	1	
R3411	ERJ3GEYJ105	M.RESISTOR CH 1/16W 1M	1	
R3412	ERJ3GEYG102	M.RESISTOR CH 1/16W 1K	1	
R3414	ERJ3GEYJ473	M.RESISTOR CH 1/16W 47K	1	
R3415	ERJ3GEYG102	M.RESISTOR CH 1/16W 1K	1	
R3416	ERJ3GEYG332	M.RESISTOR CH 1/16W 3.3K	1	
R3417,18	ERJ3GEYJ473	M.RESISTOR CH 1/16W 47K	2	
R3419	ERJ3GEYG332	M.RESISTOR CH 1/16W 3.3K	1	
R3420	ERJ3GEYJ153	M.RESISTOR CH 1/16W 15K	1	
R3421	ERJ3GEYG822	M.RESISTOR CH 1/16W 8.2K	1	
R3422,23	ERJ3GEYG102	M.RESISTOR CH 1/16W 1K	2	
R3424,25	ERJ3GEY0R00	M.RESISTOR CH 1/16W 0	2	
R3426,27	ERJ3GEYG102	M.RESISTOR CH 1/16W 1K	2	
R3429-31	ERJ3GEYG471	M.RESISTOR CH 1/16W 470	3	
R3432	ERJ3GEYG102	M.RESISTOR CH 1/16W 1K	1	
R3435	ERJ3GEYJ101	M.RESISTOR CH 1/16W 100	1	
R3438	ERJ3GEYG471	M.RESISTOR CH 1/16W 470	1	
R3445,46	ERJ3GEYG102	M.RESISTOR CH 1/16W 1K	2	
R3454	ERJ3GEYJ103	M.RESISTOR CH 1/16W 10K	1	
R3455	ERJ3GEYG102	M.RESISTOR CH 1/16W 1K	1	
R3459	ERJ3GEYJ101	M.RESISTOR CH 1/16W 100	1	
R3460,61	ERJ3GEY0R00	M.RESISTOR CH 1/16W 0	2	
R3462	ERJ3GEYG102	M.RESISTOR CH 1/16W 1K	1	
R3465,66	ERJ3GEYG102	M.RESISTOR CH 1/16W 1K	2	
R3468-89	ERJ3GEYJ103	M.RESISTOR CH 1/16W 10K	22	
R3490-92	ERJ3GEYG102	M.RESISTOR CH 1/16W 1K	3	
R3525	ERJ3GEYJ223	M.RESISTOR CH 1/16W 22K	1	
R3526	ERJ3GEYJ272	M.RESISTOR CH 1/16W 2.7K	1	
R3527	ERJ3GEYG102	M.RESISTOR CH 1/16W 1K	1	
R3528	ERJ3GEYJ563	M.RESISTOR CH 1/16W 56K	1	
R3529	ERJ3GEYG472	M.RESISTOR CH 1/16W 4.7K	1	
R3530	ERJ3GEYG682	M.RESISTOR CH 1/16W 6.8K	1	
R3531	ERJ3GEYG102	M.RESISTOR CH 1/16W 1K	1	
R3536	ERJ3GEYJ220	M.RESISTOR CH 1/16W 22	1	
R3537,38	ERJ3GEYJ103	M.RESISTOR CH 1/16W 10K	2	
R3541	ERJ3GEYJ220	M.RESISTOR CH 1/16W 22	1	
R3544,45	ERJ3GEYG102	M.RESISTOR CH 1/16W 1K	2	
R3546,47	ERJ3GEYG472	M.RESISTOR CH 1/16W 4.7K	2	
R3548	ERJ3GEYJ681	M.RESISTOR CH 1/16W 680	1	
R3549	ERJ3GEYJ333	M.RESISTOR CH 1/16W 33K	1	
R3551	ERJ3GEYJ333	M.RESISTOR CH 1/16W 33K	1	
R3552	ERJ3GEYG102	M.RESISTOR CH 1/16W 1K	1	
R3553	ERJ3RBD104	M.RESISTOR CH 1/16W 100K	1	
R3554	ERJ3RBD823	M.RESISTOR CH 1/16W 82K	1	
R3556	ERJ3RBD332	M.RESISTOR CH 1/16W 3.3K	1	
R3557	ERJ3GEYJ103	M.RESISTOR CH 1/16W 10K	1	
R3558	ERJ3RBD223	M.RESISTOR CH 1/16W 22K	1	
R3559,60	ERJ3GEYJ560	M.RESISTOR CH 1/16W 56	2	
R3561	ERJ3GEY0R00	M.RESISTOR CH 1/16W 0	1	
R3564	ERJ3GEY0R00	M.RESISTOR CH 1/16W 0	1	
R3565,66	ERJ3GEYJ750	M.RESISTOR CH 1/16W 75	2	
R3567	ERJ3GEYJ222	M.RESISTOR CH 1/16W 2.2K	1	

Ref.No.	Part No.	Part Name & Description	Pcs	Remarks
R3568	ERJ3GEYJ681	M.RESISTOR CH 1/16W 680	1	
R3569-74	ERJ3GEYJ103	M.RESISTOR CH 1/16W 10K	6	
R3576	ERJ3GEY0R00	M.RESISTOR CH 1/16W 0	1	
R3577	ERJ6RBD101	M.RESISTOR CH 1/10W 100	1	
R3578	ERJ6RED510	M.RESISTOR CH 1/10W 51	1	
R3584	ERJ3GEYG102	M.RESISTOR CH 1/16W 1K	1	
R3587	ERJ6GEYG222	M.RESISTOR CH 1/10W 2.2K	1	
R3588	ERJ6GEYG102	M.RESISTOR CH 1/10W 1K	1	
R3590	ERJ6GEYG102	M.RESISTOR CH 1/10W 1K	1	
R3591	ERJ6GEY0R00	M.RESISTOR CH 1/10W 0	1	
R3592	ERJ6GEYG102	M.RESISTOR CH 1/10W 1K	1	
R3594,95	ERJ6RBD102	M.RESISTOR CH 1/10W 1K	2	
R3597,98	ERJ6RED750	M.RESISTOR CH 1/10W 75	2	
R3599	ERJ3GEY0R00	M.RESISTOR CH 1/16W 0	1	
R3600	ERJ3GEYJ750	M.RESISTOR CH 1/16W 75	1	
R3601	ERJ3GEYJ563	M.RESISTOR CH 1/16W 56K	1	
R3603	ERJ3GEYJ101	M.RESISTOR CH 1/16W 100	1	
R3604,05	ERJ3GEYJ103	M.RESISTOR CH 1/16W 10K	2	
R3620-24	ERJ3GEYG102	M.RESISTOR CH 1/16W 1K	5	
R3625	ERJ3GEYJ103	M.RESISTOR CH 1/16W 10K	1	
R3626	ERJ3GEYG102	M.RESISTOR CH 1/16W 1K	1	
R3628	ERJ3GEY0R00	M.RESISTOR CH 1/16W 0	1	
R3630,31	ERJ3GEY0R00	M.RESISTOR CH 1/16W 0	2	
R3632	ERJ3GEYG102	M.RESISTOR CH 1/16W 1K	1	
R3636,37	ERJ3GEY0R00	M.RESISTOR CH 1/16W 0	2	
R3638,39	ERJ3GEYG102	M.RESISTOR CH 1/16W 1K	2	
R3642	ERJ3GEY0R00	M.RESISTOR CH 1/16W 0	1	
R3644	ERJ3GEY0R00	M.RESISTOR CH 1/16W 0	1	
R3645	ERJ3GEYG102	M.RESISTOR CH 1/16W 1K	1	
R3647,48	ERJ3GEYJ220	M.RESISTOR CH 1/16W 22	2	
R3649	ERJ3GEY0R00	M.RESISTOR CH 1/16W 0	1	
R3650	ERJ3GEYJ220	M.RESISTOR CH 1/16W 22	1	
R3651	ERJ3GEYJ391	M.RESISTOR CH 1/16W 390	1	
R3652	ERJ6RBD331	M.RESISTOR CH 1/10W 330	1	
R3653,54	ERJ3GEY0R00	M.RESISTOR CH 1/16W 0	2	
R3658	ERJ3GEYJ563	M.RESISTOR CH 1/16W 56K	1	
R3659	ERJ3GEYJ750	M.RESISTOR CH 1/16W 75	1	
R3660,61	ERJ3GEY0R00	M.RESISTOR CH 1/16W 0	2	
R3662,63	ERJ3GEYJ562	M.RESISTOR CH 1/16W 5.6K	2	
R3670	ERJ6RBD681	M.RESISTOR CH 1/10W 680	1	
R3671	ERJ6RBD241	M.RESISTOR CH 1/10W 240	1	
R3700	ERJ3GEY0R00	M.RESISTOR CH 1/16W 0	1	
R3716	ERJ3GEYJ101	M.RESISTOR CH 1/16W 100	1	
R3718	ERJ3GEYJ103	M.RESISTOR CH 1/16W 10K	1	
R3720	ERJ3GEYJ470	M.RESISTOR CH 1/16W 47	1	
R3721	ERJ3GEYJ101	M.RESISTOR CH 1/16W 100	1	
R3723	ERJ3GEY0R00	M.RESISTOR CH 1/16W 0	1	
R3725	ERJ3GEYJ101	M.RESISTOR CH 1/16W 100	1	
R3727	ERJ3GEY0R00	M.RESISTOR CH 1/16W 0	1	
R3728	ERJ3GEYG102	M.RESISTOR CH 1/16W 1K	1	
R3729	ERJ3GEYJ220	M.RESISTOR CH 1/16W 22	1	
R3730	ERJ3GEYG102	M.RESISTOR CH 1/16W 1K	1	
R3731	ERJ6RBD301	M.RESISTOR CH 1/10W 300	1	
R3732	ERJ6RED750	M.RESISTOR CH 1/10W 75	1	
R3733,34	ERJ6RBD102	M.RESISTOR CH 1/10W 1K	2	
R3735	ERJ6GEY0R00	M.RESISTOR CH 1/10W 0	1	
R3736,37	ERJ6RED750	M.RESISTOR CH 1/10W 75	2	
R3739	ERJ3GEYJ333	M.RESISTOR CH 1/16W 33K	1	
R3740	ERJ3GEY0R00	M.RESISTOR CH 1/16W 0	1	
R3741	ERJ3GEYJ222	M.RESISTOR CH 1/16W 2.2K	1	
R3742	ERJ3GEYJ470	M.RESISTOR CH 1/16W 47	1	
R3743	ERJ3GEY0R00	M.RESISTOR CH 1/16W 0	1	
R3746	ERJ3GEY0R00	M.RESISTOR CH 1/16W 0	1	
R3749	ERJ3GEYJ220	M.RESISTOR CH 1/16W 22	1	
R3753-68	ERJ3GEYG102	M.RESISTOR CH 1/16W 1K	16	
R3777	ERJ3GEYG102	M.RESISTOR CH 1/16W 1K	1	
R3779,80	ERJ3GEYJ222	M.RESISTOR CH 1/16W 2.2K	2	
R3781	ERJ3GEY0R00	M.RESISTOR CH 1/16W 0	1	
R3783	ERJ3GEY0R00	M.RESISTOR CH 1/16W 0	1	
TG3001-03	EYF6CU	TEST POINT	3	
TP3001-13	EYF6CU	TEST POINT	13	
TP3015	EYF6CU	TEST POINT	1	

Ref.No.	Part No.	Part Name & Description	Pcs	Remarks
VC3001,02	VCV0050	TRIMMER	2	
VR3001	VRV0113B102	V.RESISTOR 1K	1	D3EC41020001
VR3002	VRV0161B201	V.RESISTOR 200	1	
VR3004	VRV0161B502	V.RESISTOR 5K	1	
VR3006	VRV0113B503	V.RESISTOR 50K	1	D3EC45030002
VR3007	VRV0113B103	V.RESISTOR 10K	1	
VR3012	VRV0113B503	V.RESISTOR 50K	1	D3EC45030002
VR3013	VRV0113B103	V.RESISTOR 10K	1	
VR3014	VRV0161B502	V.RESISTOR 5K	1	
VR3015,16	VRV0161B203	V.RESISTOR 20K	2	
VR3019	VRV0161B201	V.RESISTOR 200	1	
VR3020,21	VRV0113B102	V.RESISTOR 1K	2	D3EC41020001
VR3025	VRV0161B202	V.RESISTOR 2K	1	
X3001,02	VSX0788	CRYSTAL OSCILLATOR	2	H1C2705B0006
X3003	VSX0197	CRYSTAL OSCILLATOR	1	
X3004	VSX0316	CRYSTAL OSCILLATOR	1	
		MISCELLANEOUS		
	VML2143	CARD PULLER	1	
	VML2144	CARD PULLER	1	
■ E5	VEP83385B	422/844 DA P.C.BOARD	1	(RTL)
C3001,02	ECUX1E104ZFV	C.CAPACITOR CH 25V 0.1U	2	
C3003	EEVHB1C470	E.CAPACITOR 16V 47U	1	
C3004	ECUX1E104ZFV	C.CAPACITOR CH 25V 0.1U	1	
C3005	EEVHB1C470	E.CAPACITOR 16V 47U	1	
C3006-31	ECUX1E104ZFV	C.CAPACITOR CH 25V 0.1U	26	
C3032	EEVHB1C100	E.CAPACITOR 16V 10U	1	
C3033	ECUX1E104ZFV	C.CAPACITOR CH 25V 0.1U	1	
C3034	EEVHB1C100	E.CAPACITOR 16V 10U	1	
C3035	ECUX1E104ZFV	C.CAPACITOR CH 25V 0.1U	1	
C3036	EEVHB1C100	E.CAPACITOR 16V 10U	1	
C3037,38	ECUX1E104KBN	C.CAPACITOR CH 25V 0.1U	2	
C3039-41	ECUX1E104ZFV	C.CAPACITOR CH 25V 0.1U	3	
C3042	ECUX1H270JCV	C.CAPACITOR CH 50V 27P	1	
C3044	ECUX1H560JCV	C.CAPACITOR CH 50V 56P	1	
C3045	ECUX1H102JCV	C.CAPACITOR CH 50V 1000P	1	
C3047-50	ECUX1E104ZFV	C.CAPACITOR CH 25V 0.1U	4	
C3051	ECUX1H220JCV	C.CAPACITOR CH 50V 22P	1	
C3054,55	ECUX1E104ZFV	C.CAPACITOR CH 25V 0.1U	2	
C3057	ECUX1H330JCV	C.CAPACITOR CH 50V 33P	1	
C3058	ECUX1E104ZFV	C.CAPACITOR CH 25V 0.1U	1	
C3060	ECUX1H820JCV	C.CAPACITOR CH 50V 82P	1	
C3061	ECUX1H102JCV	C.CAPACITOR CH 50V 1000P	1	
C3062	ECUX1H220JCV	C.CAPACITOR CH 50V 22P	1	
C3063,64	ECUX1E104ZFV	C.CAPACITOR CH 25V 0.1U	2	
C3067,68	ECUX1E104ZFV	C.CAPACITOR CH 25V 0.1U	2	
C3070	ECUX1H330JCV	C.CAPACITOR CH 50V 33P	1	
C3071	ECUX1E104ZFV	C.CAPACITOR CH 25V 0.1U	1	
C3073	ECUX1H820JCV	C.CAPACITOR CH 50V 82P	1	
C3074	ECUX1H102JCV	C.CAPACITOR CH 50V 1000P	1	
C3075	ECUX1H220JCV	C.CAPACITOR CH 50V 22P	1	
C3076,77	ECUX1E104ZFV	C.CAPACITOR CH 25V 0.1U	2	
C3078-80	EEVHB1C100	E.CAPACITOR 16V 10U	3	
C3081-85	ECUX1E104ZFV	C.CAPACITOR CH 25V 0.1U	5	
C3113	ECUX1E104ZFV	C.CAPACITOR CH 25V 0.1U	1	
C3115	ECUX1E104ZFV	C.CAPACITOR CH 25V 0.1U	1	
C3116	ECUX1H180JCV	C.CAPACITOR CH 50V 18P	1	
C3118-20	ECUX1E104ZFV	C.CAPACITOR CH 25V 0.1U	3	
C3124	ECUX1E104ZFV	C.CAPACITOR CH 25V 0.1U	1	
C3126,27	ECUX1E104ZFV	C.CAPACITOR CH 25V 0.1U	2	
C3129,30	ECUX1E104ZFV	C.CAPACITOR CH 25V 0.1U	2	
C3131	ECUX1H121JCV	C.CAPACITOR CH 50V 120P	1	
C3135	ECUX1E104ZFV	C.CAPACITOR CH 25V 0.1U	1	
C3136	EEVHB1C470	E.CAPACITOR 16V 47U	1	
C3137	ECUX1E104ZFV	C.CAPACITOR CH 25V 0.1U	1	

Ref.No.	Part No.	Part Name & Description	Pcs	Remarks
C3138	EEVHB1C100	E.CAPACITOR 16V 10U	1	
C3139,40	ECUX1E104ZFV	C.CAPACITOR CH 25V 0.1U	2	
C3141	EEVHB1C100	E.CAPACITOR 16V 10U	1	
C3142	ECUX1E104ZFV	C.CAPACITOR CH 25V 0.1U	1	
C3143,44	EEVHB1E330P	E.CAPACITOR 25V 33U	2	
C3145,46	ECUX1E104ZFV	C.CAPACITOR CH 25V 0.1U	2	
C3147,48	EEVHB1C100	E.CAPACITOR 16V 10U	2	
C3149-54	ECUX1E104ZFV	C.CAPACITOR CH 25V 0.1U	6	
C3155	EEVHB1C100	E.CAPACITOR 16V 10U	1	
C3156,57	ECUX1E104ZFV	C.CAPACITOR CH 25V 0.1U	2	
C3159,60	ECUX1E104ZFV	C.CAPACITOR CH 25V 0.1U	2	
C3161	EEVHB1E330P	E.CAPACITOR 25V 33U	1	
C3162	ECUX1E104ZFV	C.CAPACITOR CH 25V 0.1U	1	
C3163	EEVHB1C100	E.CAPACITOR 16V 10U	1	
C3164	ECUX1E104ZFV	C.CAPACITOR CH 25V 0.1U	1	
C3165	EEVHB1C100	E.CAPACITOR 16V 10U	1	
C3167	ECUX1E104ZFV	C.CAPACITOR CH 25V 0.1U	1	
C3168,69	EEVHB1C100	E.CAPACITOR 16V 10U	2	
C3170	ECUX1E104ZFV	C.CAPACITOR CH 25V 0.1U	1	
C3172,73	ECUX1E104ZFV	C.CAPACITOR CH 25V 0.1U	2	
C3203	ECUX1H681JCV	C.CAPACITOR CH 50V 680P	1	
C3207	ECUX1H101JCV	C.CAPACITOR CH 50V 100P	1	
D3001	MA152K	DIODE	1	
D3003,04	MA152K	DIODE	2	
FL3001	VLF1423	FILTER	1	J0E1155B0001
FL3002,03	VLF1424	FILTER	2	J0E5754B0001
IC3001	SN74ALS244C	IC	1	
IC3002,03	T74LCX244F	IC	2	
IC3004	C0JBAZ001638	IC	1	
IC3005	74AC04SJ	IC	1	C0JBAB000182
IC3006-08	T2242AR2C1	IC	3	
IC3009	C0JBAZ001638	IC	1	
IC3010-12	UPD485506G25	IC	3	C3HBDG000005
IC3013	ADV7122KST50	IC	1	C0FBBF000019
IC3014	AD589JR	IC	1	
IC3015	NJM084M	IC	1	C0ABFB000008
IC3016-18	LT1228CS8	IC	3	
IC3030	MC74HC32AF	IC	1	
IC3031	TC7S04F	IC	1	C0JBAB000169
IC3033	AN78N10	IC	1	
IC3034	AN78N09	IC	1	
IC3036	AN79N09	IC	1	
IC3038	NJM78L05UA	IC	1	C0CBADC00010
IC3039	NJM79L05UA	IC	1	
IC3040	AN78N05	IC	1	
IC3042	AN79N10	IC	1	
IC3054	C0JBAZ001638	IC	1	
IDO	VVVSI2902	IC	1	
L3001	VLP0133	COIL	1	
L3002	VLQ0163J220	COIL 22UH	1	
L3003,04	VLQ0576	COIL	2	
L3005	VLQ0163J220	COIL 22UH	1	
L3008	VLQ0163J3R3	COIL 3.3UH	1	
L3013	VLQ0163J470	COIL 47UH	1	
L3015-18	VLP0133	COIL	4	
P3001	VJS3538A080	CONNECTOR (FEMALE)	1	K1KB80A00059
P3002	VJS3538A052	CONNECTOR (FEMALE)	1	K1KB52A00010
P3003	VJP3125B007	CONNECTOR (MALE)	1	
Q3002	MSD601-R	TRANSISTOR	1	
Q3004	MSB709-R	TRANSISTOR	1	
Q3005	MSD601-R	TRANSISTOR	1	
Q3006,07	MSB709-R	TRANSISTOR	2	
Q3008	MSD601-R	TRANSISTOR	1	
Q3009,10	MSB709-R	TRANSISTOR	2	
Q3011,12	MSD601-R	TRANSISTOR	2	
Q3015,16	MSB709-R	TRANSISTOR	2	
Q3018,19	MSB709-R	TRANSISTOR	2	
Q3022	2SC2404-D	TRANSISTOR	1	

Ref.No.	Part No.	Part Name & Description	Pcs	Remarks
Q3024-26	2SC3757-R	TRANSISTOR	3	
Q3027	MSD601-R	TRANSISTOR	1	
Q3029	MSD601-R	TRANSISTOR	1	
Q3034	MSD601-R	TRANSISTOR	1	
Q3038	2SA1532	TRANSISTOR	1	
R3001,02	ERJ3GEYJ101	M.RESISTOR CH 1/16W 100	2	
R3009	ERJ3GEY0R00	M.RESISTOR CH 1/16W 0	1	
R3012,13	ERJ3GEYG102	M.RESISTOR CH 1/16W 1K	2	
R3014-16	ERJ3GEY0R00	M.RESISTOR CH 1/16W 0	3	
R3023,24	ERJ3GEYJ220	M.RESISTOR CH 1/16W 22	2	
R3025	ERJ3GEYJ681	M.RESISTOR CH 1/16W 680	1	
R3026,27	ERJ3GEYJ151	M.RESISTOR CH 1/16W 150	2	
R3028	ERJ3GEYJ222	M.RESISTOR CH 1/16W 2.2K	1	
R3029,30	ERJ3GEYJ151	M.RESISTOR CH 1/16W 150	2	
R3031	ERJ3GEYJ222	M.RESISTOR CH 1/16W 2.2K	1	
R3032	ERJ3GEYJ270	M.RESISTOR CH 1/16W 27	1	
R3033	ERJ3GEYJ221	M.RESISTOR CH 1/16W 220	1	
R3034	ERJ3GEYJ182	M.RESISTOR CH 1/16W 1.8K	1	
R3036	ERJ3GEYJ221	M.RESISTOR CH 1/16W 220	1	
R3038,39	ERJ3GEYJ151	M.RESISTOR CH 1/16W 150	2	
R3040	ERJ3GEYG152	M.RESISTOR CH 1/16W 1.5K	1	
R3041,42	ERJ3GEYJ151	M.RESISTOR CH 1/16W 150	2	
R3043	ERJ3GEYG152	M.RESISTOR CH 1/16W 1.5K	1	
R3044	ERJ3RBD181	M.RESISTOR CH 1/16W 180	1	
R3045	ERJ3GEYJ511	M.RESISTOR CH 1/16W 510	1	
R3049	ERJ3GEYJ681	M.RESISTOR CH 1/16W 680	1	
R3050	ERJ3GEYG102	M.RESISTOR CH 1/16W 1K	1	
R3051	ERJ3GEY0R00	M.RESISTOR CH 1/16W 0	1	
R3053	ERJ3GEYJ750	M.RESISTOR CH 1/16W 75	1	
R3054	ERJ3GEYJ241	M.RESISTOR CH 1/16W 240	1	
R3055	ERJ3GEYJ222	M.RESISTOR CH 1/16W 2.2K	1	
R3056	ERJ3GEYJ221	M.RESISTOR CH 1/16W 220	1	
R3058,59	ERJ3GEYJ151	M.RESISTOR CH 1/16W 150	2	
R3060	ERJ3GEYG152	M.RESISTOR CH 1/16W 1.5K	1	
R3061,62	ERJ3GEYJ151	M.RESISTOR CH 1/16W 150	2	
R3063	ERJ3GEYG152	M.RESISTOR CH 1/16W 1.5K	1	
R3064	ERJ3RBD181	M.RESISTOR CH 1/16W 180	1	
R3068	ERJ3GEYJ681	M.RESISTOR CH 1/16W 680	1	
R3069	ERJ3GEYG102	M.RESISTOR CH 1/16W 1K	1	
R3070	ERJ3GEY0R00	M.RESISTOR CH 1/16W 0	1	
R3072	ERJ3GEYJ750	M.RESISTOR CH 1/16W 75	1	
R3073	ERJ3GEYJ241	M.RESISTOR CH 1/16W 240	1	
R3074	ERJ3GEYJ222	M.RESISTOR CH 1/16W 2.2K	1	
R3075	ERJ3GEYJ221	M.RESISTOR CH 1/16W 220	1	
R3077	ERJ6GEY0R00	M.RESISTOR CH 1/10W 0	1	
R3084,85	ERJ3GEYJ222	M.RESISTOR CH 1/16W 2.2K	2	
R3086-91	ERJ3RBD472	M.RESISTOR CH 1/16W 4.7K	6	
R3092-94	ERJ3GEYJ331	M.RESISTOR CH 1/16W 330	3	
R3166	ERJ3GEYG102	M.RESISTOR CH 1/16W 1K	1	
R3168-70	ERJ3GEYJ103	M.RESISTOR CH 1/16W 10K	3	
R3171	ERJ3GEYJ221	M.RESISTOR CH 1/16W 220	1	
R3173	ERJ3GEYG332	M.RESISTOR CH 1/16W 3.3K	1	
R3175	ERJ3GEYG332	M.RESISTOR CH 1/16W 3.3K	1	
R3176	ERJ3GEYJ473	M.RESISTOR CH 1/16W 47K	1	
R3177	ERJ6RBD221	M.RESISTOR CH 1/10W 220	1	
R3185	ERJ6RBD391	M.RESISTOR CH 1/10W 390	1	
R3188	ERJ6RBD102	M.RESISTOR CH 1/10W 1K	1	
R3189	ERJ3GEYG472	M.RESISTOR CH 1/16W 4.7K	1	
R3191	ERJ6RBD181	M.RESISTOR CH 1/10W 180	1	
R3197	ERJ6RED510	M.RESISTOR CH 1/10W 51	1	
R3198	ERJ3GEYJ222	M.RESISTOR CH 1/16W 2.2K	1	
R3199	ERJ6RED560	M.RESISTOR CH 1/10W 56	1	
R3200	ERJ3GEYJ470	M.RESISTOR CH 1/16W 47	1	
R3201	ERJ3GEYJ101	M.RESISTOR CH 1/16W 100	1	
R3202	ERJ3GEYJ221	M.RESISTOR CH 1/16W 220	1	
R3208	ERJ3GEYJ223	M.RESISTOR CH 1/16W 22K	1	
R3209	ERJ3GEYJ221	M.RESISTOR CH 1/16W 220	1	
R3212	ERJ3GEYG332	M.RESISTOR CH 1/16W 3.3K	1	
R3215	ERJ3GEYG472	M.RESISTOR CH 1/16W 4.7K	1	
R3217-19	ERJ3GEYJ103	M.RESISTOR CH 1/16W 10K	3	
R3220	ERJ3GEYJ151	M.RESISTOR CH 1/16W 150	1	
R3221	ERJ3GEYJ222	M.RESISTOR CH 1/16W 2.2K	1	
R3223	ERJ3GEYJ470	M.RESISTOR CH 1/16W 47	1	
R3225	ERJ6RBD752	M.RESISTOR CH 1/10W 7.5K	1	

Ref.No.	Part No.	Part Name & Description	Pcs	Remarks
R3226	ERJ6RBD391	M.RESISTOR CH 1/10W 390	1	
R3227	ERJ3GEYG102	M.RESISTOR CH 1/16W 1K	1	
R3233	ERJ3GEYJ470	M.RESISTOR CH 1/16W 47	1	
R3234	ERJ3GEYG102	M.RESISTOR CH 1/16W 1K	1	
R3237	ERJ3GEYJ153	M.RESISTOR CH 1/16W 15K	1	
R3245	ERJ3GEY0R00	M.RESISTOR CH 1/16W 0	1	
R3248	ERJ3GEYG102	M.RESISTOR CH 1/16W 1K	1	
R3250-59	ERJ3GEYJ331	M.RESISTOR CH 1/16W 330	10	
R3260-64	ERJ3GEY0R00	M.RESISTOR CH 1/16W 0	5	
R3265,66	ERJ3GEYJ220	M.RESISTOR CH 1/16W 22	2	
R3267-69	ERJ3GEYJ103	M.RESISTOR CH 1/16W 10K	3	
R3274,75	ERJ3GEYG102	M.RESISTOR CH 1/16W 1K	2	
R3280	ERJ3GEY0R00	M.RESISTOR CH 1/16W 0	1	
R3282	ERJ3GEYG102	M.RESISTOR CH 1/16W 1K	1	
R3283	ERJ3GEYJ121	M.RESISTOR CH 1/16W 120	1	
R3284	ERJ3GEY0R00	M.RESISTOR CH 1/16W 0	1	
R3288,89	ERJ3GEY0R00	M.RESISTOR CH 1/16W 0	2	
R3293	ERJ3GEYJ222	M.RESISTOR CH 1/16W 2.2K	1	
R3294,95	ERJ3GEYG332	M.RESISTOR CH 1/16W 3.3K	2	
R3296-99	ERJ3GEYJ103	M.RESISTOR CH 1/16W 10K	4	
R3304-06	ERJ3GEYJ103	M.RESISTOR CH 1/16W 10K	3	
R3310	ERJ3GEY0R00	M.RESISTOR CH 1/16W 0	1	
R3311-17	ERJ3GEYG152	M.RESISTOR CH 1/16W 1.5K	7	
R3318	VRE006608222	V.RESISTOR CH 1/10W 2.2K	1	D0YD222J0001
R3319,20	VRE006606472	V.RESISTOR CH 1/10W 4.7K	2	D0YD472J0001
R3321-29	ERJ3GEY0R00	M.RESISTOR CH 1/16W 0	9	
R3330	ERJ3RBD101	M.RESISTOR CH 1/16W 100	1	
R3331,32	ERJ3GEY0R00	M.RESISTOR CH 1/16W 0	2	
R3336-39	ERJ3GEYJ151	M.RESISTOR CH 1/16W 150	4	
R3340	ERJ3GEYG152	M.RESISTOR CH 1/16W 1.5K	1	
R3356	ERJ3GEY0R00	M.RESISTOR CH 1/16W 0	1	
R3358-60	ERJ3GEYJ103	M.RESISTOR CH 1/16W 10K	3	
SW3001	VSS0367-08B	SWITCH	1	
TG3001,02	EYF6CU	TEST POINT	2	
TP3001-03	EYF6CU	TEST POINT	3	
VR3001	VRV0161B101	V.RESISTOR 100	1	
VR3002	VRV0113B103	V.RESISTOR 10K	1	
VR3003	VRV0113B102	V.RESISTOR 1K	1	D3EC41020001
VR3004	VRV0161B101	V.RESISTOR 100	1	
VR3005	VRV0113B102	V.RESISTOR 1K	1	D3EC41020001
VR3006	VRV0161B101	V.RESISTOR 100	1	
VR3007-09	VRV0113B501	V.RESISTOR 500	3	
VR3013	VRV0113B102	V.RESISTOR 1K	1	D3EC41020001
VR3016,17	VRV0113B103	V.RESISTOR 10K	2	
		MISCELLANEOUS		
	VMS4913	P.C.BOARD SPACER	3	
	XYN3+K6	SCREW	6	
■ E6	VEP84343A	F6 A PROC P.C.BOARD	1	(RTL)
■	VEP84360A	F6 SUB A JOG P.C.BOARD	1	(RTL)FOR VEP84343A
C1	EEVHB1C470	E.CAPACITOR 16V 47U	1	
C2	ECUX1E104KBN	C.CAPACITOR CH 25V 0.1U	1	
C3,C4	EEVHB1C470	E.CAPACITOR 16V 47U	2	
C5,C6	ECUX1E104KBN	C.CAPACITOR CH 25V 0.1U	2	
C7,C8	EEVHB1C470	E.CAPACITOR 16V 47U	2	
C9,10	ECUX1E104KBN	C.CAPACITOR CH 25V 0.1U	2	
C11	EEVHB1C470	E.CAPACITOR 16V 47U	1	
C12	ECUX1E104KBN	C.CAPACITOR CH 25V 0.1U	1	
C13,14	EEVHB0J101	E.CAPACITOR 6.3V 100U	2	
C15,16	ECUX1E104KBN	C.CAPACITOR CH 25V 0.1U	2	
C35,36	ECUM1H102KBN	C.CAPACITOR CH 50V 1000P	2	
C37-50	ECUX1E104KBN	C.CAPACITOR CH 25V 0.1U	14	
C101-08	ECUX1H103KBV	C.CAPACITOR CH 50V 0.01U	8	FOR VEP84360A

Ref.No.	Part No.	Part Name & Description	Pcs	Remarks
C171-79	ECUX1E104KBN	C.CAPACITOR CH 25V 0.1U	9	
C180	ECUM1H103KBN	C.CAPACITOR CH 50V 0.01U	1	
C181,82	ECUX1E104KBN	C.CAPACITOR CH 25V 0.1U	2	
C183	ECUM1H103KBN	C.CAPACITOR CH 50V 0.01U	1	
C203	EEVHB0J330	E.CAPACITOR 6.3V 33U	1	FOR VEP84360A
C207	ECUX1H103KBV	C.CAPACITOR CH 50V 0.01U	1	FOR VEP84360A
C208	ECUX1H102JCV	C.CAPACITOR CH 50V 1000P	1	FOR VEP84360A
C231-37	ECUX1E104KBN	C.CAPACITOR CH 25V 0.1U	7	
C281,82	ECUX1E104KBN	C.CAPACITOR CH 25V 0.1U	2	
C283-86	ECUM1H103KBN	C.CAPACITOR CH 50V 0.01U	4	
C287,88	EEVHB1C470	E.CAPACITOR 16V 47U	2	
C289,90	ECUX1E104KBN	C.CAPACITOR CH 25V 0.1U	2	
C291,92	EEVHB1C100	E.CAPACITOR 16V 10U	2	
C293-98	ECUX1E104KBN	C.CAPACITOR CH 25V 0.1U	6	
C311	ECUX1E104KBN	C.CAPACITOR CH 25V 0.1U	1	
C312-15	ECUM1H103KBN	C.CAPACITOR CH 50V 0.01U	4	
C316,17	EEVHB1C470	E.CAPACITOR 16V 47U	2	
C318,19	ECUX1E104KBN	C.CAPACITOR CH 25V 0.1U	2	
C320,21	EEVHB1C100	E.CAPACITOR 16V 10U	2	
C322-25	ECUX1E104KBN	C.CAPACITOR CH 25V 0.1U	4	
C328	ECUM1H680JCN	C.CAPACITOR CH 50V 68P	1	
C329	ECUM1H150JCN	C.CAPACITOR CH 50V 15P	1	
C330,31	EEVHB1C100	E.CAPACITOR 16V 10U	2	
C332,33	ECUX1E104KBN	C.CAPACITOR CH 25V 0.1U	2	
C371-74	ECUX1E104KBN	C.CAPACITOR CH 25V 0.1U	4	
C401-11	ECUX1E104KBN	C.CAPACITOR CH 25V 0.1U	11	
C451-60	ECUX1E104KBN	C.CAPACITOR CH 25V 0.1U	10	
C531,32	EEVHB1C470	E.CAPACITOR 16V 47U	2	
C552-55	ECUX1E104KBN	C.CAPACITOR CH 25V 0.1U	4	
C557,58	ECUX1E104KBN	C.CAPACITOR CH 25V 0.1U	2	
C559	ECUM1H103KBN	C.CAPACITOR CH 50V 0.01U	1	
C622-26	ECUX1E104KBN	C.CAPACITOR CH 25V 0.1U	5	
C627	ECUM1H103KBN	C.CAPACITOR CH 50V 0.01U	1	
C671-74	ECUM1H180JCN	C.CAPACITOR CH 50V 18P	4	
C675,76	ECUX1E104KBN	C.CAPACITOR CH 25V 0.1U	2	
C691	ECUM1H103KBN	C.CAPACITOR CH 50V 0.01U	1	
C692	ECUX1E104KBN	C.CAPACITOR CH 25V 0.1U	1	
C693	ECUM1H103KBN	C.CAPACITOR CH 50V 0.01U	1	
C694	EEVHB1C470	E.CAPACITOR 16V 47U	1	
C695,96	ECUX1E104KBN	C.CAPACITOR CH 25V 0.1U	2	
C697	ECUM1H103KBN	C.CAPACITOR CH 50V 0.01U	1	
C698	ECUM1H121JCN	C.CAPACITOR CH 50V 120P	1	
C700	EEVHB1C100	E.CAPACITOR 16V 10U	1	
C703	ECUM1H103KBN	C.CAPACITOR CH 50V 0.01U	1	
C704	ECUX1E104KBN	C.CAPACITOR CH 25V 0.1U	1	
C706	ECUM1H101JCN	C.CAPACITOR CH 50V 100P	1	
C709,10	EEVHP1H4R7P	E.CAPACITOR 50V 4.7U	2	
C711-14	ECUX1E104KBN	C.CAPACITOR CH 25V 0.1U	4	
C731,32	ECUM1H103KBN	C.CAPACITOR CH 50V 0.01U	2	
C733	EEVHB1C470	E.CAPACITOR 16V 47U	1	
C734	ECUX1E104KBN	C.CAPACITOR CH 25V 0.1U	1	
C735	ECUM1H103KBN	C.CAPACITOR CH 50V 0.01U	1	
C736,37	ECUX1E104KBN	C.CAPACITOR CH 25V 0.1U	2	
C738	ECUM1H121JCN	C.CAPACITOR CH 50V 120P	1	
C739	EEVHB1C100	E.CAPACITOR 16V 10U	1	
C741	ECUM1H103KBN	C.CAPACITOR CH 50V 0.01U	1	
C745	ECUM1H101JCN	C.CAPACITOR CH 50V 100P	1	
C746	ECUX1E104KBN	C.CAPACITOR CH 25V 0.1U	1	
C748,49	EEVHP1H4R7P	E.CAPACITOR 50V 4.7U	2	
C751,52	ECUX1E104KBN	C.CAPACITOR CH 25V 0.1U	2	
C771-81	ECUX1E104KBN	C.CAPACITOR CH 25V 0.1U	11	
C821	ECUM1H104ZFN	C.CAPACITOR CH 50V 0.1U	1	
C822	EEVHB0J470	E.CAPACITOR 6.3V 47U	1	
C823	ECUX1E104KBN	C.CAPACITOR CH 25V 0.1U	1	
D2	MA701A	DIODE	1	
D4,D5	MA701A	DIODE	2	
D691,92	MA152A	DIODE	2	
D693,94	MA157	DIODE	2	
D731,32	MA152A	DIODE	2	
D733,34	MA157	DIODE	2	
IC1	LT1086CM	IC	1	C0CBAYG00001
IC2	LT1086CM33	IC	1	
IC31	MC10H125M	IC	1	

Ref.No.	Part No.	Part Name & Description	Pcs	Remarks
IC33	TCVHC74F	IC	1	
IC34-36	TVHT244F	IC	3	
IC37	TCVHC08F	IC	1	
IC38	MC10H124M	IC	1	C0JBZZ000020
IC39,40	TVHT244F	IC	2	
IC41	TVHT574FT	IC	1	
IC100,01	M5256DVP10VL	IC	2	C3BBFC000171 FOR VEP84360A
IC102	C1AB00001135	IC	1	FOR VEP84360A
IC103,04	M5256DVP10VL	IC	2	C3BBFC000171 FOR VEP84360A
IC171,72	SN74S1051NS	IC	2	
IC173	74F245SJ	IC	1	C0JBCZ000183
IC174-76	74F541SJ	IC	3	C0JBCZ000190
IC177	74F32SJ	IC	1	
IC185	UPD71055GB	IC	1	
IC186	74F04SJ	IC	1	
IC187,88	TVHT138F	IC	2	
IC205	XC62FP3302P	IC	1	FOR VEP84360A
IC232	74F157ASJ	IC	1	
IC234	TVHT244F	IC	1	
IC235-38	TCVHC244F	IC	4	
IC239	TCVHC240F	IC	1	
IC283	TCVHC153F	IC	1	
IC284,85	NJM78L05UA	IC	2	C0CBADC00010
IC286,87	MC74HC4046AF	IC	2	
IC288,89	NJM2904M	IC	2	
IC292	74F04SJ	IC	1	
IC312	TCVHC153F	IC	1	
IC313,14	NJM78L05UA	IC	2	C0CBADC00010
IC315,16	MC74HC4046AF	IC	2	
IC317,18	NJM2904M	IC	2	
IC321,22	SN74LS628NS	IC	2	
IC372	TCVHC244F	IC	1	
IC374	S80726ANDP	IC	1	
IC401	EPF10K50E203	IC	1	C1ZBZ0001222
IC402	M5256DVP10VL	IC	1	C3BBFC000171
IC403,04	MN47V76SP	IC	2	
IC451	C3ABMC000026	IC	1	
IC452	EPF10K50E143	IC	1	C1ZBZ0001230
IC554	T16GH7AF1216	IC	1	C1ZBZ0001455
IC556	LC35256FM70U	IC	1	
IC557	TVHT08F	IC	1	
IC621	T16GH7AF1216	IC	1	C1ZBZ0001455
IC623	LC35256FM70U	IC	1	
IC671,72	AD1893JST	IC	2	
IC691	NJM78L05UA	IC	1	C0CBADC00010
IC697	DS9637ACN	IC	1	C0ZAZ0000012
IC700	TCVHC08F	IC	1	
IC701	74AC04SJ	IC	1	C0JBAB000182
IC702	SN75158P	IC	1	
IC731	NJM78L05UA	IC	1	C0CBADC00010
IC734	DS9637ACN	IC	1	C0ZAZ0000012
IC737	SN75158P	IC	1	
IC773	TVHT244F	IC	1	
IC775	TCVHC157F	IC	1	
IC776	MB87D136APFV	IC	1	C1ZBZ0001517
IC777,78	TCVHC74F	IC	2	
IC823	TL7705CPSB	IC	1	
ID0	VVVSI3298B	IC	1	
IP373	EPC2TC32	IC	1	
JP200,01	VJR1008	EARTH LUG	2	FOR VEP84360A
L1-L3	VLF1151A132	COIL	3	
L5,L6	VLF1151A132	COIL	2	
P1,P2	VJP3454B096	CONNECTOR (MALE)	2	K1KA96B00021
P10	VJP1231T	CONNECTOR (MALE) 4P	1	
P200	VJS3886A068	CONNECTOR (FEMALE)	1	K1KB68A00011 FOR VEP84360A
P371	VJP3125B008	CONNECTOR (MALE)	1	
P531	VJP3635A068	CONNECTOR (MALE)	1	K1KA68A00016
P821	VJP3635A068	CONNECTOR (MALE)	1	K1KA68A00016
Q691	2SJ163-Q	TRANSISTOR	1	

Ref.No.	Part No.	Part Name & Description	Pcs	Remarks
Q692-94	2SC2480	TRANSISTOR	3	
Q731	2SJ163-Q	TRANSISTOR	1	
Q732-34	2SC2480	TRANSISTOR	3	
R1,R2	ERJ6RBD101	M.RESISTOR CH 1/10W 100	2	
R31-34	ERJ6GEYG220	M.RESISTOR CH 1/10W 22	4	
R37,38	ERJ6GEY0R00	M.RESISTOR CH 1/10W 0	2	
R42,43	ERJ6GEYG101	M.RESISTOR CH 1/10W 100	2	
R44-46	ERJ6GEY0R00	M.RESISTOR CH 1/10W 0	3	
R48,49	ERJ6GEY0R00	M.RESISTOR CH 1/10W 0	2	
R53-56	ERJ6GEY0R00	M.RESISTOR CH 1/10W 0	4	
R65-67	ERJ6GEYG103	M.RESISTOR CH 1/10W 10K	3	
R68	ERJ6GEYG101	M.RESISTOR CH 1/10W 100	1	
R69	ERJ6GEY0R00	M.RESISTOR CH 1/10W 0	1	
R70,71	ERJ6GEYG101	M.RESISTOR CH 1/10W 100	2	
R84-88	ERJ6GEYG470	M.RESISTOR CH 1/10W 47	5	
R90-96	ERJ6GEYG220	M.RESISTOR CH 1/10W 22	7	
R97-99	ERJ6GEYG470	M.RESISTOR CH 1/10W 47	3	
R100	ERJ3GEYJ470	M.RESISTOR CH 1/16W 47	1	FOR VEP84360A
R102,03	ERJ3GEYJ331	M.RESISTOR CH 1/16W 330	2	FOR VEP84360A
R104	ERJ3GEYG102	M.RESISTOR CH 1/16W 1K	1	FOR VEP84360A
R106	ERJ3GEYG102	M.RESISTOR CH 1/16W 1K	1	FOR VEP84360A
R106	ERJ6GEY0R00	M.RESISTOR CH 1/10W 0	1	
R107	ERJ3GEYJ103	M.RESISTOR CH 1/16W 10K	1	FOR VEP84360A
R107-11	ERJ6GEY0R00	M.RESISTOR CH 1/10W 0	5	
R112	ERJ3GEY0R00	M.RESISTOR CH 1/16W 0	1	FOR VEP84360A
R112	ERJ6GEY0R00	M.RESISTOR CH 1/10W 0	1	
R113	ERJ3GEY0R00	M.RESISTOR CH 1/16W 0	1	FOR VEP84360A
R113	ERJ6GEY0R00	M.RESISTOR CH 1/10W 0	1	
R114	ERJ3GEY0R00	M.RESISTOR CH 1/16W 0	1	FOR VEP84360A
R114-18	ERJ6GEY0R00	M.RESISTOR CH 1/10W 0	5	
R119	ERJ6GEYG103	M.RESISTOR CH 1/10W 10K	1	
R120	ERJ6GEYG331	M.RESISTOR CH 1/10W 330	1	
R121	ERJ6GEY0R00	M.RESISTOR CH 1/10W 0	1	
R122	ERJ6GEYG103	M.RESISTOR CH 1/10W 10K	1	
R123,24	ERJ6GEY0R00	M.RESISTOR CH 1/10W 0	2	
R125	ERJ3GEYJ470	M.RESISTOR CH 1/16W 47	1	FOR VEP84360A
R125,26	ERJ6GEY0R00	M.RESISTOR CH 1/10W 0	2	
R127	ERJ3GEYJ470	M.RESISTOR CH 1/16W 47	1	FOR VEP84360A
R130	ERJ3GEYJ470	M.RESISTOR CH 1/16W 47	1	FOR VEP84360A
R132	ERJ3GEYJ470	M.RESISTOR CH 1/16W 47	1	FOR VEP84360A
R134	ERJ3GEYJ470	M.RESISTOR CH 1/16W 47	1	FOR VEP84360A
R134	ERJ6GEY0R00	M.RESISTOR CH 1/10W 0	1	
R135	ERJ3GEYJ470	M.RESISTOR CH 1/16W 47	1	FOR VEP84360A
R135	ERJ6GEY0R00	M.RESISTOR CH 1/10W 0	1	
R136	ERJ3GEYJ331	M.RESISTOR CH 1/16W 330	1	FOR VEP84360A
R136	ERJ6GEY0R00	M.RESISTOR CH 1/10W 0	1	
R137	ERJ3GEYJ331	M.RESISTOR CH 1/16W 330	1	FOR VEP84360A
R137	ERJ6GEYG101	M.RESISTOR CH 1/10W 100	1	
R138	ERJ3GEY0R00	M.RESISTOR CH 1/16W 0	1	FOR VEP84360A
R138,39	ERJ6GEYG101	M.RESISTOR CH 1/10W 100	2	
R140-45	ERJ6GEYG271	M.RESISTOR CH 1/10W 270	6	
R146-51	ERJ6GEYG220	M.RESISTOR CH 1/10W 22	6	
R152,53	ERJ6GEYG470	M.RESISTOR CH 1/10W 47	2	
R159	ERJ6GEY0R00	M.RESISTOR CH 1/10W 0	1	
R160	ERJ6GEYG103	M.RESISTOR CH 1/10W 10K	1	
R171-93	ERJ6GEYG470	M.RESISTOR CH 1/10W 47	23	
R194-97	ERJ6GEYG331	M.RESISTOR CH 1/10W 330	4	
R198-00	ERJ6GEYG332	M.RESISTOR CH 1/10W 3.3K	3	
R201	ERJ3GEY0R00	M.RESISTOR CH 1/16W 0	1	FOR VEP84360A
R201	ERJ6GEYG332	M.RESISTOR CH 1/10W 3.3K	1	
R202-05	ERJ6GEYG152	M.RESISTOR CH 1/10W 1.5K	4	
R206	ERJ3GEYJ103	M.RESISTOR CH 1/16W 10K	1	FOR VEP84360A
R206,07	ERJ6GEYG152	M.RESISTOR CH 1/10W 1.5K	2	
R208	ERJ3GEYJ470	M.RESISTOR CH 1/16W 47	1	FOR VEP84360A
R208	ERJ6GEYG332	M.RESISTOR CH 1/10W 3.3K	1	
R209	ERJ3GEYJ470	M.RESISTOR CH 1/16W 47	1	FOR VEP84360A
R209	ERJ6GEYG332	M.RESISTOR CH 1/10W 3.3K	1	
R210	ERJ3GEYJ470	M.RESISTOR CH 1/16W 47	1	FOR VEP84360A
R210	ERJ6GEYG332	M.RESISTOR CH 1/10W 3.3K	1	
R211	ERJ3GEYJ470	M.RESISTOR CH 1/16W 47	1	FOR VEP84360A
R211	ERJ6GEYG332	M.RESISTOR CH 1/10W 3.3K	1	
R212	ERJ3GEYJ470	M.RESISTOR CH 1/16W 47	1	FOR VEP84360A
R212-16	ERJ6GEYG152	M.RESISTOR CH 1/10W 1.5K	5	
R217	ERJ3GEYJ470	M.RESISTOR CH 1/16W 47	1	FOR VEP84360A

Ref.No.	Part No.	Part Name & Description	Pcs	Remarks
R217	ERJ6GEYG103	M.RESISTOR CH 1/10W 10K	1	
R218	ERJ3GEYJ470	M.RESISTOR CH 1/16W 47	1	FOR VEP84360A
R218	ERJ6GEYG103	M.RESISTOR CH 1/10W 10K	1	
R220-22	ERJ6GEYG103	M.RESISTOR CH 1/10W 10K	3	
R223	ERJ3GEYJ470	M.RESISTOR CH 1/16W 47	1	FOR VEP84360A
R223	ERJ6GEYG103	M.RESISTOR CH 1/10W 10K	1	
R224	ERJ3GEYJ470	M.RESISTOR CH 1/16W 47	1	FOR VEP84360A
R229,30	ERJ3GEYJ470	M.RESISTOR CH 1/16W 47	2	FOR VEP84360A
R231	ERJ3GEY0R00	M.RESISTOR CH 1/16W 0	1	FOR VEP84360A
R232,33	ERJ3GEYJ470	M.RESISTOR CH 1/16W 47	2	FOR VEP84360A
R236	ERJ6GEYG101	M.RESISTOR CH 1/10W 100	1	
R237	ERJ3GEY0R00	M.RESISTOR CH 1/16W 0	1	FOR VEP84360A
R237	ERJ6GEYG101	M.RESISTOR CH 1/10W 100	1	
R238	ERJ3GEYJ470	M.RESISTOR CH 1/16W 47	1	FOR VEP84360A
R238	ERJ6GEYG101	M.RESISTOR CH 1/10W 100	1	
R239	ERJ3GEYJ470	M.RESISTOR CH 1/16W 47	1	FOR VEP84360A
R239	ERJ6GEYG101	M.RESISTOR CH 1/10W 100	1	
R240	ERJ3GEY0R00	M.RESISTOR CH 1/16W 0	1	FOR VEP84360A
R240,41	ERJ6GEYG101	M.RESISTOR CH 1/10W 100	2	
R242	ERJ3GEYJ470	M.RESISTOR CH 1/16W 47	1	FOR VEP84360A
R242	ERJ6GEYG220	M.RESISTOR CH 1/10W 22	1	
R243	ERJ3GEYJ470	M.RESISTOR CH 1/16W 47	1	FOR VEP84360A
R243,44	ERJ6GEYG220	M.RESISTOR CH 1/10W 22	2	
R245	ERJ3GEY0R00	M.RESISTOR CH 1/16W 0	1	FOR VEP84360A
R245	ERJ6GEYG220	M.RESISTOR CH 1/10W 22	1	
R246	ERJ3GEYJ470	M.RESISTOR CH 1/16W 47	1	FOR VEP84360A
R246	ERJ6GEYG220	M.RESISTOR CH 1/10W 22	1	
R247	ERJ3GEYJ470	M.RESISTOR CH 1/16W 47	1	FOR VEP84360A
R247	ERJ6GEYG220	M.RESISTOR CH 1/10W 22	1	
R250,51	ERJ6GEYG220	M.RESISTOR CH 1/10W 22	2	
R252	ERJ3GEY0R00	M.RESISTOR CH 1/16W 0	1	FOR VEP84360A
R252	ERJ6GEYG220	M.RESISTOR CH 1/10W 22	1	
R253	ERJ3GEYJ470	M.RESISTOR CH 1/16W 47	1	FOR VEP84360A
R253	ERJ6GEYG220	M.RESISTOR CH 1/10W 22	1	
R254	ERJ6GEY0R00	M.RESISTOR CH 1/10W 0	1	
R255	ERJ3GEYJ470	M.RESISTOR CH 1/16W 47	1	FOR VEP84360A
R255	ERJ6GEY0R00	M.RESISTOR CH 1/10W 0	1	
R256	ERJ3GEYJ470	M.RESISTOR CH 1/16W 47	1	FOR VEP84360A
R256	ERJ6GEYG220	M.RESISTOR CH 1/10W 22	1	
R257	ERJ3GEY0R00	M.RESISTOR CH 1/16W 0	1	FOR VEP84360A
R257-60	ERJ6GEYG470	M.RESISTOR CH 1/10W 47	4	
R262	ERJ3GEYJ470	M.RESISTOR CH 1/16W 47	1	FOR VEP84360A
R262	ERJ6GEYG470	M.RESISTOR CH 1/10W 47	1	
R263,02	ERJ3GEYJ470	M.RESISTOR CH 1/16W 47	2	FOR VEP84360A
R264	ERJ6GEYG470	M.RESISTOR CH 1/10W 47	1	
R266	ERJ6GEYG470	M.RESISTOR CH 1/10W 47	1	
R268	ERJ3GEY0R00	M.RESISTOR CH 1/16W 0	1	FOR VEP84360A
R268	ERJ6GEYG470	M.RESISTOR CH 1/10W 47	1	
R269	ERJ6GEYG331	M.RESISTOR CH 1/10W 330	1	
R270	ERJ6GEYG470	M.RESISTOR CH 1/10W 47	1	
R271	ERJ6GEYG220	M.RESISTOR CH 1/10W 22	1	
R272	ERJ6GEYG470	M.RESISTOR CH 1/10W 47	1	
R273	ERJ6GEYG220	M.RESISTOR CH 1/10W 22	1	
R277	ERJ3GEY0R00	M.RESISTOR CH 1/16W 0	1	FOR VEP84360A
R281	ERJ6GEYG101	M.RESISTOR CH 1/10W 100	1	
R282,83	ERJ6GEYG102	M.RESISTOR CH 1/10W 1K	2	
R284,85	ERJ6GEYF333	M.RESISTOR CH 1/10W 33K	2	
R286,87	ERJ6GEYG102	M.RESISTOR CH 1/10W 1K	2	
R288,89	ERJ6GEYG220	M.RESISTOR CH 1/10W 22	2	
R311	ERJ6GEYG101	M.RESISTOR CH 1/10W 100	1	
R312,13	ERJ6GEYG102	M.RESISTOR CH 1/10W 1K	2	
R314,15	ERJ6GEYF333	M.RESISTOR CH 1/10W 33K	2	
R316,17	ERJ6GEYG102	M.RESISTOR CH 1/10W 1K	2	
R318	ERJ6GEYG151	M.RESISTOR CH 1/10W 150	1	
R319	ERJ6GEY0R00	M.RESISTOR CH 1/10W 0	1	
R320	ERJ6GEYG102	M.RESISTOR CH 1/10W 1K	1	
R321	ERJ6GEYG331	M.RESISTOR CH 1/10W 330	1	
R322	ERJ6GEYJ751	M.RESISTOR CH 1/10W 750	1	
R323	ERJ6GEYG681	M.RESISTOR CH 1/10W 680	1	
R324,25	ERJ6GEY0R00	M.RESISTOR CH 1/10W 0	2	
R326,27	ERJ6GEYF561	M.RESISTOR CH 1/10W 560	2	
R330	ERJ6GEYG220	M.RESISTOR CH 1/10W 22	1	
R371-73	ERJ6GEYG102	M.RESISTOR CH 1/10W 1K	3	
R375	ERJ6GEYG102	M.RESISTOR CH 1/10W 1K	1	
R376	ERJ6GEY0R00	M.RESISTOR CH 1/10W 0	1	

Ref.No.	Part No.	Part Name & Description	Pcs	Remarks
R378	ERJ6GEYG101	M.RESISTOR CH 1/10W 100	1	
R385-87	ERJ6GEYG103	M.RESISTOR CH 1/10W 10K	3	
R388	ERJ6GEYG101	M.RESISTOR CH 1/10W 100	1	
R401-08	ERJ6GEY0R00	M.RESISTOR CH 1/10W 0	8	
R409-11	ERJ6GEYG102	M.RESISTOR CH 1/10W 1K	3	
R413	ERJ6GEY0R00	M.RESISTOR CH 1/10W 0	1	
R415	ERJ6GEY0R00	M.RESISTOR CH 1/10W 0	1	
R416	ERJ6GEYG103	M.RESISTOR CH 1/10W 10K	1	
R417	ERJ6GEY0R00	M.RESISTOR CH 1/10W 0	1	
R419	ERJ6GEY0R00	M.RESISTOR CH 1/10W 0	1	
R421,22	ERJ6GEY0R00	M.RESISTOR CH 1/10W 0	2	
R423	ERJ6GEYG102	M.RESISTOR CH 1/10W 1K	1	
R424-26	ERJ6GEY0R00	M.RESISTOR CH 1/10W 0	3	
R430,31	ERJ6GEY0R00	M.RESISTOR CH 1/10W 0	2	
R433-36	ERJ6GEY0R00	M.RESISTOR CH 1/10W 0	4	
R438	ERJ6GEYG103	M.RESISTOR CH 1/10W 10K	1	
R451-64	ERJ6GEY0R00	M.RESISTOR CH 1/10W 0	14	
R466	ERJ6GEY0R00	M.RESISTOR CH 1/10W 0	1	
R468	ERJ6GEY0R00	M.RESISTOR CH 1/10W 0	1	
R470	ERJ6GEY0R00	M.RESISTOR CH 1/10W 0	1	
R472	ERJ6GEY0R00	M.RESISTOR CH 1/10W 0	1	
R477,78	ERJ6GEYG102	M.RESISTOR CH 1/10W 1K	2	
R485,86	ERJ6GEY0R00	M.RESISTOR CH 1/10W 0	2	
R488	ERJ6GEY0R00	M.RESISTOR CH 1/10W 0	1	
R490	ERJ6GEY0R00	M.RESISTOR CH 1/10W 0	1	
R492	ERJ6GEY0R00	M.RESISTOR CH 1/10W 0	1	
R517	ERJ6GEYG102	M.RESISTOR CH 1/10W 1K	1	
R518,19	ERJ6GEY0R00	M.RESISTOR CH 1/10W 0	2	
R521	ERJ6GEYG103	M.RESISTOR CH 1/10W 10K	1	
R531-36	ERJ6GEYG470	M.RESISTOR CH 1/10W 47	6	
R538	ERJ6GEY0R00	M.RESISTOR CH 1/10W 0	1	
R539-44	ERJ6GEYG103	M.RESISTOR CH 1/10W 10K	6	
R546	ERJ6GEY0R00	M.RESISTOR CH 1/10W 0	1	
R552	ERJ6GEY0R00	M.RESISTOR CH 1/10W 0	1	
R554-61	ERJ6GEYG103	M.RESISTOR CH 1/10W 10K	8	
R563	ERJ6GEY0R00	M.RESISTOR CH 1/10W 0	1	
R566	ERJ6GEY0R00	M.RESISTOR CH 1/10W 0	1	
R567	ERJ6GEYG331	M.RESISTOR CH 1/10W 330	1	
R568	ERJ6GEY0R00	M.RESISTOR CH 1/10W 0	1	
R569-72	ERJ6GEYG102	M.RESISTOR CH 1/10W 1K	4	
R574,75	ERJ6GEY0R00	M.RESISTOR CH 1/10W 0	2	
R579	ERJ6GEY0R00	M.RESISTOR CH 1/10W 0	1	
R580	ERJ6GEYG331	M.RESISTOR CH 1/10W 330	1	
R590	ERJ6GEY0R00	M.RESISTOR CH 1/10W 0	1	
R592	ERJ6GEYG331	M.RESISTOR CH 1/10W 330	1	
R594	ERJ6GEYG103	M.RESISTOR CH 1/10W 10K	1	
R601	ERJ6GEY0R00	M.RESISTOR CH 1/10W 0	1	
R603	ERJ6GEYG103	M.RESISTOR CH 1/10W 10K	1	
R604,05	ERJ6GEY0R00	M.RESISTOR CH 1/10W 0	2	
R609	ERJ6GEY0R00	M.RESISTOR CH 1/10W 0	1	
R610-12	ERJ6GEYG103	M.RESISTOR CH 1/10W 10K	3	
R621	ERJ6GEY0R00	M.RESISTOR CH 1/10W 0	1	
R622-29	ERJ6GEYG103	M.RESISTOR CH 1/10W 10K	8	
R630	ERJ6GEY0R00	M.RESISTOR CH 1/10W 0	1	
R632,33	ERJ6GEY0R00	M.RESISTOR CH 1/10W 0	2	
R634	ERJ6GEYG331	M.RESISTOR CH 1/10W 330	1	
R635,36	ERJ6GEY0R00	M.RESISTOR CH 1/10W 0	2	
R638	ERJ6GEY0R00	M.RESISTOR CH 1/10W 0	1	
R641	ERJ6GEY0R00	M.RESISTOR CH 1/10W 0	1	
R642	ERJ6GEYG331	M.RESISTOR CH 1/10W 330	1	
R651	ERJ6GEY0R00	M.RESISTOR CH 1/10W 0	1	
R652	ERJ6GEYG331	M.RESISTOR CH 1/10W 330	1	
R671	ERJ6GEY0R00	M.RESISTOR CH 1/10W 0	1	
R673	ERJ6GEYG101	M.RESISTOR CH 1/10W 100	1	
R675	ERJ6GEYG101	M.RESISTOR CH 1/10W 100	1	
R691	ERJ6GEY0R00	M.RESISTOR CH 1/10W 0	1	
R693	ERJ6GEYF561	M.RESISTOR CH 1/10W 560	1	
R694,95	ERJ6GEYG332	M.RESISTOR CH 1/10W 3.3K	2	
R696	ERJ6RBD111	M.RESISTOR CH 1/10W 110	1	
R697	ERJ6GEYF822	M.RESISTOR CH 1/10W 8.2K	1	
R700	ERJ6GEYG103	M.RESISTOR CH 1/10W 10K	1	
R701	ERJ6GEYG102	M.RESISTOR CH 1/10W 1K	1	
R704	ERJ6GEYG101	M.RESISTOR CH 1/10W 100	1	
R710	ERJ6GEY0R00	M.RESISTOR CH 1/10W 0	1	
R713	ERJ6GEYG105	M.RESISTOR CH 1/10W 1M	1	

Ref.No.	Part No.	Part Name & Description	Pcs	Remarks
R714,15	ERJ6RED560	M.RESISTOR CH 1/10W 56	2	
R717	ERJ6GEY0R00	M.RESISTOR CH 1/10W 0	1	
R733	ERJ6GEY0R00	M.RESISTOR CH 1/10W 0	1	
R735	ERJ6GEYF561	M.RESISTOR CH 1/10W 560	1	
R736,37	ERJ6GEYG332	M.RESISTOR CH 1/10W 3.3K	2	
R738	ERJ6GEYF822	M.RESISTOR CH 1/10W 8.2K	1	
R739	ERJ6GEYG103	M.RESISTOR CH 1/10W 10K	1	
R740	ERJ6GEYG102	M.RESISTOR CH 1/10W 1K	1	
R741	ERJ6RBD111	M.RESISTOR CH 1/10W 110	1	
R743	ERJ6GEYG101	M.RESISTOR CH 1/10W 100	1	
R752	ERJ6GEYG105	M.RESISTOR CH 1/10W 1M	1	
R753	ERJ6GEYG560	M.RESISTOR CH 1/10W 56	1	
R755	ERJ6GEYG560	M.RESISTOR CH 1/10W 56	1	
R757	ERJ6GEY0R00	M.RESISTOR CH 1/10W 0	1	
R771-73	ERJ6GEY0R00	M.RESISTOR CH 1/10W 0	3	
R774	ERJ6GEYG101	M.RESISTOR CH 1/10W 100	1	
R775	ERJ6GEY0R00	M.RESISTOR CH 1/10W 0	1	
R778	ERJ6GEY0R00	M.RESISTOR CH 1/10W 0	1	
R780	ERJ6GEY0R00	M.RESISTOR CH 1/10W 0	1	
R782	ERJ6GEY0R00	M.RESISTOR CH 1/10W 0	1	
R784	ERJ6GEYG331	M.RESISTOR CH 1/10W 330	1	
R786	ERJ6GEY0R00	M.RESISTOR CH 1/10W 0	1	
R792,93	ERJ6GEY0R00	M.RESISTOR CH 1/10W 0	2	
R795	ERJ6GEY0R00	M.RESISTOR CH 1/10W 0	1	
R799	ERJ6GEY0R00	M.RESISTOR CH 1/10W 0	1	
R801	ERJ6GEY0R00	M.RESISTOR CH 1/10W 0	1	
R803	ERJ6GEYG102	M.RESISTOR CH 1/10W 1K	1	
R804	ERJ6GEY0R00	M.RESISTOR CH 1/10W 0	1	
R806	ERJ6GEY0R00	M.RESISTOR CH 1/10W 0	1	
R823	ERJ6GEYG103	M.RESISTOR CH 1/10W 10K	1	
R830	ERJ6GEY0R00	M.RESISTOR CH 1/10W 0	1	
R871-74	ERJ6GEY0R00	M.RESISTOR CH 1/10W 0	4	
R877	ERJ6GEY0R00	M.RESISTOR CH 1/10W 0	1	
R883-85	ERJ6GEY0R00	M.RESISTOR CH 1/10W 0	3	
T691,92	VLT0890	TRANSFORMER	2	
T731,32	VLT0890	TRANSFORMER	2	
TG1-G6	VJR0646	TEST POINT	6	D0X0R0000022
TP231-33	EYF6CU	TEST POINT	3	
TP281-84	VJR0646	TEST POINT	4	D0X0R0000022
TP311-14	VJR0646	TEST POINT	4	D0X0R0000022
X281	VSX0912	CRYSTAL OSCILLATOR	1	H4G4504A0001
X282	VSX0910	CRYSTAL OSCILLATOR	1	H1C1225A0005
X671,72	VSX0519	CRYSTAL OSCILLATOR	2	H0D160500011
X691	VSX0910	CRYSTAL OSCILLATOR	1	H1C1225A0005
X731	VSX0910	CRYSTAL OSCILLATOR	1	H1C1225A0005
		MISCELLANEOUS		
	VML2143	CARD PULLER	1	
	VML2144	CARD PULLER	1	
	VMS6082	SPACER	4	FOR VEP84360A
	XYN3+K6	SCREW	8	FOR VEP84360A
■ E7	VEP83409C	F7 VIDEO IN P.C.BOARD	1	(RTL)
C1,C2	ECUM1H103KBN	C.CAPACITOR CH 50V 0.01U	2	
C3	ECUM1H820JCN	C.CAPACITOR CH 50V 82P	1	
C4	ECUM1H103KBN	C.CAPACITOR CH 50V 0.01U	1	
C5-C7	ECUM1E104ZFN	C.CAPACITOR CH 25V 0.1U	3	
C8	EEVHB0J330	E.CAPACITOR 6.3V 33U	1	
C9	ECUM1H101JCN	C.CAPACITOR CH 50V 100P	1	
C20-26	ECUM1E104ZFN	C.CAPACITOR CH 25V 0.1U	7	
C27	EEVHB0J330	E.CAPACITOR 6.3V 33U	1	
C28	ECUM1E104ZFN	C.CAPACITOR CH 25V 0.1U	1	
C29	EEVHB0J330	E.CAPACITOR 6.3V 33U	1	
C30	ECUM1E104ZFN	C.CAPACITOR CH 25V 0.1U	1	

Ref.No.	Part No.	Part Name & Description	Pcs	Remarks
C31	EEVHB0J330	E.CAPACITOR 6.3V 33U	1	
C32	ECUM1E104ZFN	C.CAPACITOR CH 25V 0.1U	1	
C33	EEVHB1E4R7	E.CAPACITOR 25V 4.7U	1	
C39	ECEA1CGE221	E.CAPACITOR 16V 220U	1	
C51	ECUM1H101JCN	C.CAPACITOR CH 50V 100P	1	
C101,02	ECUM1E104ZFN	C.CAPACITOR CH 25V 0.1U	2	
C103	EEVHB1C470	E.CAPACITOR 16V 47U	1	
C104-06	ECUM1E104ZFN	C.CAPACITOR CH 25V 0.1U	3	
C107	EEVHB0J330	E.CAPACITOR 6.3V 33U	1	
C108	ECUM1E104ZFN	C.CAPACITOR CH 25V 0.1U	1	
C109	EEVHB1C470	E.CAPACITOR 16V 47U	1	
C110-12	ECUM1E104ZFN	C.CAPACITOR CH 25V 0.1U	3	
C113	EEVHB1C470	E.CAPACITOR 16V 47U	1	
C114-16	ECUM1E104ZFN	C.CAPACITOR CH 25V 0.1U	3	
C117	EEVHB0J330	E.CAPACITOR 6.3V 33U	1	
C118	ECUM1E104ZFN	C.CAPACITOR CH 25V 0.1U	1	
C119	EEVHB1C470	E.CAPACITOR 16V 47U	1	
C120	ECUM1E104ZFN	C.CAPACITOR CH 25V 0.1U	1	
C133,34	ECUM1E104ZFN	C.CAPACITOR CH 25V 0.1U	2	
C135	EEVHB0J330	E.CAPACITOR 6.3V 33U	1	
C136	ECUM1E683KBN	C.CAPACITOR CH 25V 0.068U	1	
C137	ECUM1H471JCN	C.CAPACITOR CH 50V 470P	1	
C138	EEVHB1H1R0	E.CAPACITOR 50V 1U	1	
C139	ECUM1E104ZFN	C.CAPACITOR CH 25V 0.1U	1	
C140	EEVHB1H4R7	E.CAPACITOR 50V 4.7U	1	
C141	ECUM1H821JCN	C.CAPACITOR CH 50V 820P	1	
C142	EEVHB0J330	E.CAPACITOR 6.3V 33U	1	
C143	ECUX1H392KBN	C.CAPACITOR CH 50V 3900P	1	
C144	ECUM1H152KBN	C.CAPACITOR CH 50V 1500P	1	
C145	EEVHB1HR68	E.CAPACITOR 50V 0.68U	1	
C146	ECUM1E104ZFN	C.CAPACITOR CH 25V 0.1U	1	
C151-58	ECUM1E104ZFN	C.CAPACITOR CH 25V 0.1U	8	
C160	ECUM1E104ZFN	C.CAPACITOR CH 25V 0.1U	1	
C163	ECKF1H181KB	C.CAPACITOR 50V 180P	1	
C201-05	ECUM1E104ZFN	C.CAPACITOR CH 25V 0.1U	5	
C207-10	ECUM1E104ZFN	C.CAPACITOR CH 25V 0.1U	4	
C211	ECUM1H103KBN	C.CAPACITOR CH 50V 0.01U	1	
C221	ECKF1H181KB	C.CAPACITOR 50V 180P	1	
C251-54	ECUM1E104ZFN	C.CAPACITOR CH 25V 0.1U	4	
C256-58	ECUM1E104ZFN	C.CAPACITOR CH 25V 0.1U	3	
C262-66	ECUM1E104ZFN	C.CAPACITOR CH 25V 0.1U	5	
C301	EEVHB1C100	E.CAPACITOR 16V 10U	1	
C302	ECUM1E104ZFN	C.CAPACITOR CH 25V 0.1U	1	
C303	EEVHB1E4R7	E.CAPACITOR 25V 4.7U	1	
C304-06	ECUM1E104ZFN	C.CAPACITOR CH 25V 0.1U	3	
C307	EEVHB1C100	E.CAPACITOR 16V 10U	1	
C308	ECUM1E104ZFN	C.CAPACITOR CH 25V 0.1U	1	
C309	EEVHB1C100	E.CAPACITOR 16V 10U	1	
C310,11	ECUM1E104ZFN	C.CAPACITOR CH 25V 0.1U	2	
C312	ECUX1E104KBN	C.CAPACITOR CH 25V 0.1U	1	
C317	EEVHB1C100	E.CAPACITOR 16V 10U	1	
C318-21	ECUM1E104ZFN	C.CAPACITOR CH 25V 0.1U	4	
C351	EEVHB0J330	E.CAPACITOR 6.3V 33U	1	
C352	ECUM1E104ZFN	C.CAPACITOR CH 25V 0.1U	1	
C353	EEVHB0J330	E.CAPACITOR 6.3V 33U	1	
C354	ECUM1E104ZFN	C.CAPACITOR CH 25V 0.1U	1	
C355	EEVHB0J330	E.CAPACITOR 6.3V 33U	1	
C356	ECUM1E104ZFN	C.CAPACITOR CH 25V 0.1U	1	
C357	EEVHB0J330	E.CAPACITOR 6.3V 33U	1	
C358	ECUM1E104ZFN	C.CAPACITOR CH 25V 0.1U	1	
C359	EEVHB1C470	E.CAPACITOR 16V 47U	1	
C360	ECUM1E104ZFN	C.CAPACITOR CH 25V 0.1U	1	
C361	ECUM1H010CCN	C.CAPACITOR CH 50V 1P	1	
C362	ECUM1H390JCN	C.CAPACITOR CH 50V 39P	1	
C363-65	ECUM1E104ZFN	C.CAPACITOR CH 25V 0.1U	3	
C367	ECUX1E104KBN	C.CAPACITOR CH 25V 0.1U	1	
C368	ECUM1H180JCN	C.CAPACITOR CH 50V 18P	1	
C370-72	ECUM1E104ZFN	C.CAPACITOR CH 25V 0.1U	3	
C373	EEVHB0J330	E.CAPACITOR 6.3V 33U	1	
C374	ECUM1E104ZFN	C.CAPACITOR CH 25V 0.1U	1	
C375	EEVHB0J330	E.CAPACITOR 6.3V 33U	1	
C376-83	ECUM1E104ZFN	C.CAPACITOR CH 25V 0.1U	8	
C385	ECUM1H221JCN	C.CAPACITOR CH 50V 220P	1	
C401	EEVHB0J330	E.CAPACITOR 6.3V 33U	1	
C402	ECUM1E104ZFN	C.CAPACITOR CH 25V 0.1U	1	

Ref.No.	Part No.	Part Name & Description	Pcs	Remarks
C403	ECUM1H470JCN	C.CAPACITOR CH 50V 47P	1	
C404	ECUM1H820JCN	C.CAPACITOR CH 50V 82P	1	
C405,06	ECUM1H103KBN	C.CAPACITOR CH 50V 0.01U	2	
C407	EEVHB0J330	E.CAPACITOR 6.3V 33U	1	
C408	ECUM1E104ZFN	C.CAPACITOR CH 25V 0.1U	1	
C409	EEVHB1HR47	E.CAPACITOR 50V 0.47U	1	
C410,11	ECUM1H103KBN	C.CAPACITOR CH 50V 0.01U	2	
C417	ECUM1E104ZFN	C.CAPACITOR CH 25V 0.1U	1	
C418	EEVHB0J330	E.CAPACITOR 6.3V 33U	1	
C419	ECUM1E104ZFN	C.CAPACITOR CH 25V 0.1U	1	
C420	EEVHB0J330	E.CAPACITOR 6.3V 33U	1	
C421	ECUM1E104ZFN	C.CAPACITOR CH 25V 0.1U	1	
C425	EEVHB0J330	E.CAPACITOR 6.3V 33U	1	
C426	ECUM1E104ZFN	C.CAPACITOR CH 25V 0.1U	1	
C427,28	EEVHB1H1R0	E.CAPACITOR 50V 1U	2	
C429	EEVHB1C470	E.CAPACITOR 16V 47U	1	
C430	ECUX1H102JCN	C.CAPACITOR CH 50V 1000P	1	
C431	ECUM1H103KBN	C.CAPACITOR CH 50V 0.01U	1	
C432	ECUM1H221JCN	C.CAPACITOR CH 50V 220P	1	
C433	ECUM1H152KBN	C.CAPACITOR CH 50V 1500P	1	
C434	EEVHB1E4R7	E.CAPACITOR 25V 4.7U	1	
C435	ECUM1H103KBN	C.CAPACITOR CH 50V 0.01U	1	
C436,37	ECUM1E104ZFN	C.CAPACITOR CH 25V 0.1U	2	
C438	EEVHB0J330	E.CAPACITOR 6.3V 33U	1	
C439,40	ECUM1E104ZFN	C.CAPACITOR CH 25V 0.1U	2	
C441	EEVHB0J330	E.CAPACITOR 6.3V 33U	1	
C442,43	ECUM1E104ZFN	C.CAPACITOR CH 25V 0.1U	2	
C444	ECUM1H390JCN	C.CAPACITOR CH 50V 39P	1	
C445	ECUM1H080DCN	C.CAPACITOR CH 50V 8P	1	
C446	ECUM1H181JCN	C.CAPACITOR CH 50V 180P	1	
C447,48	ECUM1E104ZFN	C.CAPACITOR CH 25V 0.1U	2	
C450	EEVHB1C470	E.CAPACITOR 16V 47U	1	
C451	EEVHB0J330	E.CAPACITOR 6.3V 33U	1	
C452	ECUM1E104ZFN	C.CAPACITOR CH 25V 0.1U	1	
C453	ECUM1H390JCN	C.CAPACITOR CH 50V 39P	1	
C454	EEVHB0J330	E.CAPACITOR 6.3V 33U	1	
C455-57	ECUM1E104ZFN	C.CAPACITOR CH 25V 0.1U	3	
C458	EEVHB1H1R0	E.CAPACITOR 50V 1U	1	
C459,60	ECUM1E104ZFN	C.CAPACITOR CH 25V 0.1U	2	
C461	EEVHB0J330	E.CAPACITOR 6.3V 33U	1	
C462,63	ECUM1H103KBN	C.CAPACITOR CH 50V 0.01U	2	
C464-70	ECUM1E104ZFN	C.CAPACITOR CH 25V 0.1U	7	
C472	ECUM1E104ZFN	C.CAPACITOR CH 25V 0.1U	1	
C473	EEVHB0J330	E.CAPACITOR 6.3V 33U	1	
C474,75	ECUM1E104ZFN	C.CAPACITOR CH 25V 0.1U	2	
C476	EEVHB0J330	E.CAPACITOR 6.3V 33U	1	
C477	ECUM1E104ZFN	C.CAPACITOR CH 25V 0.1U	1	
C478	EEVHB0J330	E.CAPACITOR 6.3V 33U	1	
C479	ECUM1E104ZFN	C.CAPACITOR CH 25V 0.1U	1	
C480	ECUX1E104KBN	C.CAPACITOR CH 25V 0.1U	1	
C481	ECUM1H330JCN	C.CAPACITOR CH 50V 33P	1	
C482	ECUM1H271JCN	C.CAPACITOR CH 50V 270P	1	
C483	ECUM1H220JCN	C.CAPACITOR CH 50V 22P	1	
C484	ECUM1H680JCN	C.CAPACITOR CH 50V 68P	1	
C485	ECUM1H070DCN	C.CAPACITOR CH 50V 7P	1	
C486	ECUM1H121JCN	C.CAPACITOR CH 50V 120P	1	
C487,88	ECUM1H100DCN	C.CAPACITOR CH 50V 10P	2	
C489	ECUM1H330JCN	C.CAPACITOR CH 50V 33P	1	
C490-92	ECUX1E104KBN	C.CAPACITOR CH 25V 0.1U	3	
C493,94	ECUM1E104ZFN	C.CAPACITOR CH 25V 0.1U	2	
C496	ECUX1E104KBN	C.CAPACITOR CH 25V 0.1U	1	
C497,98	ECUM1E104ZFN	C.CAPACITOR CH 25V 0.1U	2	
C499	ECUM1H151JCN	C.CAPACITOR CH 50V 150P	1	
C501	EEVHB0J330	E.CAPACITOR 6.3V 33U	1	
C502	ECUM1E104ZFN	C.CAPACITOR CH 25V 0.1U	1	
C503	EEVHB0J330	E.CAPACITOR 6.3V 33U	1	
C504	ECUM1E104ZFN	C.CAPACITOR CH 25V 0.1U	1	
C505	EEVHB1C100	E.CAPACITOR 16V 10U	1	
C506	ECUM1E104ZFN	C.CAPACITOR CH 25V 0.1U	1	
C507	EEVHB1C100	E.CAPACITOR 16V 10U	1	
C508	ECUM1E104ZFN	C.CAPACITOR CH 25V 0.1U	1	
C509	ECUM1H121JCN	C.CAPACITOR CH 50V 120P	1	
C510	ECUM1E104ZFN	C.CAPACITOR CH 25V 0.1U	1	
C511	ECUX1H102JCN	C.CAPACITOR CH 50V 1000P	1	
C512	ECUM1H221JCN	C.CAPACITOR CH 50V 220P	1	

Ref.No.	Part No.	Part Name & Description	Pcs	Remarks
C513	ECUM1H681JCN	C.CAPACITOR CH 50V 680P	1	
C514,15	ECUM1E104ZFN	C.CAPACITOR CH 25V 0.1U	2	
C516	ECUM1H560JCN	C.CAPACITOR CH 50V 56P	1	
C518	ECUX1E104KBN	C.CAPACITOR CH 25V 0.1U	1	
C519	ECUM1E104ZFN	C.CAPACITOR CH 25V 0.1U	1	
C520	ECUM1H103KBN	C.CAPACITOR CH 50V 0.01U	1	
C522	EEVHB1C470	E.CAPACITOR 16V 47U	1	
C523	ECUM1H220JCN	C.CAPACITOR CH 50V 22P	1	
C524	ECUM1H820JCN	C.CAPACITOR CH 50V 82P	1	
C525	ECUM1H080DCN	C.CAPACITOR CH 50V 8P	1	
C526	EEVHB1C470	E.CAPACITOR 16V 47U	1	
C527	ECUM1H103KBN	C.CAPACITOR CH 50V 0.01U	1	
C528	ECUM1H470JCN	C.CAPACITOR CH 50V 47P	1	
C529	ECUM1H060DCN	C.CAPACITOR CH 50V 6P	1	
C531	ECUM1E104ZFN	C.CAPACITOR CH 25V 0.1U	1	
C532	ECUX1E104KBN	C.CAPACITOR CH 25V 0.1U	1	
C534	ECUM1H103KBN	C.CAPACITOR CH 50V 0.01U	1	
C536	ECUM1H220JCN	C.CAPACITOR CH 50V 22P	1	
C537	ECUM1H820JCN	C.CAPACITOR CH 50V 82P	1	
C538	ECUM1H060DCN	C.CAPACITOR CH 50V 6P	1	
C539	ECUM1H080DCN	C.CAPACITOR CH 50V 8P	1	
C540	ECUM1H470JCN	C.CAPACITOR CH 50V 47P	1	
C541	EEVHB1H4R7	E.CAPACITOR 50V 4.7U	1	
C542	ECUX1E104KBN	C.CAPACITOR CH 25V 0.1U	1	
C545	ECUM1H120JCN	C.CAPACITOR CH 50V 12P	1	
C550	ECUM1H101JCN	C.CAPACITOR CH 50V 100P	1	
C551	ECUM1E104ZFN	C.CAPACITOR CH 25V 0.1U	1	
C552	EEVHB0J330	E.CAPACITOR 6.3V 33U	1	
C553	ECUM1E104ZFN	C.CAPACITOR CH 25V 0.1U	1	
C554	EEVHB1C470	E.CAPACITOR 16V 47U	1	
C555	ECUM1E104ZFN	C.CAPACITOR CH 25V 0.1U	1	
C556	ECUM1H390JCN	C.CAPACITOR CH 50V 39P	1	
C557	ECUM1H181JCN	C.CAPACITOR CH 50V 180P	1	
C558,59	ECUM1E104ZFN	C.CAPACITOR CH 25V 0.1U	2	
C561	ECUM1H080DCN	C.CAPACITOR CH 50V 8P	1	
C562	ECUM1H103KBN	C.CAPACITOR CH 50V 0.01U	1	
C565,66	ECUM1H103KBN	C.CAPACITOR CH 50V 0.01U	2	
C567	ECUM1H820JCN	C.CAPACITOR CH 50V 82P	1	
C568	ECUM1H103KBN	C.CAPACITOR CH 50V 0.01U	1	
C569	ECUM1E104ZFN	C.CAPACITOR CH 25V 0.1U	1	
C570	EEVHB0J330	E.CAPACITOR 6.3V 33U	1	
C571-73	ECUM1E104ZFN	C.CAPACITOR CH 25V 0.1U	3	
C601	ECUM1H470JCN	C.CAPACITOR CH 50V 47P	1	
C602	EEVHB0J330	E.CAPACITOR 6.3V 33U	1	
C603	ECUM1E104ZFN	C.CAPACITOR CH 25V 0.1U	1	
C604	EEVHB0J330	E.CAPACITOR 6.3V 33U	1	
C605	ECUM1E104ZFN	C.CAPACITOR CH 25V 0.1U	1	
C606	ECUM1H470JCN	C.CAPACITOR CH 50V 47P	1	
C607	ECUM1E104ZFN	C.CAPACITOR CH 25V 0.1U	1	
C608	ECUM1H331JCN	C.CAPACITOR CH 50V 330P	1	
C609	ECUM1H820JCN	C.CAPACITOR CH 50V 82P	1	
C610	ECUM1E104ZFN	C.CAPACITOR CH 25V 0.1U	1	
C612	ECUM1H470JCN	C.CAPACITOR CH 50V 47P	1	
C613	EEVHP1H1R0	E.CAPACITOR 50V 1U	1	
C614	ECUX1H102JCN	C.CAPACITOR CH 50V 1000P	1	
C615	ECUM1E104ZFN	C.CAPACITOR CH 25V 0.1U	1	
C616	ECUM1H331JCN	C.CAPACITOR CH 50V 330P	1	
C617	ECUM1E104ZFN	C.CAPACITOR CH 25V 0.1U	1	
C618	ECUX1H102JCN	C.CAPACITOR CH 50V 1000P	1	
C619	ECUM1E104ZFN	C.CAPACITOR CH 25V 0.1U	1	
C621	EEVHP1H1R0	E.CAPACITOR 50V 1U	1	
C622,23	ECUM1E104ZFN	C.CAPACITOR CH 25V 0.1U	2	
C624,25	ECUM1H103KBN	C.CAPACITOR CH 50V 0.01U	2	
C626	ECUX1H102JCN	C.CAPACITOR CH 50V 1000P	1	
C627	ECUM1E104ZFN	C.CAPACITOR CH 25V 0.1U	1	
C629	ECUM1H121JCN	C.CAPACITOR CH 50V 120P	1	
C651	EEVHB0J330	E.CAPACITOR 6.3V 33U	1	
C652,53	ECUM1E104ZFN	C.CAPACITOR CH 25V 0.1U	2	
C654	EEVHB0J330	E.CAPACITOR 6.3V 33U	1	
C655	ECUM1E104ZFN	C.CAPACITOR CH 25V 0.1U	1	
C701	ECUM1E104ZFN	C.CAPACITOR CH 25V 0.1U	1	
C702,03	EEVHB0J330	E.CAPACITOR 6.3V 33U	2	
C704	ECUM1E104ZFN	C.CAPACITOR CH 25V 0.1U	1	
C705	EEVHB0J330	E.CAPACITOR 6.3V 33U	1	
C706	ECUM1E104ZFN	C.CAPACITOR CH 25V 0.1U	1	

Ref.No.	Part No.	Part Name & Description	Pcs	Remarks
C707	EEVHB0J330	E.CAPACITOR 6.3V 33U	1	
C708,09	ECUM1E104ZFN	C.CAPACITOR CH 25V 0.1U	2	
C710	ECUM1H010CCN	C.CAPACITOR CH 50V 1P	1	
C712-14	ECUM1E104ZFN	C.CAPACITOR CH 25V 0.1U	3	
C715	ECUX1E104KBN	C.CAPACITOR CH 25V 0.1U	1	
C716	ECUM1E104ZFN	C.CAPACITOR CH 25V 0.1U	1	
C717	EEVHB0J330	E.CAPACITOR 6.3V 33U	1	
C718	ECUM1E104ZFN	C.CAPACITOR CH 25V 0.1U	1	
C719	EEVHB0J330	E.CAPACITOR 6.3V 33U	1	
C720,21	ECUM1E104ZFN	C.CAPACITOR CH 25V 0.1U	2	
C722	EEVHB0J330	E.CAPACITOR 6.3V 33U	1	
C723	ECUM1E104ZFN	C.CAPACITOR CH 25V 0.1U	1	
C724	EEVHB0J330	E.CAPACITOR 6.3V 33U	1	
C725	ECUM1E104ZFN	C.CAPACITOR CH 25V 0.1U	1	
C726	EEVHB0J330	E.CAPACITOR 6.3V 33U	1	
C727	ECUM1E104ZFN	C.CAPACITOR CH 25V 0.1U	1	
C728	ECUX1E104KBN	C.CAPACITOR CH 25V 0.1U	1	
C730	EEVHB1C470	E.CAPACITOR 16V 47U	1	
C731	ECUX1E104KBN	C.CAPACITOR CH 25V 0.1U	1	
C732	ECUM1H331JCN	C.CAPACITOR CH 50V 330P	1	
C733	ECUM1H470JCN	C.CAPACITOR CH 50V 47P	1	
C734	EEVHB0J330	E.CAPACITOR 6.3V 33U	1	
C735-40	ECUM1E104ZFN	C.CAPACITOR CH 25V 0.1U	6	
C746	ECCF1H101JC	C.CAPACITOR 50V 100P	1	
C751	ECUM1E104ZFN	C.CAPACITOR CH 25V 0.1U	1	
C752,53	EEVHB0J330	E.CAPACITOR 6.3V 33U	2	
C754	ECUM1E104ZFN	C.CAPACITOR CH 25V 0.1U	1	
C755	EEVHB0J330	E.CAPACITOR 6.3V 33U	1	
C756	ECUM1E104ZFN	C.CAPACITOR CH 25V 0.1U	1	
C757	EEVHB0J330	E.CAPACITOR 6.3V 33U	1	
C758,59	ECUM1E104ZFN	C.CAPACITOR CH 25V 0.1U	2	
C762-66	ECUM1E104ZFN	C.CAPACITOR CH 25V 0.1U	5	
C768	ECUM1E104ZFN	C.CAPACITOR CH 25V 0.1U	1	
C769	EEVHB0J330	E.CAPACITOR 6.3V 33U	1	
C770,71	ECUM1E104ZFN	C.CAPACITOR CH 25V 0.1U	2	
C772	EEVHB0J330	E.CAPACITOR 6.3V 33U	1	
C773	ECUM1E104ZFN	C.CAPACITOR CH 25V 0.1U	1	
C774	EEVHB0J330	E.CAPACITOR 6.3V 33U	1	
C775	ECUM1E104ZFN	C.CAPACITOR CH 25V 0.1U	1	
C776	EEVHB1C100	E.CAPACITOR 16V 10U	1	
C777	ECUM1E104ZFN	C.CAPACITOR CH 25V 0.1U	1	
C778	ECUX1E104KBN	C.CAPACITOR CH 25V 0.1U	1	
C780	EEVHB1C470	E.CAPACITOR 16V 47U	1	
C781	ECUX1E104KBN	C.CAPACITOR CH 25V 0.1U	1	
C782	ECUM1H331JCN	C.CAPACITOR CH 50V 330P	1	
C783	ECUM1H470JCN	C.CAPACITOR CH 50V 47P	1	
C784	EEVHB0J330	E.CAPACITOR 6.3V 33U	1	
C785-87	ECUM1E104ZFN	C.CAPACITOR CH 25V 0.1U	3	
C790	ECUM1H060DCN	C.CAPACITOR CH 50V 6P	1	
C791	ECUM1H470JCN	C.CAPACITOR CH 50V 47P	1	
C792	EEVHB1C100	E.CAPACITOR 16V 10U	1	
C801	ECUM1E104ZFN	C.CAPACITOR CH 25V 0.1U	1	
C802,03	EEVHB0J330	E.CAPACITOR 6.3V 33U	2	
C804	ECUM1E104ZFN	C.CAPACITOR CH 25V 0.1U	1	
C805	EEVHB0J330	E.CAPACITOR 6.3V 33U	1	
C806	ECUM1E104ZFN	C.CAPACITOR CH 25V 0.1U	1	
C807	EEVHB0J330	E.CAPACITOR 6.3V 33U	1	
C808,09	ECUM1E104ZFN	C.CAPACITOR CH 25V 0.1U	2	
C812-16	ECUM1E104ZFN	C.CAPACITOR CH 25V 0.1U	5	
C818	ECUM1E104ZFN	C.CAPACITOR CH 25V 0.1U	1	
C819	EEVHB0J330	E.CAPACITOR 6.3V 33U	1	
C820,21	ECUM1E104ZFN	C.CAPACITOR CH 25V 0.1U	2	
C822	EEVHB0J330	E.CAPACITOR 6.3V 33U	1	
C823	ECUM1E104ZFN	C.CAPACITOR CH 25V 0.1U	1	
C824	EEVHB0J330	E.CAPACITOR 6.3V 33U	1	
C825	ECUM1E104ZFN	C.CAPACITOR CH 25V 0.1U	1	
C826	EEVHB1C100	E.CAPACITOR 16V 10U	1	
C827	ECUM1E104ZFN	C.CAPACITOR CH 25V 0.1U	1	
C828	ECUX1E104KBN	C.CAPACITOR CH 25V 0.1U	1	
C830	EEVHB1C470	E.CAPACITOR 16V 47U	1	
C831	ECUX1E104KBN	C.CAPACITOR CH 25V 0.1U	1	
C832	ECUM1H331JCN	C.CAPACITOR CH 50V 330P	1	
C833	ECUM1H470JCN	C.CAPACITOR CH 50V 47P	1	
C834	EEVHB0J330	E.CAPACITOR 6.3V 33U	1	
C835-37	ECUM1E104ZFN	C.CAPACITOR CH 25V 0.1U	3	

Ref.No.	Part No.	Part Name & Description	Pcs	Remarks
C840	ECUM1H080DCN	C.CAPACITOR CH 50V 8P	1	
C841	ECUM1H470JCN	C.CAPACITOR CH 50V 47P	1	
C842	EEVHB1C100	E.CAPACITOR 16V 10U	1	
C851-60	ECUM1E104ZFN	C.CAPACITOR CH 25V 0.1U	10	
C881-96	ECUM1E104ZFN	C.CAPACITOR CH 25V 0.1U	16	
C901-03	ECUM1E104ZFN	C.CAPACITOR CH 25V 0.1U	3	
C951	ECUM1H101JCN	C.CAPACITOR CH 50V 100P	1	
C952-56	ECUM1E104ZFN	C.CAPACITOR CH 25V 0.1U	5	
C957	ECUM1H103KBN	C.CAPACITOR CH 50V 0.01U	1	
C958	ECUX1E104KBN	C.CAPACITOR CH 25V 0.1U	1	
C959	EEVHP1HR47	E.CAPACITOR 50V 0.47U	1	
C960,61	ECUX1E104KBN	C.CAPACITOR CH 25V 0.1U	2	
C962	ECUM1E104ZFN	C.CAPACITOR CH 25V 0.1U	1	
C963	EEVHB0J330	E.CAPACITOR 6.3V 33U	1	
C964,65	ECUM1E104ZFN	C.CAPACITOR CH 25V 0.1U	2	
C966	EEVHB0J330	E.CAPACITOR 6.3V 33U	1	
C967-69	ECUM1E104ZFN	C.CAPACITOR CH 25V 0.1U	3	
C972	ECUM1E104ZFN	C.CAPACITOR CH 25V 0.1U	1	
C973	EEVHB1C470	E.CAPACITOR 16V 47U	1	
C974	ECUM1E104ZFN	C.CAPACITOR CH 25V 0.1U	1	
C975	EEVHB1C470	E.CAPACITOR 16V 47U	1	
C976	ECUM1E104ZFN	C.CAPACITOR CH 25V 0.1U	1	
C979	ECUM1E104ZFN	C.CAPACITOR CH 25V 0.1U	1	
C980	EEVHB0J330	E.CAPACITOR 6.3V 33U	1	
C981,82	ECUM1E104ZFN	C.CAPACITOR CH 25V 0.1U	2	
C983	EEVHB0J330	E.CAPACITOR 6.3V 33U	1	
C984-86	ECUM1E104ZFN	C.CAPACITOR CH 25V 0.1U	3	
D301,02	MA152K	DIODE	2	
D351,52	MA152K	DIODE	2	
D401	MA152WK	DIODE	1	
D551	MA152WK	DIODE	1	
D601	MA335-R	DIODE	1	
D602	MA152WA	DIODE	1	
D603	MA152K	DIODE	1	
D701,02	MA152K	DIODE	2	
D751,52	MA152K	DIODE	2	
D801,02	MA152K	DIODE	2	
D901	MA152K	DIODE	1	
FL101	VLF1016A223	FILTER	1	
FL103	VLF1016A223	FILTER	1	
FL301	VLF1294	FILTER	1	J0E6754B0001
FL351	VLF1016A223	FILTER	1	
FL451	VLF1016A223	FILTER	1	
FL601,02	VLF1016A223	FILTER	2	
FL701	VLF1294	FILTER	1	J0E6754B0001
FL702	VLF1016A223	FILTER	1	
FL752	VLF1463	FILTER	1	J0E3374B0002
FL802	VLF1463	FILTER	1	J0E3374B0002
FL851,52	VLF1016A223	FILTER	2	
FL981,82	VLF1016A223	FILTER	2	
IC101	AN78N09	IC	1	
IC102	AN78N05	IC	1	
IC103	AN79N09	IC	1	
IC104	AN79N05	IC	1	
IC154	MC10H125M	IC	1	
IC156	74F244SJ	IC	1	
IC201	VSI2496	PLD	1	
IC204	74F245SJ	IC	1	C0JBCZ000183
IC207,08	UPD71055GB	IC	2	
IC209,10	SN74S1051NS	IC	2	
IC251	VSI2807	IC	1	
IC301	EL2082CS	IC	1	C0ABGB000004
IC302	NJM082BM	IC	1	C0ABEB000017
IC303	DAC10GS	IC	1	
IC351	AD818AR	IC	1	
IC352	NJM084M	IC	1	C0ABFB000008
IC353	CXD1175AM	IC	1	
IC354,55	NJM78L05UA	IC	2	C0CBADC00010
IC356	NJM79L05UA	IC	1	
IC401	UPC1862GS	IC	1	
IC402,03	NJM78L05UA	IC	2	C0CBADC00010
IC404	NJM79L05UA	IC	1	

Ref.No.	Part No.	Part Name & Description	Pcs	Remarks
IC405	AN91A12S	IC	1	
IC406	TC4W53F	IC	1	C0JBAR000225
IC407	MC74HC00AF	IC	1	
IC450	AD8047AR	IC	1	
IC451	UPD6486GF3BA	IC	1	C1AB00000595
IC452,53	C3HBBC000010	IC	2	
IC454	NJM78L05UA	IC	1	C0CBADC00010
IC455	NJM79L05UA	IC	1	
IC458	AD8047AR	IC	1	
IC460	C3HBBC000010	IC	1	
IC461	MB40760PF	IC	1	C0FABF000004
IC462	VSI2716	IC	1	
IC463	NJM78L05UA	IC	1	C0CBADC00010
IC501	SN74LS221NS	IC	1	
IC502	MM74HC221AM	IC	1	C0JBAM000078
IC503	UPD65013BC16	IC	1	C1ZBZ0001325
IC504,05	NJM1496M	IC	2	
IC507	MC74HC4053F	IC	1	
IC508	MC74HC04AF	IC	1	
IC509,10	NJM082BM	IC	2	C0ABEB000017
IC511	NJM78L05UA	IC	1	C0CBADC00010
IC512	NJM79L05UA	IC	1	
IC517	NJM78L05UA	IC	1	C0CBADC00010
IC518	NJM79L05UA	IC	1	
IC552	AN91A12S	IC	1	
IC553	NJM78L05UA	IC	1	C0CBADC00010
IC554	NJM79L05UA	IC	1	
IC555	MN53015VZW	IC	1	
IC601	SN74LS221NS	IC	1	
IC602	MC74HC00AF	IC	1	
IC603	NJM082BM	IC	1	C0ABEB000017
IC604	MC74HC74AF	IC	1	
IC605	TC4S584F	IC	1	
IC606	TC4W53F	IC	1	C0JBAR000225
IC607	MC74HC244AF	IC	1	C0JBAZ001373
IC608	SN74LS221NS	IC	1	
IC701	MC74HC4053F	IC	1	
IC702	AD848JR	IC	1	C0ABAB000067
IC703	NJM084M	IC	1	C0ABFB000008
IC704	CXD1175AM	IC	1	
IC705,06	NJM78L05UA	IC	2	C0CBADC00010
IC707	NJM79L05UA	IC	1	
IC751	MC74HC4053F	IC	1	
IC752	AD848JR	IC	1	C0ABAB000067
IC753	NJM084M	IC	1	C0ABFB000008
IC754	MB40568PF	IC	1	
IC755,56	NJM78L05UA	IC	2	C0CBADC00010
IC757	NJM79L05UA	IC	1	
IC758	AN78N09	IC	1	
IC759	T74HCT541AF	IC	1	
IC801	MC74HC4053F	IC	1	
IC802	AD848JR	IC	1	C0ABAB000067
IC803	NJM084M	IC	1	C0ABFB000008
IC804	MB40568PF	IC	1	
IC805,06	NJM78L05UA	IC	2	C0CBADC00010
IC807	NJM79L05UA	IC	1	
IC808	AN78N09	IC	1	
IC809	T74HCT541AF	IC	1	
IC851	T160G70-1601	IC	1	
IC852,53	C3HBBC000010	IC	2	
IC901-03	74F244SJ	IC	3	
IC904	NJM78L05UA	IC	1	C0CBADC00010
IC905	AN3296S	IC	1	
IC981	T160G41-1437	IC	1	
IC982,83	C3HBBC000010	IC	2	
IC984	VSI2679	IC	1	
IC985,86	74F244SJ	IC	2	
L1,L2	VLP0133	COIL	2	
L101,02	VLP0133	COIL	2	
L301-04	VLQ0319K101	COIL 100UH	4	G1C101K00022
L351	VLQ0163J101	COIL 100UH	1	
L352	VLQ0319K101	COIL 100UH	1	G1C101K00022
L401	VLQ0163J150	COIL 15UH	1	
L402-05	VLQ0319K100	COIL 10UH	4	G1C100K00023

Ref.No.	Part No.	Part Name & Description	Pcs	Remarks
L406	VLQ0133J471	COIL 470UH	1	G1C471J00001
L407	VLQ0319K101	COIL 100UH	1	G1C101K00022
L451	VLQ0319K101	COIL 100UH	1	G1C101K00022
L452	VLQ0319K100	COIL 10UH	1	G1C100K00023
L454	VLQ0163J270	COIL 27UH	1	
L455	VLQ0163J6R8	COIL 6.8UH	1	G1C6R8J00007
L456	VLQ0163J5R6	COIL 5.6UH	1	
L457	VLQ0319K101	COIL 100UH	1	G1C101K00022
L458,59	VLQ0163J2R2	COIL 2.2UH	2	G1C2R2J00009
L501-03	VLQ0319K101	COIL 100UH	3	G1C101K00022
L505,06	VLQ0163J680	COIL 68UH	2	
L507	VLQ0319K101	COIL 100UH	1	G1C101K00022
L553	VLQ0133J471	COIL 470UH	1	G1C471J00001
L601	VLQ0163J3R3	COIL 3.3UH	1	
L651,52	VLQ0319K101	COIL 100UH	2	G1C101K00022
L703	VLQ0319K101	COIL 100UH	1	G1C101K00022
L704	VLQ0133J821	COIL 820UH	1	
L754	VLQ0133J821	COIL 820UH	1	
L804	VLQ0133J821	COIL 820UH	1	
P1,P2	VJP3454B096	CONNECTOR (MALE)	2	K1KA96B00021
Q301	2SB709A-R	TRANSISTOR	1	
Q302,03	2SD601A-R	TRANSISTOR	2	
Q351	2SD601A-R	TRANSISTOR	1	
Q352	2SB709A-R	TRANSISTOR	1	
Q353	2SK198-R	TRANSISTOR	1	2SK01980R
Q401	2SD601A-R	TRANSISTOR	1	
Q404	2SB709A-R	TRANSISTOR	1	
Q405,06	2SD601A-R	TRANSISTOR	2	
Q452	2SD601A-R	TRANSISTOR	1	
Q454	2SB709A-R	TRANSISTOR	1	
Q455	2SD601A-R	TRANSISTOR	1	
Q501,02	2SD601A-R	TRANSISTOR	2	
Q503	2SB709A-R	TRANSISTOR	1	
Q504,05	2SD601A-R	TRANSISTOR	2	
Q507,08	2SD601A-R	TRANSISTOR	2	
Q509	2SB709A-R	TRANSISTOR	1	
Q510,11	2SD601A-R	TRANSISTOR	2	
Q518	2SD601A-R	TRANSISTOR	1	
Q601	2SC3757-R	TRANSISTOR	1	
Q602,03	2SA1226E34	TRANSISTOR	2	
Q604	2SC3757-R	TRANSISTOR	1	
Q651	2SB709A-R	TRANSISTOR	1	
Q652	2SD601A-R	TRANSISTOR	1	
Q653	2SB709A-R	TRANSISTOR	1	
Q654	2SD601A-R	TRANSISTOR	1	
Q655	XN1213	TRANSISTOR-RESISTOR	1	
Q656	2SB709A-R	TRANSISTOR	1	
Q657	2SD601A-R	TRANSISTOR	1	
Q658	2SC3757-R	TRANSISTOR	1	
Q701	2SD601A-R	TRANSISTOR	1	
Q702	2SB709A-R	TRANSISTOR	1	
Q703	2SD601A-R	TRANSISTOR	1	
Q704	2SB709A-R	TRANSISTOR	1	
Q705	2SK198-R	TRANSISTOR	1	2SK01980R
Q706	2SB709A-R	TRANSISTOR	1	
Q707	2SD601A-R	TRANSISTOR	1	
Q751	2SD601A-R	TRANSISTOR	1	
Q752	2SB709A-R	TRANSISTOR	1	
Q753	2SD601A-R	TRANSISTOR	1	
Q754	2SB709A-R	TRANSISTOR	1	
Q755	2SK198-R	TRANSISTOR	1	2SK01980R
Q756	2SD601A-R	TRANSISTOR	1	
Q801	2SD601A-R	TRANSISTOR	1	
Q802	2SB709A-R	TRANSISTOR	1	
Q803	2SD601A-R	TRANSISTOR	1	
Q804	2SB709A-R	TRANSISTOR	1	
Q805	2SK198-R	TRANSISTOR	1	2SK01980R
Q806	2SD601A-R	TRANSISTOR	1	
Q901,02	2SD601A-R	TRANSISTOR	2	
QR201	MUN2212	TRANSISTOR-RESISTOR	1	
QR551	MUN2212	TRANSISTOR-RESISTOR	1	
QR701,02	MUN2213	TRANSISTOR-RESISTOR	2	

Ref.No.	Part No.	Part Name & Description	Pcs	Remarks
QR751	MUN2213	TRANSISTOR-RESISTOR	1	
QR801	MUN2213	TRANSISTOR-RESISTOR	1	
R7-34	ERJ6GEY0R00	M.RESISTOR CH 1/10W 0	28	
R37-53	ERJ6GEY0R00	M.RESISTOR CH 1/10W 0	17	
R56-81	ERJ6GEY0R00	M.RESISTOR CH 1/10W 0	26	
R98	ERJ6GEYG101	M.RESISTOR CH 1/10W 100	1	
R100	ERJ6GEY0R00	M.RESISTOR CH 1/10W 0	1	
R162	ERJ6GEYG101	M.RESISTOR CH 1/10W 100	1	
R165,66	ERJ6GEYG101	M.RESISTOR CH 1/10W 100	2	
R168,69	ERJ6GEYG103	M.RESISTOR CH 1/10W 10K	2	
R172	ERJ6GEYG103	M.RESISTOR CH 1/10W 10K	1	
R173	ERJ6GEY0R00	M.RESISTOR CH 1/10W 0	1	
R175	ERJ6GEY0R00	M.RESISTOR CH 1/10W 0	1	
R177-80	ERJ6GEYG391	M.RESISTOR CH 1/10W 390	4	
R181	ERJ6GEYG332	M.RESISTOR CH 1/10W 3.3K	1	
R182-91	ERJ6GEYG391	M.RESISTOR CH 1/10W 390	10	
R192	ERJ6GEYG332	M.RESISTOR CH 1/10W 3.3K	1	
R193,94	ERJ6GEYG101	M.RESISTOR CH 1/10W 100	2	
R201,02	ERJ6GEYG103	M.RESISTOR CH 1/10W 10K	2	
R208	ERJ6GEYG103	M.RESISTOR CH 1/10W 10K	1	
R214,15	ERJ6GEYG101	M.RESISTOR CH 1/10W 100	2	
R216	ERJ6GEYG103	M.RESISTOR CH 1/10W 10K	1	
R219,20	ERJ6GEY0R00	M.RESISTOR CH 1/10W 0	2	
R221	ERJ6GEYG223	M.RESISTOR CH 1/10W 22K	1	
R222	ERJ6GEYF333	M.RESISTOR CH 1/10W 33K	1	
R223	ERJ6GEYG564	M.RESISTOR CH 1/10W 560K	1	
R224	ERJ6GEYG102	M.RESISTOR CH 1/10W 1K	1	
R225	ERJ6GEYG683	M.RESISTOR CH 1/10W 68K	1	
R226	ERJ6GEYG331	M.RESISTOR CH 1/10W 330	1	
R227	ERJ6GEYJ684	M.RESISTOR CH 1/10W 680K	1	
R228	ERJ6GEYG753	M.RESISTOR CH 1/10W 75	1	
R229	ERJ6GEYG104	M.RESISTOR CH 1/10W 100K	1	
R230	ERJ6GEYG103	M.RESISTOR CH 1/10W 10K	1	
R231	ERJ6GEYG682	M.RESISTOR CH 1/10W 6.8K	1	
R232	ERJ6GEYG153	M.RESISTOR CH 1/10W 15K	1	
R233	ERJ6GEYF473	M.RESISTOR CH 1/10W 47K	1	
R301	ERJ6GEYG562	M.RESISTOR CH 1/10W 5.6K	1	
R302	ERJ6GEYG102	M.RESISTOR CH 1/10W 1K	1	
R303	ERJ6GEYG101	M.RESISTOR CH 1/10W 100	1	
R304,05	ERJ6GEYG331	M.RESISTOR CH 1/10W 330	2	
R306	ERJ6GEYG102	M.RESISTOR CH 1/10W 1K	1	
R307	ERJ6RBD102	M.RESISTOR CH 1/10W 1K	1	
R308	ERJ6RBD561	M.RESISTOR CH 1/10W 560	1	
R309	ERJ6GEYG183	M.RESISTOR CH 1/10W 18K	1	
R310	ERJ6GEY0R00	M.RESISTOR CH 1/10W 0	1	
R311	ERJ6RBD102	M.RESISTOR CH 1/10W 1K	1	
R312	ERJ6RBD101	M.RESISTOR CH 1/10W 100	1	
R315,16	ERJ6GEYF822	M.RESISTOR CH 1/10W 8.2K	2	
R317	ERJ6GEY0R00	M.RESISTOR CH 1/10W 0	1	
R318	ERJ6GEYF333	M.RESISTOR CH 1/10W 33K	1	
R352	ERJ6GEYG101	M.RESISTOR CH 1/10W 100	1	
R353	ERJ6GEY0R00	M.RESISTOR CH 1/10W 0	1	
R354	ERJ6GEYG152	M.RESISTOR CH 1/10W 1.5K	1	
R355	ERJ6GEYF561	M.RESISTOR CH 1/10W 560	1	
R356	ERJ6GEYG101	M.RESISTOR CH 1/10W 100	1	
R358	ERJ6GEYG122	M.RESISTOR CH 1/10W 1.2K	1	
R359	ERJ6GEYG101	M.RESISTOR CH 1/10W 100	1	
R360	ERJ6GEY0R00	M.RESISTOR CH 1/10W 0	1	
R361	ERJ6GEYG103	M.RESISTOR CH 1/10W 10K	1	
R362	ERJ6GEYG102	M.RESISTOR CH 1/10W 1K	1	
R363	ERJ6GEYG394	M.RESISTOR CH 1/10W 390K	1	
R364	ERJ6GEYG154	M.RESISTOR CH 1/10W 150K	1	
R365	ERJ6GEYG102	M.RESISTOR CH 1/10W 1K	1	
R366	ERJ6GEYG101	M.RESISTOR CH 1/10W 100	1	
R369	ERJ6GEYG101	M.RESISTOR CH 1/10W 100	1	
R370	ERJ6GEYG103	M.RESISTOR CH 1/10W 10K	1	
R371	ERJ6GEYG682	M.RESISTOR CH 1/10W 6.8K	1	
R401	ERJ6GEYG681	M.RESISTOR CH 1/10W 680	1	
R402	ERJ6GEYG103	M.RESISTOR CH 1/10W 10K	1	
R403	ERJ6GEYG681	M.RESISTOR CH 1/10W 680	1	
R404	ERJ6GEYG103	M.RESISTOR CH 1/10W 10K	1	
R407	ERJ6GEYG105	M.RESISTOR CH 1/10W 1M	1	
R412	ERJ6GEYG102	M.RESISTOR CH 1/10W 1K	1	
R413	ERJ6GEYF333	M.RESISTOR CH 1/10W 33K	1	

Ref.No.	Part No.	Part Name & Description	Pcs	Remarks
R414	ERJ6GEYG103	M.RESISTOR CH 1/10W 10K	1	
R415	ERJ6GEYG221	M.RESISTOR CH 1/10W 220	1	
R416	ERJ6GEYF473	M.RESISTOR CH 1/10W 47K	1	
R417	ERJ6GEYG221	M.RESISTOR CH 1/10W 220	1	
R418	ERJ6GEYF473	M.RESISTOR CH 1/10W 47K	1	
R419	ERJ6GEYG104	M.RESISTOR CH 1/10W 100K	1	
R420	ERJ6GEYG272	M.RESISTOR CH 1/10W 2.7K	1	
R421	ERJ6GEYG271	M.RESISTOR CH 1/10W 270	1	
R422	ERJ6GEYG222	M.RESISTOR CH 1/10W 2.2K	1	
R423,24	ERJ6GEYG103	M.RESISTOR CH 1/10W 10K	2	
R425	ERJ6GEYG152	M.RESISTOR CH 1/10W 1.5K	1	
R426	ERJ6GEYF822	M.RESISTOR CH 1/10W 8.2K	1	
R427	ERDS2TJ392	C.RESISTOR 1/4W 3.9K	1	D0AE392JA045
R431	ERJ6GEY0R00	M.RESISTOR CH 1/10W 0	1	
R432	ERJ6GEYG102	M.RESISTOR CH 1/10W 1K	1	
R433	ERJ6GEYG222	M.RESISTOR CH 1/10W 2.2K	1	
R436	ERJ6GEYG224	M.RESISTOR CH 1/10W 220K	1	
R437	ERJ6GEYJ684	M.RESISTOR CH 1/10W 680K	1	
R438-40	ERJ6GEYG103	M.RESISTOR CH 1/10W 10K	3	
R441	ERJ6GEYG562	M.RESISTOR CH 1/10W 5.6K	1	
R452	ERJ6GEYG332	M.RESISTOR CH 1/10W 3.3K	1	
R453	ERJ6GEYG102	M.RESISTOR CH 1/10W 1K	1	
R454	ERJ6RED330	M.RESISTOR CH 1/10W 33	1	
R455,56	ERJ6GEYG102	M.RESISTOR CH 1/10W 1K	2	
R457-60	ERJ6GEY0R00	M.RESISTOR CH 1/10W 0	4	
R463	ERJ6GEY0R00	M.RESISTOR CH 1/10W 0	1	
R465	ERJ6GEY0R00	M.RESISTOR CH 1/10W 0	1	
R466	ERJ6RBD162	M.RESISTOR CH 1/10W 1.6K	1	
R468	ERJ6GEYG391	M.RESISTOR CH 1/10W 390	1	
R469	ERJ6GEYG103	M.RESISTOR CH 1/10W 10K	1	
R471	ERJ6GEYG102	M.RESISTOR CH 1/10W 1K	1	
R473	ERJ6GEYG331	M.RESISTOR CH 1/10W 330	1	
R474	ERJ6GEYG102	M.RESISTOR CH 1/10W 1K	1	
R475	ERJ6GEYG101	M.RESISTOR CH 1/10W 100	1	
R479	ERJ6GEYG221	M.RESISTOR CH 1/10W 220	1	
R480	ERJ6GEYG101	M.RESISTOR CH 1/10W 100	1	
R481	ERJ6GEYG331	M.RESISTOR CH 1/10W 330	1	
R482	ERJ6GEYG103	M.RESISTOR CH 1/10W 10K	1	
R484,85	ERJ6GEYG101	M.RESISTOR CH 1/10W 100	2	
R486	ERJ6GEYG271	M.RESISTOR CH 1/10W 270	1	
R492	ERJ6GEYG101	M.RESISTOR CH 1/10W 100	1	
R493	ERJ6GEYG621	M.RESISTOR CH 1/10W 620	1	
R494	ERJ6GEYG103	M.RESISTOR CH 1/10W 10K	1	
R495	ERJ6GEYG391	M.RESISTOR CH 1/10W 390	1	
R496,97	ERJ6GEY0R00	M.RESISTOR CH 1/10W 0	2	
R498	ERJ6GEYG102	M.RESISTOR CH 1/10W 1K	1	
R499	ERJ6RBD471	M.RESISTOR CH 1/10W 470	1	
R500	ERJ6GEYG272	M.RESISTOR CH 1/10W 2.7K	1	
R501	ERJ6GEYG183	M.RESISTOR CH 1/10W 18K	1	
R502	ERJ6GEYF333	M.RESISTOR CH 1/10W 33K	1	
R503	ERJ6GEYG223	M.RESISTOR CH 1/10W 22K	1	
R504	ERJ6GEYG471	M.RESISTOR CH 1/10W 470	1	
R505,06	ERJ6GEY0R00	M.RESISTOR CH 1/10W 0	2	
R510,11	ERJ6GEYG222	M.RESISTOR CH 1/10W 2.2K	2	
R512	ERJ6GEYG102	M.RESISTOR CH 1/10W 1K	1	
R513	ERJ6GEYF472	M.RESISTOR CH 1/10W 4.7K	1	
R514	ERJ6GEYG101	M.RESISTOR CH 1/10W 100	1	
R516	ERJ6GEYG102	M.RESISTOR CH 1/10W 1K	1	
R517	ERJ6GEYF561	M.RESISTOR CH 1/10W 560	1	
R518	ERJ6GEYG102	M.RESISTOR CH 1/10W 1K	1	
R519	ERJ6GEYF822	M.RESISTOR CH 1/10W 8.2K	1	
R520,21	ERJ6GEYG332	M.RESISTOR CH 1/10W 3.3K	2	
R522,23	ERJ6GEYG121	M.RESISTOR CH 1/10W 120	2	
R524	ERJ6GEYG101	M.RESISTOR CH 1/10W 100	1	
R525	ERJ6GEYG222	M.RESISTOR CH 1/10W 2.2K	1	
R526	ERJ6GEYG102	M.RESISTOR CH 1/10W 1K	1	
R527	ERJ6GEYG152	M.RESISTOR CH 1/10W 1.5K	1	
R528	ERJ6GEYG470	M.RESISTOR CH 1/10W 47	1	
R529	ERJ6GEYG152	M.RESISTOR CH 1/10W 1.5K	1	
R530	ERJ6GEYF561	M.RESISTOR CH 1/10W 560	1	
R531	ERJ6GEYG470	M.RESISTOR CH 1/10W 47	1	
R532	ERJ6RBD102	M.RESISTOR CH 1/10W 1K	1	
R533	ERJ6GEYF472	M.RESISTOR CH 1/10W 4.7K	1	
R537	ERJ6GEYG101	M.RESISTOR CH 1/10W 100	1	
R538	ERJ6GEYF472	M.RESISTOR CH 1/10W 4.7K	1	

Ref.No.	Part No.	Part Name & Description	Pcs	Remarks
R539	ERJ6GEYG103	M.RESISTOR CH 1/10W 10K	1	
R540	ERJ6GEYG101	M.RESISTOR CH 1/10W 100	1	
R541	ERJ6GEY0R00	M.RESISTOR CH 1/10W 0	1	
R542	ERJ6GEYG821	M.RESISTOR CH 1/10W 820	1	
R543,44	ERJ6GEYG102	M.RESISTOR CH 1/10W 1K	2	
R545	ERJ6GEYF822	M.RESISTOR CH 1/10W 8.2K	1	
R546,47	ERJ6GEYG332	M.RESISTOR CH 1/10W 3.3K	2	
R548,49	ERJ6GEYG121	M.RESISTOR CH 1/10W 120	2	
R550	ERJ6GEYG153	M.RESISTOR CH 1/10W 15K	1	
R558	ERJ6GEYG222	M.RESISTOR CH 1/10W 2.2K	1	
R559	ERJ6GEYG102	M.RESISTOR CH 1/10W 1K	1	
R565	ERJ6GEYG224	M.RESISTOR CH 1/10W 220K	1	
R566	ERJ6GEYJ684	M.RESISTOR CH 1/10W 680K	1	
R567-70	ERJ6GEYG103	M.RESISTOR CH 1/10W 10K	4	
R575	ERDS2TJ392	C.RESISTOR 1/4W 3.9K	1	D0AE392JA045
R601	ERJ6GEYG103	M.RESISTOR CH 1/10W 10K	1	
R602	ERJ6GEYG222	M.RESISTOR CH 1/10W 2.2K	1	
R603	ERJ6GEYG682	M.RESISTOR CH 1/10W 6.8K	1	
R604	ERJ6GEYF472	M.RESISTOR CH 1/10W 4.7K	1	
R605	ERJ6GEYG102	M.RESISTOR CH 1/10W 1K	1	
R606,07	ERJ6GEYF472	M.RESISTOR CH 1/10W 4.7K	2	
R608,09	ERJ6GEYG222	M.RESISTOR CH 1/10W 2.2K	2	
R610	ERJ6GEYG392	M.RESISTOR CH 1/10W 3.9K	1	
R611	ERJ6GEYG332	M.RESISTOR CH 1/10W 3.3K	1	
R612,13	ERJ6GEYG682	M.RESISTOR CH 1/10W 6.8K	2	
R614	ERJ6GEYG223	M.RESISTOR CH 1/10W 22K	1	
R615	ERJ6GEYG682	M.RESISTOR CH 1/10W 6.8K	1	
R616	ERJ6GEYG223	M.RESISTOR CH 1/10W 22K	1	
R617	ERJ6GEYG332	M.RESISTOR CH 1/10W 3.3K	1	
R618	ERJ6GEYG153	M.RESISTOR CH 1/10W 15K	1	
R619	ERJ6GEYG681	M.RESISTOR CH 1/10W 680	1	
R620,21	ERJ6GEYG152	M.RESISTOR CH 1/10W 1.5K	2	
R622	ERJ6GEYG103	M.RESISTOR CH 1/10W 10K	1	
R623	ERJ6GEYG104	M.RESISTOR CH 1/10W 100K	1	
R624	ERJ6GEYG152	M.RESISTOR CH 1/10W 1.5K	1	
R625	ERJ6GEYG683	M.RESISTOR CH 1/10W 68K	1	
R626	ERJ6GEYG101	M.RESISTOR CH 1/10W 100	1	
R631	ERJ6GEY0R00	M.RESISTOR CH 1/10W 0	1	
R651	ERJ6GEYG152	M.RESISTOR CH 1/10W 1.5K	1	
R652	ERJ6GEYG562	M.RESISTOR CH 1/10W 5.6K	1	
R653	ERJ6GEYG152	M.RESISTOR CH 1/10W 1.5K	1	
R657	ERJ6GEYG102	M.RESISTOR CH 1/10W 1K	1	
R658	ERJ6GEYG152	M.RESISTOR CH 1/10W 1.5K	1	
R659	ERJ6GEYG122	M.RESISTOR CH 1/10W 1.2K	1	
R660	ERJ6GEYG272	M.RESISTOR CH 1/10W 2.7K	1	
R661	ERJ6GEYG152	M.RESISTOR CH 1/10W 1.5K	1	
R663	ERJ6GEYG102	M.RESISTOR CH 1/10W 1K	1	
R664	ERJ6GEYG152	M.RESISTOR CH 1/10W 1.5K	1	
R665	ERJ6RBD122	M.RESISTOR CH 1/10W 1.2K	1	
R666	ERJ6GEYG272	M.RESISTOR CH 1/10W 2.7K	1	
R667	ERJ6GEYG152	M.RESISTOR CH 1/10W 1.5K	1	
R668	ERJ6GEYG102	M.RESISTOR CH 1/10W 1K	1	
R669	ERJ6GEYG101	M.RESISTOR CH 1/10W 100	1	
R670	ERJ6GEYF473	M.RESISTOR CH 1/10W 47K	1	
R671,72	ERJ6GEYG103	M.RESISTOR CH 1/10W 10K	2	
R701	ERJ6GEYG103	M.RESISTOR CH 1/10W 10K	1	
R702	ERJ6GEYG102	M.RESISTOR CH 1/10W 1K	1	
R703	ERJ6GEYG331	M.RESISTOR CH 1/10W 330	1	
R704	ERJ6GEYG152	M.RESISTOR CH 1/10W 1.5K	1	
R707	ERJ6GEYG101	M.RESISTOR CH 1/10W 100	1	
R708	ERJ6GEYJ241	M.RESISTOR CH 1/10W 240	1	
R711	ERJ6GEYG122	M.RESISTOR CH 1/10W 1.2K	1	
R712	ERJ6GEYG101	M.RESISTOR CH 1/10W 100	1	
R713	ERJ6GEY0R00	M.RESISTOR CH 1/10W 0	1	
R714	ERJ6GEYF333	M.RESISTOR CH 1/10W 33K	1	
R715,16	ERJ6GEYG102	M.RESISTOR CH 1/10W 1K	2	
R717	ERJ6GEYG101	M.RESISTOR CH 1/10W 100	1	
R718	ERJ6GEYG394	M.RESISTOR CH 1/10W 390K	1	
R719	ERJ6GEYG154	M.RESISTOR CH 1/10W 150K	1	
R720,21	ERJ6GEYG105	M.RESISTOR CH 1/10W 1M	2	
R722	ERJ6GEYG101	M.RESISTOR CH 1/10W 100	1	
R723	ERJ6GEYG103	M.RESISTOR CH 1/10W 10K	1	
R724	ERJ6GEYG222	M.RESISTOR CH 1/10W 2.2K	1	
R725	ERJ6GEYG152	M.RESISTOR CH 1/10W 1.5K	1	
R726	ERJ6GEYG331	M.RESISTOR CH 1/10W 330	1	

Ref.No.	Part No.	Part Name & Description	Pcs	Remarks
R727	ERJ6GEYG101	M.RESISTOR CH 1/10W 100	1	
R728	ERJ6GEYG102	M.RESISTOR CH 1/10W 1K	1	
R729	ERJ6GEYG221	M.RESISTOR CH 1/10W 220	1	
R730	ERJ6GEYG122	M.RESISTOR CH 1/10W 1.2K	1	
R731	ERJ6GEYF822	M.RESISTOR CH 1/10W 8.2K	1	
R734	ERJ6GEYG102	M.RESISTOR CH 1/10W 1K	1	
R735,36	ERJ6GEYG101	M.RESISTOR CH 1/10W 100	2	
R751	ERJ6RBD823	M.RESISTOR CH 1/10W 82K	1	
R752	ERJ6GEYG152	M.RESISTOR CH 1/10W 1.5K	1	
R753	ERJ6GEYG471	M.RESISTOR CH 1/10W 470	1	
R754	ERJ6GEYG152	M.RESISTOR CH 1/10W 1.5K	1	
R757	ERJ6GEYG101	M.RESISTOR CH 1/10W 100	1	
R758	ERJ6GEYG391	M.RESISTOR CH 1/10W 390	1	
R761	ERJ6GEYG122	M.RESISTOR CH 1/10W 1.2K	1	
R762	ERJ6GEYG101	M.RESISTOR CH 1/10W 100	1	
R763,64	ERJ6GEYF123	M.RESISTOR CH 1/10W 12K	2	
R765,66	ERJ6GEYG102	M.RESISTOR CH 1/10W 1K	2	
R767	ERJ6GEYG101	M.RESISTOR CH 1/10W 100	1	
R768	ERJ6GEYG394	M.RESISTOR CH 1/10W 390K	1	
R769	ERJ6GEYJ274	M.RESISTOR CH 1/10W 270K	1	
R770,71	ERJ6GEYG105	M.RESISTOR CH 1/10W 1M	2	
R772	ERJ6GEYG101	M.RESISTOR CH 1/10W 100	1	
R773	ERJ6GEYG103	M.RESISTOR CH 1/10W 10K	1	
R774	ERJ6GEYG222	M.RESISTOR CH 1/10W 2.2K	1	
R775	ERJ6GEYG272	M.RESISTOR CH 1/10W 2.7K	1	
R776	ERJ6GEYG471	M.RESISTOR CH 1/10W 470	1	
R777	ERJ6GEYG152	M.RESISTOR CH 1/10W 1.5K	1	
R778	ERJ6GEYF561	M.RESISTOR CH 1/10W 560	1	
R779	ERJ6GEYG152	M.RESISTOR CH 1/10W 1.5K	1	
R780	ERJ6RBD561	M.RESISTOR CH 1/10W 560	1	
R781	ERJ6RBD563	M.RESISTOR CH 1/10W 56K	1	
R782	ERJ6RED224	M.RESISTOR CH 1/10W 220K	1	
R783	ERJ6GEYG272	M.RESISTOR CH 1/10W 2.7K	1	
R784-91	ERJ6GEYG102	M.RESISTOR CH 1/10W 1K	8	
R801	ERJ6RBD823	M.RESISTOR CH 1/10W 82K	1	
R802	ERJ6GEYG152	M.RESISTOR CH 1/10W 1.5K	1	
R803	ERJ6GEYG471	M.RESISTOR CH 1/10W 470	1	
R804	ERJ6GEYG152	M.RESISTOR CH 1/10W 1.5K	1	
R807	ERJ6GEYG101	M.RESISTOR CH 1/10W 100	1	
R808	ERJ6GEYG391	M.RESISTOR CH 1/10W 390	1	
R811	ERJ6GEYG122	M.RESISTOR CH 1/10W 1.2K	1	
R812	ERJ6GEYG101	M.RESISTOR CH 1/10W 100	1	
R813,14	ERJ6GEYF123	M.RESISTOR CH 1/10W 12K	2	
R815,16	ERJ6GEYG102	M.RESISTOR CH 1/10W 1K	2	
R817	ERJ6GEYG101	M.RESISTOR CH 1/10W 100	1	
R818	ERJ6GEYG394	M.RESISTOR CH 1/10W 390K	1	
R819	ERJ6GEYJ274	M.RESISTOR CH 1/10W 270K	1	
R820,21	ERJ6GEYG105	M.RESISTOR CH 1/10W 1M	2	
R822	ERJ6GEYG101	M.RESISTOR CH 1/10W 100	1	
R823	ERJ6GEYG103	M.RESISTOR CH 1/10W 10K	1	
R824	ERJ6GEYG222	M.RESISTOR CH 1/10W 2.2K	1	
R825	ERJ6GEYG272	M.RESISTOR CH 1/10W 2.7K	1	
R826	ERJ6GEYG471	M.RESISTOR CH 1/10W 470	1	
R827	ERJ6GEYG152	M.RESISTOR CH 1/10W 1.5K	1	
R828	ERJ6GEYF561	M.RESISTOR CH 1/10W 560	1	
R829	ERJ6GEYG152	M.RESISTOR CH 1/10W 1.5K	1	
R830	ERJ6RBD561	M.RESISTOR CH 1/10W 560	1	
R831	ERJ6RBD563	M.RESISTOR CH 1/10W 56K	1	
R832	ERJ6RED224	M.RESISTOR CH 1/10W 220K	1	
R833	ERJ6GEYG272	M.RESISTOR CH 1/10W 2.7K	1	
R834-41	ERJ6GEYG102	M.RESISTOR CH 1/10W 1K	8	
R854-57	ERJ6GEYG391	M.RESISTOR CH 1/10W 390	4	
R858	ERJ6GEYG332	M.RESISTOR CH 1/10W 3.3K	1	
R859-68	ERJ6GEYG391	M.RESISTOR CH 1/10W 390	10	
R869	ERJ6GEYG332	M.RESISTOR CH 1/10W 3.3K	1	
R872	ERJ6GEY0R00	M.RESISTOR CH 1/10W 0	1	
R875	ERJ6GEYG103	M.RESISTOR CH 1/10W 10K	1	
R901-03	ERJ6GEYG101	M.RESISTOR CH 1/10W 100	3	
R948,49	ERJ6GEYG103	M.RESISTOR CH 1/10W 10K	2	
R950	ERJ6GEYG222	M.RESISTOR CH 1/10W 2.2K	1	
R951	ERJ6GEYG101	M.RESISTOR CH 1/10W 100	1	
R952	ERJ6GEYG222	M.RESISTOR CH 1/10W 2.2K	1	
R953	ERJ6GEYG102	M.RESISTOR CH 1/10W 1K	1	
R954	ERJ6GEYG152	M.RESISTOR CH 1/10W 1.5K	1	
R955	ERJ6GEYG470	M.RESISTOR CH 1/10W 47	1	

Ref.No.	Part No.	Part Name & Description	Pcs	Remarks
R956	ERJ6GEYG152	M.RESISTOR CH 1/10W 1.5K	1	
R957	ERJ6GEYF561	M.RESISTOR CH 1/10W 560	1	
R958	ERJ6GEYG470	M.RESISTOR CH 1/10W 47	1	
R959	ERJ6RBD102	M.RESISTOR CH 1/10W 1K	1	
R960	ERJ6GEYF472	M.RESISTOR CH 1/10W 4.7K	1	
R961	ERJ6GEYG101	M.RESISTOR CH 1/10W 100	1	
R962,63	ERJ6GEYG103	M.RESISTOR CH 1/10W 10K	2	
R965	ERJ6GEYJ274	M.RESISTOR CH 1/10W 270K	1	
R966	ERJ6GEY0R00	M.RESISTOR CH 1/10W 0	1	
R967	ERJ6GEYG102	M.RESISTOR CH 1/10W 1K	1	
R968	ERJ6GEY0R00	M.RESISTOR CH 1/10W 0	1	
R969	ERJ6GEYF333	M.RESISTOR CH 1/10W 33K	1	
R970	ERJ6GEYG103	M.RESISTOR CH 1/10W 10K	1	
R973,74	ERJ6GEYG103	M.RESISTOR CH 1/10W 10K	2	
R975,76	ERJ6GEYG332	M.RESISTOR CH 1/10W 3.3K	2	
R977,78	ERJ6GEY0R00	M.RESISTOR CH 1/10W 0	2	
R979	ERJ6GEYG272	M.RESISTOR CH 1/10W 2.7K	1	
R980	ERJ6GEYG101	M.RESISTOR CH 1/10W 100	1	
R981	ERJ6GEYG103	M.RESISTOR CH 1/10W 10K	1	
R982	ERJ6GEYG101	M.RESISTOR CH 1/10W 100	1	
R983	ERJ6GEYG394	M.RESISTOR CH 1/10W 390K	1	
R984	ERJ6GEYG103	M.RESISTOR CH 1/10W 10K	1	
R985	ERJ6GEYF472	M.RESISTOR CH 1/10W 4.7K	1	
R986,87	ERJ6GEYG103	M.RESISTOR CH 1/10W 10K	2	
R988	ERJ6GEYG563	M.RESISTOR CH 1/10W 56K	1	
R989	ERJ6GEYF561	M.RESISTOR CH 1/10W 560	1	
R990	ERJ6GEYG102	M.RESISTOR CH 1/10W 1K	1	
R991	ERJ6GEY0R00	M.RESISTOR CH 1/10W 0	1	
R992	ERJ6GEYG101	M.RESISTOR CH 1/10W 100	1	
TG1-G6	VJR0646	TEST POINT	6	D0X0R0000022
TP351	VJR0646	TEST POINT	1	D0X0R0000022
TP501	VJR0646	TEST POINT	1	D0X0R0000022
TP502	EYF6CU	TEST POINT	1	
TP503,04	VJR0646	TEST POINT	2	D0X0R0000022
TP601-03	VJR0646	TEST POINT	3	D0X0R0000022
TP701	VJR0646	TEST POINT	1	D0X0R0000022
TP751	VJR0646	TEST POINT	1	D0X0R0000022
TP801	VJR0646	TEST POINT	1	D0X0R0000022
TP951	EYF6CU	TEST POINT	1	
TP952	VJR0646	TEST POINT	1	D0X0R0000022
VL601	VLQ0415	COIL	1	G2A8R0C00003
VR301	VRV0112B502	V.RESISTOR 5K	1	
VR351	VRV0112B502	V.RESISTOR 5K	1	
VR451	VRV0112B101	V.RESISTOR 100K	1	
VR455	VRV0112B501	V.RESISTOR 500	1	
VR501	VRV0112B502	V.RESISTOR 5K	1	
VR502	VRV0064B102	V.RESISTOR 1K	1	D3CB71020002
VR505	VRV0064B102	V.RESISTOR 1K	1	D3CB71020002
VR507	VRV0064B102	V.RESISTOR 1K	1	D3CB71020002
VR510,11	VRV0064B102	V.RESISTOR 1K	2	D3CB71020002
VR512	VRV0112B502	V.RESISTOR 5K	1	
VR601	VRV0112B202	V.RESISTOR 2K	1	
VR602	VRV0112B502	V.RESISTOR 5K	1	
VR701	VRV0064B102	V.RESISTOR 1K	1	D3CB71020002
VR702	VRV0112B502	V.RESISTOR 5K	1	
VR703,04	VRV0112B103	V.RESISTOR 10K	2	
VR751	VRV0064B102	V.RESISTOR 1K	1	D3CB71020002
VR752	VRV0112B502	V.RESISTOR 5K	1	
VR753	VRV0064B102	V.RESISTOR 1K	1	D3CB71020002
VR754	VRV0112B502	V.RESISTOR 5K	1	
VR801	VRV0064B102	V.RESISTOR 1K	1	D3CB71020002
VR802	VRV0112B502	V.RESISTOR 5K	1	
VR803	VRV0064B102	V.RESISTOR 1K	1	D3CB71020002
VR804	VRV0112B502	V.RESISTOR 5K	1	
X402	VSX0330	CRYSTAL OSCILLATOR	1	
X501	VSX0338	CRYSTAL OSCILLATOR	1	H1C1435A0002
		MISCELLANEOUS		
	VML2143	CARD PULLER	1	

Ref.No.	Part No.	Part Name & Description	Pcs	Remarks
	VML2144	CARD PULLER	1	
■ E8	VEP85184C	H1 EQ1 P.C.BOARD	1	(RTL)
C5001,02	ECUX1E104ZFV	C.CAPACITOR CH 25V 0.1U	2	
C5003-06	ECUX1C104KBV	C.CAPACITOR CH 16V 0.1U	4	
C5007-09	ECUX1E104ZFV	C.CAPACITOR CH 25V 0.1U	3	
C5010	ECUX1H121JCV	C.CAPACITOR CH 50V 120P	1	
C5011,12	ECUX1E104ZFV	C.CAPACITOR CH 25V 0.1U	2	
C5013	ECUX1H121JCV	C.CAPACITOR CH 50V 120P	1	
C5014-20	ECUX1E104ZFV	C.CAPACITOR CH 25V 0.1U	7	
C5101-03	EEVHB1C470	E.CAPACITOR 16V 47U	3	
C5104-06	ECUX1C104KBV	C.CAPACITOR CH 16V 0.1U	3	
C5107-09	EEVHB1C100	E.CAPACITOR 16V 10U	3	
C5110,11	ECUX1C104KBV	C.CAPACITOR CH 16V 0.1U	2	
C5112-14	EEVHB1C470	E.CAPACITOR 16V 47U	3	
C5115-17	ECUX1C104KBV	C.CAPACITOR CH 16V 0.1U	3	
C5118	EEVHB1C100	E.CAPACITOR 16V 10U	1	
C5119,20	EEVHB1C470	E.CAPACITOR 16V 47U	2	
C5121,22	ECUX1C104KBV	C.CAPACITOR CH 16V 0.1U	2	
C5123,24	EEVHB0J101	E.CAPACITOR 6.3V 100U	2	
C5125,26	EEVHB0J470	E.CAPACITOR 6.3V 47U	2	
C5301,02	EEVHB1H2R2	E.CAPACITOR 50V 2.2U	2	
C5303-06	ECUX1E104ZFV	C.CAPACITOR CH 25V 0.1U	4	
C5307-09	ECUX1C104KBV	C.CAPACITOR CH 16V 0.1U	3	
C5310	ECUX1H390JCV	C.CAPACITOR CH 50V 39P	1	
C5311	ECUX1H120JCV	C.CAPACITOR CH 50V 12P	1	
C5312-15	ECUX1E104ZFV	C.CAPACITOR CH 25V 0.1U	4	
C5316	ECUX1H101JCV	C.CAPACITOR CH 50V 100P	1	
C5317,18	ECUX1E104ZFV	C.CAPACITOR CH 25V 0.1U	2	
C5319,20	ECUX1C104KBV	C.CAPACITOR CH 16V 0.1U	2	
C5321	ECUX1H100DCV	C.CAPACITOR CH 50V 10P	1	
C5322,23	ECUX1E104ZFV	C.CAPACITOR CH 25V 0.1U	2	
C5324,25	ECUX1C104KBV	C.CAPACITOR CH 16V 0.1U	2	
C5326,27	ECUX1E104ZFV	C.CAPACITOR CH 25V 0.1U	2	
C5328	ECUX1H680JCV	C.CAPACITOR CH 50V 68P	1	
C5332	ECUX1C104KBV	C.CAPACITOR CH 16V 0.1U	1	
C5333	ECUX1H103KBV	C.CAPACITOR CH 50V 0.01U	1	
C5334	ECUX1C473KBV	C.CAPACITOR CH 16V 0.047U	1	
C5336	ECUX1C683KBV	C.CAPACITOR CH 16V 0.068U	1	
C5337	ECUX1C104KBV	C.CAPACITOR CH 16V 0.1U	1	
C5338	ECUX1H820JCV	C.CAPACITOR CH 50V 82P	1	
C5339	ECUV1H470JCV	C.CAPACITOR CH 50V 47P	1	
C5340	ECUX1H180JCV	C.CAPACITOR CH 50V 18P	1	
C5341	ECUX1H391JCV	C.CAPACITOR CH 50V 390P	1	
C5342	ECUX1H820JCV	C.CAPACITOR CH 50V 82P	1	
C5343	ECUV1H470JCV	C.CAPACITOR CH 50V 47P	1	
C5344	ECUX1C104KBV	C.CAPACITOR CH 16V 0.1U	1	
C5346,47	ECUX1E104ZFV	C.CAPACITOR CH 25V 0.1U	2	
C5348,49	ECUX1C104KBV	C.CAPACITOR CH 16V 0.1U	2	
C5350-53	ECUX1E104ZFV	C.CAPACITOR CH 25V 0.1U	4	
C5354	ECUX1C104KBV	C.CAPACITOR CH 16V 0.1U	1	
C5355	ECUX1H122KBV	C.CAPACITOR CH 50V 1200P	1	
C5356	ECUX1H332KBV	C.CAPACITOR CH 50V 3300P	1	
C5357	ECUX1C104KBV	C.CAPACITOR CH 16V 0.1U	1	
C5359,60	ECUX1E104ZFV	C.CAPACITOR CH 25V 0.1U	2	
C5361,62	ECUX1H222KBV	C.CAPACITOR CH 50V 2200P	2	
C5363-65	ECUX1C104KBV	C.CAPACITOR CH 16V 0.1U	3	
C5366,67	ECUX1E104ZFV	C.CAPACITOR CH 25V 0.1U	2	
C5368,69	ECUX1C104KBV	C.CAPACITOR CH 16V 0.1U	2	
C5370-72	ECUX1E104ZFV	C.CAPACITOR CH 25V 0.1U	3	
C5380-89	ECUX1E104ZFV	C.CAPACITOR CH 25V 0.1U	10	
C5491	ECUX1E104ZFV	C.CAPACITOR CH 25V 0.1U	1	
C5492	ECUM1C224KBN	C.CAPACITOR CH 16V 0.22U	1	
C5493	ECUX1H103KBV	C.CAPACITOR CH 50V 0.01U	1	
C5494-99	ECUX1C104KBV	C.CAPACITOR CH 16V 0.1U	6	
C5500	ECUX1A105KBN	C.CAPACITOR CH 10V 1U	1	
C5501	ECUX1C104KBV	C.CAPACITOR CH 16V 0.1U	1	
C5502	ECUX1A105KBN	C.CAPACITOR CH 10V 1U	1	
C5503,04	ECUX1C104KBV	C.CAPACITOR CH 16V 0.1U	2	

Ref.No.	Part No.	Part Name & Description	Pcs	Remarks
C5506-25	ECUX1E104ZFV	C.CAPACITOR CH 25V 0.1U	20	
C5528,29	ECUX1E104ZFV	C.CAPACITOR CH 25V 0.1U	2	
C5530	ECUX1C104KBV	C.CAPACITOR CH 16V 0.1U	1	
C5531-33	ECUX1E104ZFV	C.CAPACITOR CH 25V 0.1U	3	
C5535-37	ECUX1E104ZFV	C.CAPACITOR CH 25V 0.1U	3	
C5538	ECUX1C333KBV	C.CAPACITOR CH 16V 0.033U	1	
C5540	ECUX1H222KBV	C.CAPACITOR CH 50V 2200P	1	
C5542	ECKF1H152KB	C.CAPACITOR 50V 1500P	1	
C5601,02	EEVHB1H2R2	E.CAPACITOR 50V 2.2U	2	
C5603-06	ECUX1E104ZFV	C.CAPACITOR CH 25V 0.1U	4	
C5607-09	ECUX1C104KBV	C.CAPACITOR CH 16V 0.1U	3	
C5610	ECUX1H390JCV	C.CAPACITOR CH 50V 39P	1	
C5611	ECUX1H120JCV	C.CAPACITOR CH 50V 12P	1	
C5612-15	ECUX1E104ZFV	C.CAPACITOR CH 25V 0.1U	4	
C5616	ECUX1H101JCV	C.CAPACITOR CH 50V 100P	1	
C5617,18	ECUX1E104ZFV	C.CAPACITOR CH 25V 0.1U	2	
C5619,20	ECUX1C104KBV	C.CAPACITOR CH 16V 0.1U	2	
C5621	ECUX1H100DCV	C.CAPACITOR CH 50V 10P	1	
C5622,23	ECUX1E104ZFV	C.CAPACITOR CH 25V 0.1U	2	
C5624,25	ECUX1C104KBV	C.CAPACITOR CH 16V 0.1U	2	
C5626,27	ECUX1E104ZFV	C.CAPACITOR CH 25V 0.1U	2	
C5628	ECUX1H680JCV	C.CAPACITOR CH 50V 68P	1	
C5632	ECUX1C104KBV	C.CAPACITOR CH 16V 0.1U	1	
C5633	ECUX1H103KBV	C.CAPACITOR CH 50V 0.01U	1	
C5634	ECUX1C473KBV	C.CAPACITOR CH 16V 0.047U	1	
C5636	ECUX1C683KBV	C.CAPACITOR CH 16V 0.068U	1	
C5637	ECUX1C104KBV	C.CAPACITOR CH 16V 0.1U	1	
C5638	ECUX1H820JCV	C.CAPACITOR CH 50V 82P	1	
C5639	ECUV1H470JCV	C.CAPACITOR CH 50V 47P	1	
C5640	ECUX1H180JCV	C.CAPACITOR CH 50V 18P	1	
C5641	ECUX1H391JCV	C.CAPACITOR CH 50V 390P	1	
C5642	ECUX1H820JCV	C.CAPACITOR CH 50V 82P	1	
C5643	ECUV1H470JCV	C.CAPACITOR CH 50V 47P	1	
C5644	ECUX1C104KBV	C.CAPACITOR CH 16V 0.1U	1	
C5646,47	ECUX1E104ZFV	C.CAPACITOR CH 25V 0.1U	2	
C5648,49	ECUX1C104KBV	C.CAPACITOR CH 16V 0.1U	2	
C5650-53	ECUX1E104ZFV	C.CAPACITOR CH 25V 0.1U	4	
C5654	ECUX1C104KBV	C.CAPACITOR CH 16V 0.1U	1	
C5655	ECUX1H122KBV	C.CAPACITOR CH 50V 1200P	1	
C5656	ECUX1H332KBV	C.CAPACITOR CH 50V 3300P	1	
C5657	ECUX1C104KBV	C.CAPACITOR CH 16V 0.1U	1	
C5659,60	ECUX1E104ZFV	C.CAPACITOR CH 25V 0.1U	2	
C5661,62	ECUX1H222KBV	C.CAPACITOR CH 50V 2200P	2	
C5663-65	ECUX1C104KBV	C.CAPACITOR CH 16V 0.1U	3	
C5666,67	ECUX1E104ZFV	C.CAPACITOR CH 25V 0.1U	2	
C5668,69	ECUX1C104KBV	C.CAPACITOR CH 16V 0.1U	2	
C5672	ECUX1E104ZFV	C.CAPACITOR CH 25V 0.1U	1	
C5680-89	ECUX1E104ZFV	C.CAPACITOR CH 25V 0.1U	10	
C5791	ECUX1E104ZFV	C.CAPACITOR CH 25V 0.1U	1	
C5792	ECUM1C224KBN	C.CAPACITOR CH 16V 0.22U	1	
C5793	ECUX1H103KBV	C.CAPACITOR CH 50V 0.01U	1	
C5794-99	ECUX1C104KBV	C.CAPACITOR CH 16V 0.1U	6	
C5800	ECUX1A105KBN	C.CAPACITOR CH 10V 1U	1	
C5801	ECUX1C104KBV	C.CAPACITOR CH 16V 0.1U	1	
C5802	ECUX1A105KBN	C.CAPACITOR CH 10V 1U	1	
C5803,04	ECUX1C104KBV	C.CAPACITOR CH 16V 0.1U	2	
C5806-25	ECUX1E104ZFV	C.CAPACITOR CH 25V 0.1U	20	
C5828,29	ECUX1E104ZFV	C.CAPACITOR CH 25V 0.1U	2	
C5830	ECUX1C104KBV	C.CAPACITOR CH 16V 0.1U	1	
C5831-33	ECUX1E104ZFV	C.CAPACITOR CH 25V 0.1U	3	
C5837	ECUX1E104ZFV	C.CAPACITOR CH 25V 0.1U	1	
C5838	ECUX1C333KBV	C.CAPACITOR CH 16V 0.033U	1	
C5840	ECUX1H222KBV	C.CAPACITOR CH 50V 2200P	1	
C5842	ECKF1H152KB	C.CAPACITOR 50V 1500P	1	
D5301	MA142K	DIODE	1	
D5601	MA142K	DIODE	1	
FL5101-06	VLF0931	FILTER	6	F1Y2A1030001
IC5001,02	TVHC244FT	IC	2	
IC5003	NJM084V	IC	1	
IC5004	TC7SH04FU	IC	1	
IC5005,06	TC4S30F	IC	2	C0JBAZ000429
IC5007	MC10H125M	IC	1	

Ref.No.	Part No.	Part Name & Description	Pcs	Remarks
IC5008	TC4S30F	IC	1	C0JBAZ000429
IC5101	AN7805F	IC	1	
IC5102	AN7905F	IC	1	
IC5103,04	LT1086CM	IC	2	C0CBAYG00001
IC5301	MC1495D	IC	1	
IC5302-04	UPC1663G	IC	3	C1CB00000329
IC5305	NJM084V	IC	1	
IC5306	NJM319V	IC	1	
IC5307	TC7SH04FU	IC	1	
IC5310	MN673796	IC	1	
IC5311	NJM084V	IC	1	
IC5312	TLCX244FT	IC	1	
IC5313,14	TLCX574FT	IC	2	
IC5315	MC10H124M	IC	1	C0JBZZ000020
IC5601	MC1495D	IC	1	
IC5602-04	UPC1663G	IC	3	C1CB00000329
IC5605	NJM084V	IC	1	
IC5607	TC7SH04FU	IC	1	
IC5610	MN673796	IC	1	
IC5611	NJM084V	IC	1	
IC5612	TLCX244FT	IC	1	
IC5613,14	TLCX574FT	IC	2	
L5101-04	ELESN4R7JA	COIL 4.7UH	4	
L5301	VLQ0163MR27	COIL 0.27UH	1	
L5302	VLQ0163JR47	COIL 0.47UH	1	G1CR47J00004
L5303,04	VLQ0163J101	COIL 100UH	2	
L5305,06	VLQ0163JR22	COIL 0.22UH	2	G1CR22J00002
L5307	VLQ0163J6R8	COIL 6.8UH	1	G1C6R8J00007
L5601	VLQ0163MR27	COIL 0.27UH	1	
L5602	VLQ0163JR47	COIL 0.47UH	1	G1CR47J00004
L5603,04	VLQ0163J101	COIL 100UH	2	
L5605,06	VLQ0163JR22	COIL 0.22UH	2	G1CR22J00002
L5607	VLQ0163J6R8	COIL 6.8UH	1	G1C6R8J00007
P5101	VJP3454B096	CONNECTOR (MALE)	1	K1KA96B00021
P5102	VJP1230T	CONNECTOR (MALE) 3P	1	
P5103	VJP1230R	CONNECTOR (MALE)	1	K1KA03A00198
Q5001,02	2SA1532	TRANSISTOR	2	
Q5301	XN6537	TRANSISTOR-RESISTOR	1	
Q5302,03	2SC3930	TRANSISTOR	2	
Q5304,05	2SD1979	TRANSISTOR	2	
Q5306	XN5531	TRANSISTOR-RESISTOR	1	
Q5307	2SC3930	TRANSISTOR	1	
Q5308,09	2SD1979	TRANSISTOR	2	
Q5310,11	XN5531	TRANSISTOR-RESISTOR	2	
Q5312,13	2SK508K512	TRANSISTOR	2	
Q5314,15	2SC3930	TRANSISTOR	2	
Q5316,17	2SD1979	TRANSISTOR	2	
Q5318	2SC3930	TRANSISTOR	1	
Q5319	XN6537	TRANSISTOR-RESISTOR	1	
Q5320,21	2SC3930	TRANSISTOR	2	
Q5322	XN5531	TRANSISTOR-RESISTOR	1	
Q5323	2SC3930	TRANSISTOR	1	
Q5324	2SC3130	TRANSISTOR	1	
Q5325	2SC3930	TRANSISTOR	1	
Q5326,27	2SD1979	TRANSISTOR	2	
Q5328-30	2SC3930	TRANSISTOR	3	
Q5331	2SD1819A-R	TRANSISTOR	1	
Q5350,51	2SA1532	TRANSISTOR	2	
Q5352	2SC3930	TRANSISTOR	1	
Q5353	2SC3130	TRANSISTOR	1	
Q5601	XN6537	TRANSISTOR-RESISTOR	1	
Q5602,03	2SC3930	TRANSISTOR	2	
Q5604,05	2SD1979	TRANSISTOR	2	
Q5606	XN5531	TRANSISTOR-RESISTOR	1	
Q5607	2SC3930	TRANSISTOR	1	
Q5608,09	2SD1979	TRANSISTOR	2	
Q5610,11	XN5531	TRANSISTOR-RESISTOR	2	
Q5612,13	2SK508K512	TRANSISTOR	2	
Q5614,15	2SC3930	TRANSISTOR	2	
Q5616,17	2SD1979	TRANSISTOR	2	
Q5618	2SC3930	TRANSISTOR	1	
Q5619	XN6537	TRANSISTOR-RESISTOR	1	

Ref.No.	Part No.	Part Name & Description	Pcs	Remarks
Q5620,21	2SC3930	TRANSISTOR	2	
Q5622	XN5531	TRANSISTOR-RESISTOR	1	
Q5623	2SC3930	TRANSISTOR	1	
Q5624	2SC3130	TRANSISTOR	1	
Q5625	2SC3930	TRANSISTOR	1	
Q5626,27	2SD1979	TRANSISTOR	2	
Q5628-30	2SC3930	TRANSISTOR	3	
Q5631	2SD1819A-R	TRANSISTOR	1	
Q5650,51	2SA1532	TRANSISTOR	2	
Q5652	2SC3930	TRANSISTOR	1	
Q5653	2SC3130	TRANSISTOR	1	
R5001	ERJ3GEYJ103	M.RESISTOR CH 1/16W 10K	1	
R5002	ERJ3GEYJ470	M.RESISTOR CH 1/16W 47	1	
R5003	ERJ3GEYJ101	M.RESISTOR CH 1/16W 100	1	
R5004	ERJ3GEYJ103	M.RESISTOR CH 1/16W 10K	1	
R5005	ERJ3GEYJ470	M.RESISTOR CH 1/16W 47	1	
R5006	ERJ3GEYJ101	M.RESISTOR CH 1/16W 100	1	
R5011	ERJ3GEYJ103	M.RESISTOR CH 1/16W 10K	1	
R5012	ERJ3GEYJ101	M.RESISTOR CH 1/16W 100	1	
R5013	ERJ3GEYJ103	M.RESISTOR CH 1/16W 10K	1	
R5014	ERJ3GEYJ101	M.RESISTOR CH 1/16W 100	1	
R5015	ERJ3GEYJ103	M.RESISTOR CH 1/16W 10K	1	
R5016	ERJ3GEYJ101	M.RESISTOR CH 1/16W 100	1	
R5017	ERJ3GEYJ103	M.RESISTOR CH 1/16W 10K	1	
R5018	ERJ3GEYJ101	M.RESISTOR CH 1/16W 100	1	
R5020	ERJ3GEYJ101	M.RESISTOR CH 1/16W 100	1	
R5022	ERJ3GEYJ101	M.RESISTOR CH 1/16W 100	1	
R5024	ERJ3GEYJ101	M.RESISTOR CH 1/16W 100	1	
R5026	ERJ3GEYJ101	M.RESISTOR CH 1/16W 100	1	
R5027	ERJ3GEYJ103	M.RESISTOR CH 1/16W 10K	1	
R5028	ERJ3GEYJ101	M.RESISTOR CH 1/16W 100	1	
R5029	ERJ3GEYJ103	M.RESISTOR CH 1/16W 10K	1	
R5031	ERJ3GEYJ103	M.RESISTOR CH 1/16W 10K	1	
R5032	ERJ3GEYJ101	M.RESISTOR CH 1/16W 100	1	
R5033,34	ERJ3GEYJ123	M.RESISTOR CH 1/16W 12K	2	
R5035,36	ERJ3GEYJ103	M.RESISTOR CH 1/16W 10K	2	
R5037	ERJ3GEYJ101	M.RESISTOR CH 1/16W 100	1	
R5038,39	ERJ3GEYJ123	M.RESISTOR CH 1/16W 12K	2	
R5040,41	ERJ3GEYJ103	M.RESISTOR CH 1/16W 10K	2	
R5042	ERJ3GEYJ101	M.RESISTOR CH 1/16W 100	1	
R5043	ERJ3GEYJ273	M.RESISTOR CH 1/16W 27K	1	
R5044	ERJ3GEYJ101	M.RESISTOR CH 1/16W 100	1	
R5045	ERJ3GEYJ273	M.RESISTOR CH 1/16W 27K	1	
R5046	ERJ3GEYJ101	M.RESISTOR CH 1/16W 100	1	
R5047	ERJ3GEYJ103	M.RESISTOR CH 1/16W 10K	1	
R5048	ERJ3GEYJ101	M.RESISTOR CH 1/16W 100	1	
R5049	ERJ3GEYG472	M.RESISTOR CH 1/16W 4.7K	1	
R5051	ERJ3GEYJ101	M.RESISTOR CH 1/16W 100	1	
R5052	ERJ3GEYJ273	M.RESISTOR CH 1/16W 27K	1	
R5053	ERJ3GEYJ101	M.RESISTOR CH 1/16W 100	1	
R5054	ERJ3GEYJ273	M.RESISTOR CH 1/16W 27K	1	
R5055	ERJ3GEYJ101	M.RESISTOR CH 1/16W 100	1	
R5056	ERJ3GEYJ103	M.RESISTOR CH 1/16W 10K	1	
R5057	ERJ3GEYJ101	M.RESISTOR CH 1/16W 100	1	
R5058	ERJ3GEYG472	M.RESISTOR CH 1/16W 4.7K	1	
R5060	ERJ3GEYJ101	M.RESISTOR CH 1/16W 100	1	
R5061,62	ERJ3GEY0R00	M.RESISTOR CH 1/16W 0	2	
R5063	ERJ3GEYJ221	M.RESISTOR CH 1/16W 220	1	
R5064	ERJ3GEYJ101	M.RESISTOR CH 1/16W 100	1	
R5065	ERJ3GEYG102	M.RESISTOR CH 1/16W 1K	1	
R5066	ERJ3GEYG471	M.RESISTOR CH 1/16W 470	1	
R5067	ERJ3GEYG102	M.RESISTOR CH 1/16W 1K	1	
R5068	ERJ3GEYG471	M.RESISTOR CH 1/16W 470	1	
R5069	ERJ3GEYG102	M.RESISTOR CH 1/16W 1K	1	
R5070	ERJ3GEYG471	M.RESISTOR CH 1/16W 470	1	
R5071	ERJ3GEYJ103	M.RESISTOR CH 1/16W 10K	1	
R5072,73	ERJ3GEYJ101	M.RESISTOR CH 1/16W 100	2	
R5074	ERJ3GEYJ103	M.RESISTOR CH 1/16W 10K	1	
R5075	ERJ3GEY0R00	M.RESISTOR CH 1/16W 0	1	
R5101-05	ERJ3GEY0R00	M.RESISTOR CH 1/16W 0	5	
R5106	ERJ3GEYJ103	M.RESISTOR CH 1/16W 10K	1	
R5107-13	ERJ3GEY0R00	M.RESISTOR CH 1/16W 0	7	
R5114	ERJ3RBD121	M.RESISTOR CH 1/16W 120	1	
R5115	ERJ3RBD151	M.RESISTOR CH 1/16W 150	1	

Ref.No.	Part No.	Part Name & Description	Pcs	Remarks
R5116	ERJ3RBD121	M.RESISTOR CH 1/16W 120	1	
R5117	ERJ3RBD151	M.RESISTOR CH 1/16W 150	1	
R5118	ERJ3GEY0R00	M.RESISTOR CH 1/16W 0	1	
R5120	ERJ3GEY0R00	M.RESISTOR CH 1/16W 0	1	
R5122	ERJ3GEY0R00	M.RESISTOR CH 1/16W 0	1	
R5124	ERJ3GEY0R00	M.RESISTOR CH 1/16W 0	1	
R5127-29	ERJ3GEY0R00	M.RESISTOR CH 1/16W 0	3	
R5131-34	ERJ3GEY0R00	M.RESISTOR CH 1/16W 0	4	
R5135-38	ERJ3GEYJ101	M.RESISTOR CH 1/16W 100	4	
R5301-04	ERJ3GEYJ470	M.RESISTOR CH 1/16W 47	4	
R5305	ERJ3RBD271	M.RESISTOR CH 1/16W 270	1	
R5306	ERJ3RBD181	M.RESISTOR CH 1/16W 180	1	
R5307,08	ERJ3GEYJ103	M.RESISTOR CH 1/16W 10K	2	
R5309,10	ERJ3GEYJ330	M.RESISTOR CH 1/16W 33	2	
R5311	ERJ3RBD682	M.RESISTOR CH 1/16W 6.8K	1	
R5312	ERJ3RBD822	M.RESISTOR CH 1/16W 8.2K	1	
R5313,14	ERJ3RBD561	M.RESISTOR CH 1/16W 560	2	
R5315	ERJ3RBD151	M.RESISTOR CH 1/16W 150	1	
R5316,17	ERJ3RBD561	M.RESISTOR CH 1/16W 560	2	
R5318,19	ERJ3GEYJ470	M.RESISTOR CH 1/16W 47	2	
R5320,21	ERJ3GEYJ330	M.RESISTOR CH 1/16W 33	2	
R5322	ERJ3GEYJ470	M.RESISTOR CH 1/16W 47	1	
R5323	ERJ3GEYJ122	M.RESISTOR CH 1/16W 1.2K	1	
R5324	ERJ3GEYG472	M.RESISTOR CH 1/16W 4.7K	1	
R5325	ERJ3GEYJ470	M.RESISTOR CH 1/16W 47	1	
R5326,27	ERJ3GEYJ272	M.RESISTOR CH 1/16W 2.7K	2	
R5328,29	ERJ3GEYJ470	M.RESISTOR CH 1/16W 47	2	
R5330,31	ERJ3GEYG152	M.RESISTOR CH 1/16W 1.5K	2	
R5332,33	ERJ3GEYJ103	M.RESISTOR CH 1/16W 10K	2	
R5334	ERJ3GEYJ101	M.RESISTOR CH 1/16W 100	1	
R5335,36	ERJ3GEYJ470	M.RESISTOR CH 1/16W 47	2	
R5337,38	ERJ3GEYJ330	M.RESISTOR CH 1/16W 33	2	
R5339,40	ERJ3GEYG472	M.RESISTOR CH 1/16W 4.7K	2	
R5341,42	ERJ3GEYJ470	M.RESISTOR CH 1/16W 47	2	
R5343	ERJ3GEYG332	M.RESISTOR CH 1/16W 3.3K	1	
R5344	ERJ3RBD151	M.RESISTOR CH 1/16W 150	1	
R5345	ERJ3GEYJ470	M.RESISTOR CH 1/16W 47	1	
R5346	ERJ3RBD272	M.RESISTOR CH 1/16W 2.7K	1	
R5347	ERJ3GEYG332	M.RESISTOR CH 1/16W 3.3K	1	
R5348	ERJ3GEY0R00	M.RESISTOR CH 1/16W 0	1	
R5349	ERJ3GEYJ181	M.RESISTOR CH 1/16W 180	1	
R5350	ERJ3RED680	M.RESISTOR CH 1/16W 68	1	
R5351,52	ERJ3RBD151	M.RESISTOR CH 1/16W 150	2	
R5353,54	ERJ3GEYG102	M.RESISTOR CH 1/16W 1K	2	
R5355,56	ERJ3GEYJ470	M.RESISTOR CH 1/16W 47	2	
R5358,59	ERJ3GEYG152	M.RESISTOR CH 1/16W 1.5K	2	
R5360,61	ERJ3GEYG102	M.RESISTOR CH 1/16W 1K	2	
R5362,63	ERJ3GEYJ470	M.RESISTOR CH 1/16W 47	2	
R5364,65	ERJ3GEYJ330	M.RESISTOR CH 1/16W 33	2	
R5366,67	ERJ3GEYJ681	M.RESISTOR CH 1/16W 680	2	
R5368	ERJ3RBD121	M.RESISTOR CH 1/16W 120	1	
R5369	ERJ3RBD333	M.RESISTOR CH 1/16W 33K	1	
R5370	ERJ3RBD271	M.RESISTOR CH 1/16W 270	1	
R5371	ERJ3RBD121	M.RESISTOR CH 1/16W 120	1	
R5372	ERJ3RBD333	M.RESISTOR CH 1/16W 33K	1	
R5373,74	ERJ3GEYG152	M.RESISTOR CH 1/16W 1.5K	2	
R5375	ERJ3GEYJ470	M.RESISTOR CH 1/16W 47	1	
R5376	ERJ3GEYJ821	M.RESISTOR CH 1/16W 820	1	
R5377-79	ERJ3GEYJ470	M.RESISTOR CH 1/16W 47	3	
R5380	ERJ3GEYJ182	M.RESISTOR CH 1/16W 1.8K	1	
R5381	ERJ3GEYJ470	M.RESISTOR CH 1/16W 47	1	
R5382,83	ERJ3GEYJ103	M.RESISTOR CH 1/16W 10K	2	
R5384,85	ERJ3GEYJ470	M.RESISTOR CH 1/16W 47	2	
R5386	ERJ3GEYG472	M.RESISTOR CH 1/16W 4.7K	1	
R5387,88	ERJ3GEYG102	M.RESISTOR CH 1/16W 1K	2	
R5389,90	ERJ3GEYJ470	M.RESISTOR CH 1/16W 47	2	
R5392,93	ERJ3GEYG152	M.RESISTOR CH 1/16W 1.5K	2	
R5394,95	ERJ3GEYG102	M.RESISTOR CH 1/16W 1K	2	
R5396,97	ERJ3GEYJ470	M.RESISTOR CH 1/16W 47	2	
R5398	ERJ3RBD271	M.RESISTOR CH 1/16W 270	1	
R5399,00	ERJ3GEYJ330	M.RESISTOR CH 1/16W 33	2	
R5401	ERJ3RBD682	M.RESISTOR CH 1/16W 6.8K	1	
R5402	ERJ3RBD822	M.RESISTOR CH 1/16W 8.2K	1	
R5403,04	ERJ3RBD561	M.RESISTOR CH 1/16W 560	2	
R5405	ERJ3RBD151	M.RESISTOR CH 1/16W 150	1	

Ref.No.	Part No.	Part Name & Description	Pcs	Remarks
R5406,07	ERJ3RBD561	M.RESISTOR CH 1/16W 560	2	
R5408,09	ERJ3GEYJ470	M.RESISTOR CH 1/16W 47	2	
R5410,11	ERJ3GEYJ330	M.RESISTOR CH 1/16W 33	2	
R5412,13	ERJ3GEYG472	M.RESISTOR CH 1/16W 4.7K	2	
R5414-16	ERJ3GEYJ470	M.RESISTOR CH 1/16W 47	3	
R5417	ERJ6GEYG391	M.RESISTOR CH 1/10W 390	1	
R5418-20	ERJ3GEYJ470	M.RESISTOR CH 1/16W 47	3	
R5421	ERJ3GEYG102	M.RESISTOR CH 1/16W 1K	1	
R5422	ERJ3GEYJ101	M.RESISTOR CH 1/16W 100	1	
R5423	ERJ3GEYJ470	M.RESISTOR CH 1/16W 47	1	
R5424	ERJ3GEYG472	M.RESISTOR CH 1/16W 4.7K	1	
R5425,26	ERJ3GEYG102	M.RESISTOR CH 1/16W 1K	2	
R5427,28	ERJ3GEYJ470	M.RESISTOR CH 1/16W 47	2	
R5430	ERJ3RBD681	M.RESISTOR CH 1/16W 680	1	
R5432,33	ERJ3GEYJ103	M.RESISTOR CH 1/16W 10K	2	
R5434-36	ERJ3GEYG102	M.RESISTOR CH 1/16W 1K	3	
R5437	ERJ3GEYJ470	M.RESISTOR CH 1/16W 47	1	
R5438	ERJ3GEY0R00	M.RESISTOR CH 1/16W 0	1	
R5439	ERJ3GEYJ392	M.RESISTOR CH 1/16W 3.9K	1	
R5440	ERJ3GEY0R00	M.RESISTOR CH 1/16W 0	1	
R5441	ERJ3GEYJ470	M.RESISTOR CH 1/16W 47	1	
R5442	ERJ6GEYF561	M.RESISTOR CH 1/10W 560	1	
R5443	ERJ3GEYG472	M.RESISTOR CH 1/16W 4.7K	1	
R5444	ERJ3GEYJ470	M.RESISTOR CH 1/16W 47	1	
R5445	ERJ6GEYG122	M.RESISTOR CH 1/10W 1.2K	1	
R5446	ERJ3GEYJ750	M.RESISTOR CH 1/16W 75	1	
R5447	ERJ3GEYJ101	M.RESISTOR CH 1/16W 100	1	
R5448	ERJ3GEYJ153	M.RESISTOR CH 1/16W 15K	1	
R5449	ERJ3GEYJ392	M.RESISTOR CH 1/16W 3.9K	1	
R5450	ERJ3GEYJ333	M.RESISTOR CH 1/16W 33K	1	
R5451	ERJ3GEYG682	M.RESISTOR CH 1/16W 6.8K	1	
R5452	ERJ3GEYG472	M.RESISTOR CH 1/16W 4.7K	1	
R5453	ERJ3GEYJ473	M.RESISTOR CH 1/16W 47K	1	
R5454	ERJ3GEYG472	M.RESISTOR CH 1/16W 4.7K	1	
R5455	ERJ3GEYJ101	M.RESISTOR CH 1/16W 100	1	
R5487	ERJ3GEYJ101	M.RESISTOR CH 1/16W 100	1	
R5491	ERJ3GEYJ103	M.RESISTOR CH 1/16W 10K	1	
R5492	ERJ3GEY0R00	M.RESISTOR CH 1/16W 0	1	
R5495	ERJ3GEYJ681	M.RESISTOR CH 1/16W 680	1	
R5496	ERJ3GEYG102	M.RESISTOR CH 1/16W 1K	1	
R5497,98	ERJ3RBD102	M.RESISTOR CH 1/16W 1K	2	
R5499	ERJ3GEYJ681	M.RESISTOR CH 1/16W 680	1	
R5500	ERJ3GEYJ331	M.RESISTOR CH 1/16W 330	1	
R5501	ERJ3GEYG472	M.RESISTOR CH 1/16W 4.7K	1	
R5502	ERJ3GEYJ681	M.RESISTOR CH 1/16W 680	1	
R5503	ERJ3GEY0R00	M.RESISTOR CH 1/16W 0	1	
R5507	ERJ3GEYJ470	M.RESISTOR CH 1/16W 47	1	
R5508	ERJ3RED680	M.RESISTOR CH 1/16W 68	1	
R5509	ERJ3GEYJ470	M.RESISTOR CH 1/16W 47	1	
R5510	ERJ3GEYJ391	M.RESISTOR CH 1/16W 390	1	
R5511	ERJ3GEYG152	M.RESISTOR CH 1/16W 1.5K	1	
R5512	ERJ3RBD821	M.RESISTOR CH 1/16W 820	1	
R5513	ERJ3RBD471	M.RESISTOR CH 1/16W 470	1	
R5514	ERJ3GEY0R00	M.RESISTOR CH 1/16W 0	1	
R5515	ERJ3GEYJ222	M.RESISTOR CH 1/16W 2.2K	1	
R5516	ERJ3GEYG152	M.RESISTOR CH 1/16W 1.5K	1	
R5517	ERJ3GEY0R00	M.RESISTOR CH 1/16W 0	1	
R5521	ERJ3GEYJ101	M.RESISTOR CH 1/16W 100	1	
R5526	ERJ3GEYJ101	M.RESISTOR CH 1/16W 100	1	
R5527	ERJ3GEYJ103	M.RESISTOR CH 1/16W 10K	1	
R5528	ERJ3GEY0R00	M.RESISTOR CH 1/16W 0	1	
R5529	ERJ3GEYJ101	M.RESISTOR CH 1/16W 100	1	
R5530	ERJ3RBD561	M.RESISTOR CH 1/16W 560	1	
R5531	ERJ3RBD122	M.RESISTOR CH 1/16W 1.2K	1	
R5532	ERJ3RBD242	M.RESISTOR CH 1/16W 2.4K	1	
R5533	ERJ3RBD472	M.RESISTOR CH 1/16W 4.7K	1	
R5534	ERJ3RBD103	M.RESISTOR CH 1/16W 10K	1	
R5535	ERJ3RBD203	M.RESISTOR CH 1/16W 20K	1	
R5536	ERJ3RBD393	M.RESISTOR CH 1/16W 39K	1	
R5537	ERJ3RBD753	M.RESISTOR CH 1/16W 75K	1	
R5538	ERJ3GEYJ470	M.RESISTOR CH 1/16W 47	1	
R5539	ERJ3GEYJ392	M.RESISTOR CH 1/16W 3.9K	1	
R5540	ERJ3GEY0R00	M.RESISTOR CH 1/16W 0	1	
R5541	ERJ3GEYJ101	M.RESISTOR CH 1/16W 100	1	
R5542	ERJ3RBD561	M.RESISTOR CH 1/16W 560	1	

Ref.No.	Part No.	Part Name & Description	Pcs	Remarks
R5543	ERJ3RBD122	M.RESISTOR CH 1/16W 1.2K	1	
R5544	ERJ3RBD242	M.RESISTOR CH 1/16W 2.4K	1	
R5545	ERJ3RBD472	M.RESISTOR CH 1/16W 4.7K	1	
R5546	ERJ3RBD103	M.RESISTOR CH 1/16W 10K	1	
R5547	ERJ3RBD203	M.RESISTOR CH 1/16W 20K	1	
R5548	ERJ3RBD393	M.RESISTOR CH 1/16W 39K	1	
R5549	ERJ3RBD753	M.RESISTOR CH 1/16W 75K	1	
R5550	ERJ3GEYJ271	M.RESISTOR CH 1/16W 270	1	
R5551	ERJ3GEYJ470	M.RESISTOR CH 1/16W 47	1	
R5552	ERJ6GEYG332	M.RESISTOR CH 1/10W 3.3K	1	
R5553-55	ERJ3GEYJ470	M.RESISTOR CH 1/16W 47	3	
R5556,57	ERJ3GEYJ101	M.RESISTOR CH 1/16W 100	2	
R5558-61	ERJ6GEYG471	M.RESISTOR CH 1/10W 470	4	
R5562-65	ERJ3GEYJ470	M.RESISTOR CH 1/16W 47	4	
R5566	ERJ3GEYJ330	M.RESISTOR CH 1/16W 33	1	
R5567	ERJ3GEYG472	M.RESISTOR CH 1/16W 4.7K	1	
R5568	ERJ3GEY0R00	M.RESISTOR CH 1/16W 0	1	
R5601-04	ERJ3GEYJ470	M.RESISTOR CH 1/16W 47	4	
R5605	ERJ3RBD271	M.RESISTOR CH 1/16W 270	1	
R5606	ERJ3RBD181	M.RESISTOR CH 1/16W 180	1	
R5607,08	ERJ3GEYJ103	M.RESISTOR CH 1/16W 10K	2	
R5609,10	ERJ3GEYJ330	M.RESISTOR CH 1/16W 33	2	
R5611	ERJ3RBD682	M.RESISTOR CH 1/16W 6.8K	1	
R5612	ERJ3RBD822	M.RESISTOR CH 1/16W 8.2K	1	
R5613,14	ERJ3RBD561	M.RESISTOR CH 1/16W 560	2	
R5615	ERJ3RBD151	M.RESISTOR CH 1/16W 150	1	
R5616,17	ERJ3RBD561	M.RESISTOR CH 1/16W 560	2	
R5618,19	ERJ3GEYJ470	M.RESISTOR CH 1/16W 47	2	
R5620,21	ERJ3GEYJ330	M.RESISTOR CH 1/16W 33	2	
R5622	ERJ3GEYJ470	M.RESISTOR CH 1/16W 47	1	
R5623	ERJ3GEYJ122	M.RESISTOR CH 1/16W 1.2K	1	
R5624	ERJ3GEYG472	M.RESISTOR CH 1/16W 4.7K	1	
R5625	ERJ3GEYJ470	M.RESISTOR CH 1/16W 47	1	
R5626,27	ERJ3GEYJ272	M.RESISTOR CH 1/16W 2.7K	2	
R5628,29	ERJ3GEYJ470	M.RESISTOR CH 1/16W 47	2	
R5630,31	ERJ3GEYG152	M.RESISTOR CH 1/16W 1.5K	2	
R5632,33	ERJ3GEYJ103	M.RESISTOR CH 1/16W 10K	2	
R5634	ERJ3GEYJ101	M.RESISTOR CH 1/16W 100	1	
R5635,36	ERJ3GEYJ470	M.RESISTOR CH 1/16W 47	2	
R5637,38	ERJ3GEYJ330	M.RESISTOR CH 1/16W 33	2	
R5639,40	ERJ3GEYG472	M.RESISTOR CH 1/16W 4.7K	2	
R5641,42	ERJ3GEYJ470	M.RESISTOR CH 1/16W 47	2	
R5643	ERJ3GEYG332	M.RESISTOR CH 1/16W 3.3K	1	
R5644	ERJ3RBD151	M.RESISTOR CH 1/16W 150	1	
R5645	ERJ3GEYJ470	M.RESISTOR CH 1/16W 47	1	
R5646	ERJ3RBD272	M.RESISTOR CH 1/16W 2.7K	1	
R5647	ERJ3GEYG332	M.RESISTOR CH 1/16W 3.3K	1	
R5648	ERJ3GEY0R00	M.RESISTOR CH 1/16W 0	1	
R5649	ERJ3GEYJ181	M.RESISTOR CH 1/16W 180	1	
R5650	ERJ3RED680	M.RESISTOR CH 1/16W 68	1	
R5651,52	ERJ3RBD151	M.RESISTOR CH 1/16W 150	2	
R5653,54	ERJ3GEYG102	M.RESISTOR CH 1/16W 1K	2	
R5655,56	ERJ3GEYJ470	M.RESISTOR CH 1/16W 47	2	
R5658,59	ERJ3GEYG152	M.RESISTOR CH 1/16W 1.5K	2	
R5660,61	ERJ3GEYG102	M.RESISTOR CH 1/16W 1K	2	
R5662,63	ERJ3GEYJ470	M.RESISTOR CH 1/16W 47	2	
R5664,65	ERJ3GEYJ330	M.RESISTOR CH 1/16W 33	2	
R5666,67	ERJ3GEYJ681	M.RESISTOR CH 1/16W 680	2	
R5668	ERJ3RBD121	M.RESISTOR CH 1/16W 120	1	
R5669	ERJ3RBD333	M.RESISTOR CH 1/16W 33K	1	
R5670	ERJ3RBD271	M.RESISTOR CH 1/16W 270	1	
R5671	ERJ3RBD121	M.RESISTOR CH 1/16W 120	1	
R5672	ERJ3RBD333	M.RESISTOR CH 1/16W 33K	1	
R5673,74	ERJ3GEYG152	M.RESISTOR CH 1/16W 1.5K	2	
R5675	ERJ3GEYJ470	M.RESISTOR CH 1/16W 47	1	
R5676	ERJ3GEYJ821	M.RESISTOR CH 1/16W 820	1	
R5677-79	ERJ3GEYJ470	M.RESISTOR CH 1/16W 47	3	
R5680	ERJ3GEYJ182	M.RESISTOR CH 1/16W 1.8K	1	
R5681	ERJ3GEYJ470	M.RESISTOR CH 1/16W 47	1	
R5682,83	ERJ3GEYJ103	M.RESISTOR CH 1/16W 10K	2	
R5684,85	ERJ3GEYJ470	M.RESISTOR CH 1/16W 47	2	
R5686	ERJ3GEYG472	M.RESISTOR CH 1/16W 4.7K	1	
R5687,88	ERJ3GEYG102	M.RESISTOR CH 1/16W 1K	2	
R5689,90	ERJ3GEYJ470	M.RESISTOR CH 1/16W 47	2	
R5692,93	ERJ3GEYG152	M.RESISTOR CH 1/16W 1.5K	2	

Ref.No.	Part No.	Part Name & Description	Pcs	Remarks
R5694,95	ERJ3GEYG102	M.RESISTOR CH 1/16W 1K	2	
R5696,97	ERJ3GEYJ470	M.RESISTOR CH 1/16W 47	2	
R5698	ERJ3RBD271	M.RESISTOR CH 1/16W 270	1	
R5699,00	ERJ3GEYJ330	M.RESISTOR CH 1/16W 33	2	
R5701	ERJ3RBD682	M.RESISTOR CH 1/16W 6.8K	1	
R5702	ERJ3RBD822	M.RESISTOR CH 1/16W 8.2K	1	
R5703,04	ERJ3RBD561	M.RESISTOR CH 1/16W 560	2	
R5705	ERJ3RBD151	M.RESISTOR CH 1/16W 150	1	
R5706,07	ERJ3RBD561	M.RESISTOR CH 1/16W 560	2	
R5708,09	ERJ3GEYJ470	M.RESISTOR CH 1/16W 47	2	
R5710,11	ERJ3GEYJ330	M.RESISTOR CH 1/16W 33	2	
R5712,13	ERJ3GEYG472	M.RESISTOR CH 1/16W 4.7K	2	
R5714-16	ERJ3GEYJ470	M.RESISTOR CH 1/16W 47	3	
R5717	ERJ6GEYG391	M.RESISTOR CH 1/10W 390	1	
R5718-20	ERJ3GEYJ470	M.RESISTOR CH 1/16W 47	3	
R5721	ERJ3GEYG102	M.RESISTOR CH 1/16W 1K	1	
R5722	ERJ3GEYJ101	M.RESISTOR CH 1/16W 100	1	
R5723	ERJ3GEYJ470	M.RESISTOR CH 1/16W 47	1	
R5724	ERJ3GEYG472	M.RESISTOR CH 1/16W 4.7K	1	
R5725,26	ERJ3GEYG102	M.RESISTOR CH 1/16W 1K	2	
R5727,28	ERJ3GEYJ470	M.RESISTOR CH 1/16W 47	2	
R5730	ERJ3RBD681	M.RESISTOR CH 1/16W 680	1	
R5732,33	ERJ3GEYJ103	M.RESISTOR CH 1/16W 10K	2	
R5734-36	ERJ3GEYG102	M.RESISTOR CH 1/16W 1K	3	
R5737	ERJ3GEYJ470	M.RESISTOR CH 1/16W 47	1	
R5738	ERJ3GEY0R00	M.RESISTOR CH 1/16W 0	1	
R5739	ERJ3GEYJ392	M.RESISTOR CH 1/16W 3.9K	1	
R5740	ERJ3GEY0R00	M.RESISTOR CH 1/16W 0	1	
R5741	ERJ3GEYJ470	M.RESISTOR CH 1/16W 47	1	
R5742	ERJ6GEYF561	M.RESISTOR CH 1/10W 560	1	
R5743	ERJ3GEYG472	M.RESISTOR CH 1/16W 4.7K	1	
R5744	ERJ3GEYJ470	M.RESISTOR CH 1/16W 47	1	
R5745	ERJ6GEYG122	M.RESISTOR CH 1/10W 1.2K	1	
R5746	ERJ3GEYJ750	M.RESISTOR CH 1/16W 75	1	
R5747	ERJ3GEYJ101	M.RESISTOR CH 1/16W 100	1	
R5748	ERJ3GEYJ153	M.RESISTOR CH 1/16W 15K	1	
R5749	ERJ3GEYJ392	M.RESISTOR CH 1/16W 3.9K	1	
R5750	ERJ3GEYJ333	M.RESISTOR CH 1/16W 33K	1	
R5751	ERJ3GEYG682	M.RESISTOR CH 1/16W 6.8K	1	
R5752	ERJ3GEYG472	M.RESISTOR CH 1/16W 4.7K	1	
R5753	ERJ3GEYJ473	M.RESISTOR CH 1/16W 47K	1	
R5754	ERJ3GEYG472	M.RESISTOR CH 1/16W 4.7K	1	
R5755	ERJ3GEYJ101	M.RESISTOR CH 1/16W 100	1	
R5787	ERJ3GEYJ101	M.RESISTOR CH 1/16W 100	1	
R5788	ERJ3GEY0R00	M.RESISTOR CH 1/16W 0	1	
R5791	ERJ3GEYJ103	M.RESISTOR CH 1/16W 10K	1	
R5792	ERJ3GEY0R00	M.RESISTOR CH 1/16W 0	1	
R5795	ERJ3GEYJ681	M.RESISTOR CH 1/16W 680	1	
R5796	ERJ3GEYG102	M.RESISTOR CH 1/16W 1K	1	
R5797,98	ERJ3RBD102	M.RESISTOR CH 1/16W 1K	2	
R5799	ERJ3GEYJ681	M.RESISTOR CH 1/16W 680	1	
R5800	ERJ3GEYJ331	M.RESISTOR CH 1/16W 330	1	
R5801	ERJ3GEYG472	M.RESISTOR CH 1/16W 4.7K	1	
R5802	ERJ3GEYJ681	M.RESISTOR CH 1/16W 680	1	
R5803	ERJ3GEY0R00	M.RESISTOR CH 1/16W 0	1	
R5807	ERJ3GEYJ470	M.RESISTOR CH 1/16W 47	1	
R5808	ERJ3RED680	M.RESISTOR CH 1/16W 68	1	
R5809	ERJ3GEYJ470	M.RESISTOR CH 1/16W 47	1	
R5810	ERJ3GEYJ391	M.RESISTOR CH 1/16W 390	1	
R5811	ERJ3GEYG152	M.RESISTOR CH 1/16W 1.5K	1	
R5812	ERJ3RBD821	M.RESISTOR CH 1/16W 820	1	
R5813	ERJ3RBD471	M.RESISTOR CH 1/16W 470	1	
R5814	ERJ3GEY0R00	M.RESISTOR CH 1/16W 0	1	
R5815	ERJ3GEYJ222	M.RESISTOR CH 1/16W 2.2K	1	
R5816	ERJ3GEYG152	M.RESISTOR CH 1/16W 1.5K	1	
R5817	ERJ3GEY0R00	M.RESISTOR CH 1/16W 0	1	
R5821	ERJ3GEYJ101	M.RESISTOR CH 1/16W 100	1	
R5826	ERJ3GEYJ101	M.RESISTOR CH 1/16W 100	1	
R5827	ERJ3GEYJ103	M.RESISTOR CH 1/16W 10K	1	
R5828	ERJ3GEY0R00	M.RESISTOR CH 1/16W 0	1	
R5829	ERJ3GEYJ101	M.RESISTOR CH 1/16W 100	1	
R5830	ERJ3RBD561	M.RESISTOR CH 1/16W 560	1	
R5831	ERJ3RBD122	M.RESISTOR CH 1/16W 1.2K	1	
R5832	ERJ3RBD242	M.RESISTOR CH 1/16W 2.4K	1	
R5833	ERJ3RBD472	M.RESISTOR CH 1/16W 4.7K	1	

Ref.No.	Part No.	Part Name & Description	Pcs	Remarks
R5834	ERJ3RBD103	M.RESISTOR CH 1/16W 10K	1	
R5835	ERJ3RBD203	M.RESISTOR CH 1/16W 20K	1	
R5836	ERJ3RBD393	M.RESISTOR CH 1/16W 39K	1	
R5837	ERJ3RBD753	M.RESISTOR CH 1/16W 75K	1	
R5838	ERJ3GEYJ470	M.RESISTOR CH 1/16W 47	1	
R5839	ERJ3GEYJ392	M.RESISTOR CH 1/16W 3.9K	1	
R5840	ERJ3GEY0R00	M.RESISTOR CH 1/16W 0	1	
R5841	ERJ3GEYJ101	M.RESISTOR CH 1/16W 100	1	
R5842	ERJ3RBD561	M.RESISTOR CH 1/16W 560	1	
R5843	ERJ3RBD122	M.RESISTOR CH 1/16W 1.2K	1	
R5844	ERJ3RBD242	M.RESISTOR CH 1/16W 2.4K	1	
R5845	ERJ3RBD472	M.RESISTOR CH 1/16W 4.7K	1	
R5846	ERJ3RBD103	M.RESISTOR CH 1/16W 10K	1	
R5847	ERJ3RBD203	M.RESISTOR CH 1/16W 20K	1	
R5848	ERJ3RBD393	M.RESISTOR CH 1/16W 39K	1	
R5849	ERJ3RBD753	M.RESISTOR CH 1/16W 75K	1	
R5850	ERJ3GEYJ271	M.RESISTOR CH 1/16W 270	1	
R5851	ERJ3GEYJ470	M.RESISTOR CH 1/16W 47	1	
R5852	ERJ6GEYG332	M.RESISTOR CH 1/10W 3.3K	1	
R5853-55	ERJ3GEYJ470	M.RESISTOR CH 1/16W 47	3	
R5856,57	ERJ3GEYJ101	M.RESISTOR CH 1/16W 100	2	
R5858-61	ERJ6GEYG471	M.RESISTOR CH 1/10W 470	4	
R5862-65	ERJ3GEYJ470	M.RESISTOR CH 1/16W 47	4	
R5866	ERJ3GEYJ330	M.RESISTOR CH 1/16W 33	1	
R5867	ERJ3GEYG472	M.RESISTOR CH 1/16W 4.7K	1	
R5868	ERJ3GEY0R00	M.RESISTOR CH 1/16W 0	1	
R5894	ERJ3GEY0R00	M.RESISTOR CH 1/16W 0	1	
R5896,97	ERDS2T0	C.RESISTOR 1/4W 0	2	
RY5301	ATQ229	RELAY	1	K6B2CDB00006
RY5601	ATQ229	RELAY	1	K6B2CDB00006
SW5300	VSS0367-06B	SWITCH	1	K0D161A00001
SW5600	VSS0367-06B	SWITCH	1	K0D161A00001
TG5001	VJR0646	TEST POINT	1	D0X0R0000022
TG5004,05	VJR0646	TEST POINT	2	D0X0R0000022
TG5008-10	VJR0646	TEST POINT	3	D0X0R0000022
TG5013	VJR0646	TEST POINT	1	D0X0R0000022
TP5001,02	VJR0646	TEST POINT	2	D0X0R0000022
TP5010	EYF6CU	TEST POINT	1	
TP5011,12	VJR0646	TEST POINT	2	D0X0R0000022
TP5014	EYF6CU	TEST POINT	1	
TP5020,21	EYF6CU	TEST POINT	2	
TP5023	EYF6CU	TEST POINT	1	
TP5024,25	VJR0646	TEST POINT	2	D0X0R0000022
TP5030	EYF6CU	TEST POINT	1	
TP5031,32	VJR0646	TEST POINT	2	D0X0R0000022
TP5034	EYF6CU	TEST POINT	1	
TP5040,41	EYF6CU	TEST POINT	2	
TP5043	EYF6CU	TEST POINT	1	
TP5044,45	VJR0646	TEST POINT	2	D0X0R0000022
		MISCELLANEOUS		
	VML2143	CARD PULLER	1	
	VML2144	CARD PULLER	1	
	VSC3626	HEAT SINK	2	
	XNG26EFXS	NUT	2	
	XYN26+F10	SCREW	2	
	VSC4609	SHIELD CASE	2	
	XYN3+F8	SCREW	2	
	VMP6465	HEAT SINK HOLDER ANGLE B	1	
■ E9	VEP85184D	H2 EQ2 P.C.BOARD	1	(RTL)
C5001,02	ECUX1E104ZFV	C.CAPACITOR CH 25V 0.1U	2	
C5003-06	ECUX1C104KBV	C.CAPACITOR CH 16V 0.1U	4	
C5007-09	ECUX1E104ZFV	C.CAPACITOR CH 25V 0.1U	3	

Ref.No.	Part No.	Part Name & Description	Pcs	Remarks
C5010	ECUX1H121JCV	C.CAPACITOR CH 50V 120P	1	
C5011,12	ECUX1E104ZFV	C.CAPACITOR CH 25V 0.1U	2	
C5013	ECUX1H121JCV	C.CAPACITOR CH 50V 120P	1	
C5014-20	ECUX1E104ZFV	C.CAPACITOR CH 25V 0.1U	7	
C5101-03	EEVHB1C470	E.CAPACITOR 16V 47U	3	
C5104-06	ECUX1C104KBV	C.CAPACITOR CH 16V 0.1U	3	
C5107-09	EEVHB1C100	E.CAPACITOR 16V 10U	3	
C5110,11	ECUX1C104KBV	C.CAPACITOR CH 16V 0.1U	2	
C5112-14	EEVHB1C470	E.CAPACITOR 16V 47U	3	
C5115-17	ECUX1C104KBV	C.CAPACITOR CH 16V 0.1U	3	
C5118	EEVHB1C100	E.CAPACITOR 16V 10U	1	
C5119,20	EEVHB1C470	E.CAPACITOR 16V 47U	2	
C5121,22	ECUX1C104KBV	C.CAPACITOR CH 16V 0.1U	2	
C5123,24	EEVHB0J101	E.CAPACITOR 6.3V 100U	2	
C5125,26	EEVHB0J470	E.CAPACITOR 6.3V 47U	2	
C5301,02	EEVHB1H2R2	E.CAPACITOR 50V 2.2U	2	
C5303-06	ECUX1E104ZFV	C.CAPACITOR CH 25V 0.1U	4	
C5307-09	ECUX1C104KBV	C.CAPACITOR CH 16V 0.1U	3	
C5310	ECUX1H390JCV	C.CAPACITOR CH 50V 39P	1	
C5311	ECUX1H120JCV	C.CAPACITOR CH 50V 12P	1	
C5312-15	ECUX1E104ZFV	C.CAPACITOR CH 25V 0.1U	4	
C5316	ECUX1H101JCV	C.CAPACITOR CH 50V 100P	1	
C5317,18	ECUX1E104ZFV	C.CAPACITOR CH 25V 0.1U	2	
C5319,20	ECUX1C104KBV	C.CAPACITOR CH 16V 0.1U	2	
C5321	ECUX1H100DCV	C.CAPACITOR CH 50V 10P	1	
C5322,23	ECUX1E104ZFV	C.CAPACITOR CH 25V 0.1U	2	
C5324,25	ECUX1C104KBV	C.CAPACITOR CH 16V 0.1U	2	
C5326,27	ECUX1E104ZFV	C.CAPACITOR CH 25V 0.1U	2	
C5328	ECUX1H680JCV	C.CAPACITOR CH 50V 68P	1	
C5332	ECUX1C104KBV	C.CAPACITOR CH 16V 0.1U	1	
C5333	ECUX1H103KBV	C.CAPACITOR CH 50V 0.01U	1	
C5334	ECUX1C473KBV	C.CAPACITOR CH 16V 0.047U	1	
C5336	ECUX1C683KBV	C.CAPACITOR CH 16V 0.068U	1	
C5337	ECUX1C104KBV	C.CAPACITOR CH 16V 0.1U	1	
C5338	ECUX1H820JCV	C.CAPACITOR CH 50V 82P	1	
C5339	ECUV1H470JCV	C.CAPACITOR CH 50V 47P	1	
C5340	ECUX1H180JCV	C.CAPACITOR CH 50V 18P	1	
C5341	ECUX1H391JCV	C.CAPACITOR CH 50V 390P	1	
C5342	ECUX1H820JCV	C.CAPACITOR CH 50V 82P	1	
C5343	ECUV1H470JCV	C.CAPACITOR CH 50V 47P	1	
C5344	ECUX1C104KBV	C.CAPACITOR CH 16V 0.1U	1	
C5346,47	ECUX1E104ZFV	C.CAPACITOR CH 25V 0.1U	2	
C5348,49	ECUX1C104KBV	C.CAPACITOR CH 16V 0.1U	2	
C5350-53	ECUX1E104ZFV	C.CAPACITOR CH 25V 0.1U	4	
C5354	ECUX1C104KBV	C.CAPACITOR CH 16V 0.1U	1	
C5355	ECUX1H122KBV	C.CAPACITOR CH 50V 1200P	1	
C5356	ECUX1H332KBV	C.CAPACITOR CH 50V 3300P	1	
C5357	ECUX1C104KBV	C.CAPACITOR CH 16V 0.1U	1	
C5359,60	ECUX1E104ZFV	C.CAPACITOR CH 25V 0.1U	2	
C5361,62	ECUX1H222KBV	C.CAPACITOR CH 50V 2200P	2	
C5363-65	ECUX1C104KBV	C.CAPACITOR CH 16V 0.1U	3	
C5366,67	ECUX1E104ZFV	C.CAPACITOR CH 25V 0.1U	2	
C5368,69	ECUX1C104KBV	C.CAPACITOR CH 16V 0.1U	2	
C5370-72	ECUX1E104ZFV	C.CAPACITOR CH 25V 0.1U	3	
C5380-89	ECUX1E104ZFV	C.CAPACITOR CH 25V 0.1U	10	
C5491	ECUX1E104ZFV	C.CAPACITOR CH 25V 0.1U	1	
C5492	ECUM1C224KBN	C.CAPACITOR CH 16V 0.22U	1	
C5493	ECUX1H103KBV	C.CAPACITOR CH 50V 0.01U	1	
C5494-99	ECUX1C104KBV	C.CAPACITOR CH 16V 0.1U	6	
C5500	ECUX1A105KBN	C.CAPACITOR CH 10V 1U	1	
C5501	ECUX1C104KBV	C.CAPACITOR CH 16V 0.1U	1	
C5502	ECUX1A105KBN	C.CAPACITOR CH 10V 1U	1	
C5503,04	ECUX1C104KBV	C.CAPACITOR CH 16V 0.1U	2	
C5506-25	ECUX1E104ZFV	C.CAPACITOR CH 25V 0.1U	20	
C5528,29	ECUX1E104ZFV	C.CAPACITOR CH 25V 0.1U	2	
C5530	ECUX1C104KBV	C.CAPACITOR CH 16V 0.1U	1	
C5531-33	ECUX1E104ZFV	C.CAPACITOR CH 25V 0.1U	3	
C5535-37	ECUX1E104ZFV	C.CAPACITOR CH 25V 0.1U	3	
C5538	ECUX1C333KBV	C.CAPACITOR CH 16V 0.033U	1	
C5540	ECUX1H222KBV	C.CAPACITOR CH 50V 2200P	1	
C5542	ECKF1H152KB	C.CAPACITOR 50V 1500P	1	
C5601,02	EEVHB1H2R2	E.CAPACITOR 50V 2.2U	2	
C5603-06	ECUX1E104ZFV	C.CAPACITOR CH 25V 0.1U	4	
C5607-09	ECUX1C104KBV	C.CAPACITOR CH 16V 0.1U	3	
C5610	ECUX1H390JCV	C.CAPACITOR CH 50V 39P	1	

Ref.No.	Part No.	Part Name & Description	Pcs	Remarks
C5611	ECUX1H120JCV	C.CAPACITOR CH 50V 12P	1	
C5612-15	ECUX1E104ZFV	C.CAPACITOR CH 25V 0.1U	4	
C5616	ECUX1H101JCV	C.CAPACITOR CH 50V 100P	1	
C5617,18	ECUX1E104ZFV	C.CAPACITOR CH 25V 0.1U	2	
C5619,20	ECUX1C104KBV	C.CAPACITOR CH 16V 0.1U	2	
C5621	ECUX1H100DCV	C.CAPACITOR CH 50V 10P	1	
C5622,23	ECUX1E104ZFV	C.CAPACITOR CH 25V 0.1U	2	
C5624,25	ECUX1C104KBV	C.CAPACITOR CH 16V 0.1U	2	
C5626,27	ECUX1E104ZFV	C.CAPACITOR CH 25V 0.1U	2	
C5628	ECUX1H680JCV	C.CAPACITOR CH 50V 68P	1	
C5632	ECUX1C104KBV	C.CAPACITOR CH 16V 0.1U	1	
C5633	ECUX1H103KBV	C.CAPACITOR CH 50V 0.01U	1	
C5634	ECUX1C473KBV	C.CAPACITOR CH 16V 0.047U	1	
C5636	ECUX1C683KBV	C.CAPACITOR CH 16V 0.068U	1	
C5637	ECUX1C104KBV	C.CAPACITOR CH 16V 0.1U	1	
C5638	ECUX1H820JCV	C.CAPACITOR CH 50V 82P	1	
C5639	ECUV1H470JCV	C.CAPACITOR CH 50V 47P	1	
C5640	ECUX1H180JCV	C.CAPACITOR CH 50V 18P	1	
C5641	ECUX1H391JCV	C.CAPACITOR CH 50V 390P	1	
C5642	ECUX1H820JCV	C.CAPACITOR CH 50V 82P	1	
C5643	ECUV1H470JCV	C.CAPACITOR CH 50V 47P	1	
C5644	ECUX1C104KBV	C.CAPACITOR CH 16V 0.1U	1	
C5646,47	ECUX1E104ZFV	C.CAPACITOR CH 25V 0.1U	2	
C5648,49	ECUX1C104KBV	C.CAPACITOR CH 16V 0.1U	2	
C5650-53	ECUX1E104ZFV	C.CAPACITOR CH 25V 0.1U	4	
C5654	ECUX1C104KBV	C.CAPACITOR CH 16V 0.1U	1	
C5655	ECUX1H122KBV	C.CAPACITOR CH 50V 1200P	1	
C5656	ECUX1H332KBV	C.CAPACITOR CH 50V 3300P	1	
C5657	ECUX1C104KBV	C.CAPACITOR CH 16V 0.1U	1	
C5659,60	ECUX1E104ZFV	C.CAPACITOR CH 25V 0.1U	2	
C5661,62	ECUX1H222KBV	C.CAPACITOR CH 50V 2200P	2	
C5663-65	ECUX1C104KBV	C.CAPACITOR CH 16V 0.1U	3	
C5666,67	ECUX1E104ZFV	C.CAPACITOR CH 25V 0.1U	2	
C5668,69	ECUX1C104KBV	C.CAPACITOR CH 16V 0.1U	2	
C5672	ECUX1E104ZFV	C.CAPACITOR CH 25V 0.1U	1	
C5680-89	ECUX1E104ZFV	C.CAPACITOR CH 25V 0.1U	10	
C5791	ECUX1E104ZFV	C.CAPACITOR CH 25V 0.1U	1	
C5792	ECUM1C224KBN	C.CAPACITOR CH 16V 0.22U	1	
C5793	ECUX1H103KBV	C.CAPACITOR CH 50V 0.01U	1	
C5794-99	ECUX1C104KBV	C.CAPACITOR CH 16V 0.1U	6	
C5800	ECUX1A105KBN	C.CAPACITOR CH 10V 1U	1	
C5801	ECUX1C104KBV	C.CAPACITOR CH 16V 0.1U	1	
C5802	ECUX1A105KBN	C.CAPACITOR CH 10V 1U	1	
C5803,04	ECUX1C104KBV	C.CAPACITOR CH 16V 0.1U	2	
C5806-25	ECUX1E104ZFV	C.CAPACITOR CH 25V 0.1U	20	
C5828,29	ECUX1E104ZFV	C.CAPACITOR CH 25V 0.1U	2	
C5830	ECUX1C104KBV	C.CAPACITOR CH 16V 0.1U	1	
C5831-33	ECUX1E104ZFV	C.CAPACITOR CH 25V 0.1U	3	
C5837	ECUX1E104ZFV	C.CAPACITOR CH 25V 0.1U	1	
C5838	ECUX1C333KBV	C.CAPACITOR CH 16V 0.033U	1	
C5840	ECUX1H222KBV	C.CAPACITOR CH 50V 2200P	1	
C5842	ECKF1H152KB	C.CAPACITOR 50V 1500P	1	
D5301	MA142K	DIODE	1	
D5601	MA142K	DIODE	1	
FL5101-06	VLF0931	FILTER	6	F1Y2A1030001
IC5001,02	TVHC244FT	IC	2	
IC5003	NJM084V	IC	1	
IC5004	TC7SH04FU	IC	1	
IC5005,06	TC4S30F	IC	2	C0JBAZ000429
IC5007	MC10H125M	IC	1	
IC5008	TC4S30F	IC	1	C0JBAZ000429
IC5101	AN7805F	IC	1	
IC5102	AN7905F	IC	1	
IC5103,04	LT1086CM	IC	2	C0CBAYG00001
IC5301	MC1495D	IC	1	
IC5302-04	UPC1663G	IC	3	C1CB00000329
IC5305	NJM084V	IC	1	
IC5306	NJM319V	IC	1	
IC5307	TC7SH04FU	IC	1	
IC5310	MN673796	IC	1	
IC5311	NJM084V	IC	1	
IC5312	TLCX244FT	IC	1	

Ref.No.	Part No.	Part Name & Description	Pcs	Remarks
IC5313,14	TLCX574FT	IC	2	
IC5315	MC10H124M	IC	1	C0JBZZ000020
IC5601	MC1495D	IC	1	
IC5602-04	UPC1663G	IC	3	C1CB00000329
IC5605	NJM084V	IC	1	
IC5607	TC7SH04FU	IC	1	
IC5610	MN673796	IC	1	
IC5611	NJM084V	IC	1	
IC5612	TLCX244FT	IC	1	
IC5613,14	TLCX574FT	IC	2	
L5101-04	ELESN4R7JA	COIL 4.7UH	4	
L5301	VLQ0163MR27	COIL 0.27UH	1	
L5302	VLQ0163JR47	COIL 0.47UH	1	G1CR47J00004
L5303,04	VLQ0163J101	COIL 100UH	2	
L5305,06	VLQ0163JR22	COIL 0.22UH	2	G1CR22J00002
L5307	VLQ0163J6R8	COIL 6.8UH	1	G1C6R8J00007
L5601	VLQ0163MR27	COIL 0.27UH	1	
L5602	VLQ0163JR47	COIL 0.47UH	1	G1CR47J00004
L5603,04	VLQ0163J101	COIL 100UH	2	
L5605,06	VLQ0163JR22	COIL 0.22UH	2	G1CR22J00002
L5607	VLQ0163J6R8	COIL 6.8UH	1	G1C6R8J00007
P5101	VJP3454B096	CONNECTOR (MALE)	1	K1KA96B00021
P5102	VJP1230T	CONNECTOR (MALE) 3P	1	
P5103	VJP1230R	CONNECTOR (MALE)	1	K1KA03A00198
Q5001,02	2SA1532	TRANSISTOR	2	
Q5301	XN6537	TRANSISTOR-RESISTOR	1	
Q5302,03	2SC3930	TRANSISTOR	2	
Q5304,05	2SD1979	TRANSISTOR	2	
Q5306	XN5531	TRANSISTOR-RESISTOR	1	
Q5307	2SC3930	TRANSISTOR	1	
Q5308,09	2SD1979	TRANSISTOR	2	
Q5310,11	XN5531	TRANSISTOR-RESISTOR	2	
Q5312,13	2SK508K512	TRANSISTOR	2	
Q5314,15	2SC3930	TRANSISTOR	2	
Q5316,17	2SD1979	TRANSISTOR	2	
Q5318	2SC3930	TRANSISTOR	1	
Q5319	XN6537	TRANSISTOR-RESISTOR	1	
Q5320,21	2SC3930	TRANSISTOR	2	
Q5322	XN5531	TRANSISTOR-RESISTOR	1	
Q5323	2SC3930	TRANSISTOR	1	
Q5324	2SC3130	TRANSISTOR	1	
Q5325	2SC3930	TRANSISTOR	1	
Q5326,27	2SD1979	TRANSISTOR	2	
Q5328-30	2SC3930	TRANSISTOR	3	
Q5331	2SD1819A-R	TRANSISTOR	1	
Q5350,51	2SA1532	TRANSISTOR	2	
Q5352	2SC3930	TRANSISTOR	1	
Q5353	2SC3130	TRANSISTOR	1	
Q5601	XN6537	TRANSISTOR-RESISTOR	1	
Q5602,03	2SC3930	TRANSISTOR	2	
Q5604,05	2SD1979	TRANSISTOR	2	
Q5606	XN5531	TRANSISTOR-RESISTOR	1	
Q5607	2SC3930	TRANSISTOR	1	
Q5608,09	2SD1979	TRANSISTOR	2	
Q5610,11	XN5531	TRANSISTOR-RESISTOR	2	
Q5612,13	2SK508K512	TRANSISTOR	2	
Q5614,15	2SC3930	TRANSISTOR	2	
Q5616,17	2SD1979	TRANSISTOR	2	
Q5618	2SC3930	TRANSISTOR	1	
Q5619	XN6537	TRANSISTOR-RESISTOR	1	
Q5620,21	2SC3930	TRANSISTOR	2	
Q5622	XN5531	TRANSISTOR-RESISTOR	1	
Q5623	2SC3930	TRANSISTOR	1	
Q5624	2SC3130	TRANSISTOR	1	
Q5625	2SC3930	TRANSISTOR	1	
Q5626,27	2SD1979	TRANSISTOR	2	
Q5628-30	2SC3930	TRANSISTOR	3	
Q5631	2SD1819A-R	TRANSISTOR	1	
Q5650,51	2SA1532	TRANSISTOR	2	
Q5652	2SC3930	TRANSISTOR	1	
Q5653	2SC3130	TRANSISTOR	1	

Ref.No.	Part No.	Part Name & Description	Pcs	Remarks
R5001	ERJ3GEYJ103	M.RESISTOR CH 1/16W 10K	1	
R5002	ERJ3GEYJ470	M.RESISTOR CH 1/16W 47	1	
R5003	ERJ3GEYJ101	M.RESISTOR CH 1/16W 100	1	
R5004	ERJ3GEYJ103	M.RESISTOR CH 1/16W 10K	1	
R5005	ERJ3GEYJ470	M.RESISTOR CH 1/16W 47	1	
R5006	ERJ3GEYJ101	M.RESISTOR CH 1/16W 100	1	
R5011	ERJ3GEYJ103	M.RESISTOR CH 1/16W 10K	1	
R5012	ERJ3GEYJ101	M.RESISTOR CH 1/16W 100	1	
R5013	ERJ3GEYJ103	M.RESISTOR CH 1/16W 10K	1	
R5014	ERJ3GEYJ101	M.RESISTOR CH 1/16W 100	1	
R5015	ERJ3GEYJ103	M.RESISTOR CH 1/16W 10K	1	
R5016	ERJ3GEYJ101	M.RESISTOR CH 1/16W 100	1	
R5017	ERJ3GEYJ103	M.RESISTOR CH 1/16W 10K	1	
R5018	ERJ3GEYJ101	M.RESISTOR CH 1/16W 100	1	
R5020	ERJ3GEYJ101	M.RESISTOR CH 1/16W 100	1	
R5022	ERJ3GEYJ101	M.RESISTOR CH 1/16W 100	1	
R5024	ERJ3GEYJ101	M.RESISTOR CH 1/16W 100	1	
R5026	ERJ3GEYJ101	M.RESISTOR CH 1/16W 100	1	
R5027	ERJ3GEYJ103	M.RESISTOR CH 1/16W 10K	1	
R5028	ERJ3GEYJ101	M.RESISTOR CH 1/16W 100	1	
R5029	ERJ3GEYJ103	M.RESISTOR CH 1/16W 10K	1	
R5031	ERJ3GEYJ103	M.RESISTOR CH 1/16W 10K	1	
R5032	ERJ3GEYJ101	M.RESISTOR CH 1/16W 100	1	
R5033,34	ERJ3GEYJ123	M.RESISTOR CH 1/16W 12K	2	
R5035,36	ERJ3GEYJ103	M.RESISTOR CH 1/16W 10K	2	
R5037	ERJ3GEYJ101	M.RESISTOR CH 1/16W 100	1	
R5038,39	ERJ3GEYJ123	M.RESISTOR CH 1/16W 12K	2	
R5040,41	ERJ3GEYJ103	M.RESISTOR CH 1/16W 10K	2	
R5042	ERJ3GEYJ101	M.RESISTOR CH 1/16W 100	1	
R5043	ERJ3GEYJ273	M.RESISTOR CH 1/16W 27K	1	
R5044	ERJ3GEYJ101	M.RESISTOR CH 1/16W 100	1	
R5045	ERJ3GEYJ273	M.RESISTOR CH 1/16W 27K	1	
R5046	ERJ3GEYJ101	M.RESISTOR CH 1/16W 100	1	
R5047	ERJ3GEYJ103	M.RESISTOR CH 1/16W 10K	1	
R5048	ERJ3GEYJ101	M.RESISTOR CH 1/16W 100	1	
R5049	ERJ3GEYG472	M.RESISTOR CH 1/16W 4.7K	1	
R5051	ERJ3GEYJ101	M.RESISTOR CH 1/16W 100	1	
R5052	ERJ3GEYJ273	M.RESISTOR CH 1/16W 27K	1	
R5053	ERJ3GEYJ101	M.RESISTOR CH 1/16W 100	1	
R5054	ERJ3GEYJ273	M.RESISTOR CH 1/16W 27K	1	
R5055	ERJ3GEYJ101	M.RESISTOR CH 1/16W 100	1	
R5056	ERJ3GEYJ103	M.RESISTOR CH 1/16W 10K	1	
R5057	ERJ3GEYJ101	M.RESISTOR CH 1/16W 100	1	
R5058	ERJ3GEYG472	M.RESISTOR CH 1/16W 4.7K	1	
R5060	ERJ3GEYJ101	M.RESISTOR CH 1/16W 100	1	
R5061,62	ERJ3GEY0R00	M.RESISTOR CH 1/16W 0	2	
R5063	ERJ3GEYJ221	M.RESISTOR CH 1/16W 220	1	
R5064	ERJ3GEYJ101	M.RESISTOR CH 1/16W 100	1	
R5065	ERJ3GEYG102	M.RESISTOR CH 1/16W 1K	1	
R5066	ERJ3GEYG471	M.RESISTOR CH 1/16W 470	1	
R5067	ERJ3GEYG102	M.RESISTOR CH 1/16W 1K	1	
R5068	ERJ3GEYG471	M.RESISTOR CH 1/16W 470	1	
R5069	ERJ3GEYG102	M.RESISTOR CH 1/16W 1K	1	
R5070	ERJ3GEYG471	M.RESISTOR CH 1/16W 470	1	
R5071	ERJ3GEYJ103	M.RESISTOR CH 1/16W 10K	1	
R5072,73	ERJ3GEYJ101	M.RESISTOR CH 1/16W 100	2	
R5074	ERJ3GEYJ103	M.RESISTOR CH 1/16W 10K	1	
R5075	ERJ3GEY0R00	M.RESISTOR CH 1/16W 0	1	
R5101-05	ERJ3GEY0R00	M.RESISTOR CH 1/16W 0	5	
R5106	ERJ3GEYJ103	M.RESISTOR CH 1/16W 10K	1	
R5107-13	ERJ3GEY0R00	M.RESISTOR CH 1/16W 0	7	
R5114	ERJ3RBD121	M.RESISTOR CH 1/16W 120	1	
R5115	ERJ3RBD151	M.RESISTOR CH 1/16W 150	1	
R5116	ERJ3RBD121	M.RESISTOR CH 1/16W 120	1	
R5117	ERJ3RBD151	M.RESISTOR CH 1/16W 150	1	
R5118	ERJ3GEY0R00	M.RESISTOR CH 1/16W 0	1	
R5120	ERJ3GEY0R00	M.RESISTOR CH 1/16W 0	1	
R5122	ERJ3GEY0R00	M.RESISTOR CH 1/16W 0	1	
R5124	ERJ3GEY0R00	M.RESISTOR CH 1/16W 0	1	
R5127-29	ERJ3GEY0R00	M.RESISTOR CH 1/16W 0	3	
R5131-34	ERJ3GEY0R00	M.RESISTOR CH 1/16W 0	4	
R5135-38	ERJ3GEYJ101	M.RESISTOR CH 1/16W 100	4	
R5301-04	ERJ3GEYJ470	M.RESISTOR CH 1/16W 47	4	
R5305	ERJ3RBD271	M.RESISTOR CH 1/16W 270	1	
R5306	ERJ3RBD181	M.RESISTOR CH 1/16W 180	1	

Ref.No.	Part No.	Part Name & Description	Pcs	Remarks
R5307,08	ERJ3GEYJ103	M.RESISTOR CH 1/16W 10K	2	
R5309,10	ERJ3GEYJ330	M.RESISTOR CH 1/16W 33	2	
R5311	ERJ3RBD682	M.RESISTOR CH 1/16W 6.8K	1	
R5312	ERJ3RBD822	M.RESISTOR CH 1/16W 8.2K	1	
R5313,14	ERJ3RBD561	M.RESISTOR CH 1/16W 560	2	
R5315	ERJ3RBD151	M.RESISTOR CH 1/16W 150	1	
R5316,17	ERJ3RBD561	M.RESISTOR CH 1/16W 560	2	
R5318,19	ERJ3GEYJ470	M.RESISTOR CH 1/16W 47	2	
R5320,21	ERJ3GEYJ330	M.RESISTOR CH 1/16W 33	2	
R5322	ERJ3GEYJ470	M.RESISTOR CH 1/16W 47	1	
R5323	ERJ3GEYJ122	M.RESISTOR CH 1/16W 1.2K	1	
R5324	ERJ3GEYG472	M.RESISTOR CH 1/16W 4.7K	1	
R5325	ERJ3GEYJ470	M.RESISTOR CH 1/16W 47	1	
R5326,27	ERJ3GEYJ272	M.RESISTOR CH 1/16W 2.7K	2	
R5328,29	ERJ3GEYJ470	M.RESISTOR CH 1/16W 47	2	
R5330,31	ERJ3GEYG152	M.RESISTOR CH 1/16W 1.5K	2	
R5332,33	ERJ3GEYJ103	M.RESISTOR CH 1/16W 10K	2	
R5334	ERJ3GEYJ101	M.RESISTOR CH 1/16W 100	1	
R5335,36	ERJ3GEYJ470	M.RESISTOR CH 1/16W 47	2	
R5337,38	ERJ3GEYJ330	M.RESISTOR CH 1/16W 33	2	
R5339,40	ERJ3GEYG472	M.RESISTOR CH 1/16W 4.7K	2	
R5341,42	ERJ3GEYJ470	M.RESISTOR CH 1/16W 47	2	
R5343	ERJ3GEYG332	M.RESISTOR CH 1/16W 3.3K	1	
R5344	ERJ3RBD151	M.RESISTOR CH 1/16W 150	1	
R5345	ERJ3GEYJ470	M.RESISTOR CH 1/16W 47	1	
R5346	ERJ3RBD272	M.RESISTOR CH 1/16W 2.7K	1	
R5347	ERJ3GEYG332	M.RESISTOR CH 1/16W 3.3K	1	
R5348	ERJ3GEY0R00	M.RESISTOR CH 1/16W 0	1	
R5349	ERJ3GEYJ181	M.RESISTOR CH 1/16W 180	1	
R5350	ERJ3RED680	M.RESISTOR CH 1/16W 68	1	
R5351,52	ERJ3RBD151	M.RESISTOR CH 1/16W 150	2	
R5353,54	ERJ3GEYG102	M.RESISTOR CH 1/16W 1K	2	
R5355,56	ERJ3GEYJ470	M.RESISTOR CH 1/16W 47	2	
R5358,59	ERJ3GEYG152	M.RESISTOR CH 1/16W 1.5K	2	
R5360,61	ERJ3GEYG102	M.RESISTOR CH 1/16W 1K	2	
R5362,63	ERJ3GEYJ470	M.RESISTOR CH 1/16W 47	2	
R5364,65	ERJ3GEYJ330	M.RESISTOR CH 1/16W 33	2	
R5366,67	ERJ3GEYJ681	M.RESISTOR CH 1/16W 680	2	
R5368	ERJ3RBD121	M.RESISTOR CH 1/16W 120	1	
R5369	ERJ3RBD333	M.RESISTOR CH 1/16W 33K	1	
R5370	ERJ3RBD271	M.RESISTOR CH 1/16W 270	1	
R5371	ERJ3RBD121	M.RESISTOR CH 1/16W 120	1	
R5372	ERJ3RBD333	M.RESISTOR CH 1/16W 33K	1	
R5373,74	ERJ3GEYG152	M.RESISTOR CH 1/16W 1.5K	2	
R5375	ERJ3GEYJ470	M.RESISTOR CH 1/16W 47	1	
R5376	ERJ3GEYJ821	M.RESISTOR CH 1/16W 820	1	
R5377-79	ERJ3GEYJ470	M.RESISTOR CH 1/16W 47	3	
R5380	ERJ3GEYJ182	M.RESISTOR CH 1/16W 1.8K	1	
R5381	ERJ3GEYJ470	M.RESISTOR CH 1/16W 47	1	
R5382,83	ERJ3GEYJ103	M.RESISTOR CH 1/16W 10K	2	
R5384,85	ERJ3GEYJ470	M.RESISTOR CH 1/16W 47	2	
R5386	ERJ3GEYG472	M.RESISTOR CH 1/16W 4.7K	1	
R5387,88	ERJ3GEYG102	M.RESISTOR CH 1/16W 1K	2	
R5389,90	ERJ3GEYJ470	M.RESISTOR CH 1/16W 47	2	
R5392,93	ERJ3GEYG152	M.RESISTOR CH 1/16W 1.5K	2	
R5394,95	ERJ3GEYG102	M.RESISTOR CH 1/16W 1K	2	
R5396,97	ERJ3GEYJ470	M.RESISTOR CH 1/16W 47	2	
R5398	ERJ3RBD271	M.RESISTOR CH 1/16W 270	1	
R5399,00	ERJ3GEYJ330	M.RESISTOR CH 1/16W 33	2	
R5401	ERJ3RBD682	M.RESISTOR CH 1/16W 6.8K	1	
R5402	ERJ3RBD822	M.RESISTOR CH 1/16W 8.2K	1	
R5403,04	ERJ3RBD561	M.RESISTOR CH 1/16W 560	2	
R5405	ERJ3RBD151	M.RESISTOR CH 1/16W 150	1	
R5406,07	ERJ3RBD561	M.RESISTOR CH 1/16W 560	2	
R5408,09	ERJ3GEYJ470	M.RESISTOR CH 1/16W 47	2	
R5410,11	ERJ3GEYJ330	M.RESISTOR CH 1/16W 33	2	
R5412,13	ERJ3GEYG472	M.RESISTOR CH 1/16W 4.7K	2	
R5414-16	ERJ3GEYJ470	M.RESISTOR CH 1/16W 47	3	
R5417	ERJ6GEYG391	M.RESISTOR CH 1/10W 390	1	
R5418-20	ERJ3GEYJ470	M.RESISTOR CH 1/16W 47	3	
R5421	ERJ3GEYG102	M.RESISTOR CH 1/16W 1K	1	
R5422	ERJ3GEYJ101	M.RESISTOR CH 1/16W 100	1	
R5423	ERJ3GEYJ470	M.RESISTOR CH 1/16W 47	1	
R5424	ERJ3GEYG472	M.RESISTOR CH 1/16W 4.7K	1	
R5425,26	ERJ3GEYG102	M.RESISTOR CH 1/16W 1K	2	

Ref.No.	Part No.	Part Name & Description	Pcs	Remarks
R5427,28	ERJ3GEYJ470	M.RESISTOR CH 1/16W 47	2	
R5430	ERJ3RBD681	M.RESISTOR CH 1/16W 680	1	
R5432,33	ERJ3GEYJ103	M.RESISTOR CH 1/16W 10K	2	
R5434-36	ERJ3GEYG102	M.RESISTOR CH 1/16W 1K	3	
R5437	ERJ3GEYJ470	M.RESISTOR CH 1/16W 47	1	
R5438	ERJ3GEY0R00	M.RESISTOR CH 1/16W 0	1	
R5439	ERJ3GEYJ392	M.RESISTOR CH 1/16W 3.9K	1	
R5440	ERJ3GEY0R00	M.RESISTOR CH 1/16W 0	1	
R5441	ERJ3GEYJ470	M.RESISTOR CH 1/16W 47	1	
R5442	ERJ6GEYF561	M.RESISTOR CH 1/10W 560	1	
R5443	ERJ3GEYG472	M.RESISTOR CH 1/16W 4.7K	1	
R5444	ERJ3GEYJ470	M.RESISTOR CH 1/16W 47	1	
R5445	ERJ6GEYG122	M.RESISTOR CH 1/10W 1.2K	1	
R5446	ERJ3GEYJ750	M.RESISTOR CH 1/16W 75	1	
R5447	ERJ3GEYJ101	M.RESISTOR CH 1/16W 100	1	
R5448	ERJ3GEYJ153	M.RESISTOR CH 1/16W 15K	1	
R5449	ERJ3GEYJ392	M.RESISTOR CH 1/16W 3.9K	1	
R5450	ERJ3GEYJ333	M.RESISTOR CH 1/16W 33K	1	
R5451	ERJ3GEYG682	M.RESISTOR CH 1/16W 6.8K	1	
R5452	ERJ3GEYG472	M.RESISTOR CH 1/16W 4.7K	1	
R5453	ERJ3GEYJ473	M.RESISTOR CH 1/16W 47K	1	
R5454	ERJ3GEYG472	M.RESISTOR CH 1/16W 4.7K	1	
R5455	ERJ3GEYJ101	M.RESISTOR CH 1/16W 100	1	
R5487	ERJ3GEYJ101	M.RESISTOR CH 1/16W 100	1	
R5491	ERJ3GEYJ103	M.RESISTOR CH 1/16W 10K	1	
R5492	ERJ3GEY0R00	M.RESISTOR CH 1/16W 0	1	
R5495	ERJ3GEYJ681	M.RESISTOR CH 1/16W 680	1	
R5496	ERJ3GEYG102	M.RESISTOR CH 1/16W 1K	1	
R5497,98	ERJ3RBD102	M.RESISTOR CH 1/16W 1K	2	
R5499	ERJ3GEYJ681	M.RESISTOR CH 1/16W 680	1	
R5500	ERJ3GEYJ331	M.RESISTOR CH 1/16W 330	1	
R5501	ERJ3GEYG472	M.RESISTOR CH 1/16W 4.7K	1	
R5502	ERJ3GEYJ681	M.RESISTOR CH 1/16W 680	1	
R5503	ERJ3GEY0R00	M.RESISTOR CH 1/16W 0	1	
R5507	ERJ3GEYJ470	M.RESISTOR CH 1/16W 47	1	
R5508	ERJ3RED680	M.RESISTOR CH 1/16W 68	1	
R5509	ERJ3GEYJ470	M.RESISTOR CH 1/16W 47	1	
R5510	ERJ3GEYJ391	M.RESISTOR CH 1/16W 390	1	
R5511	ERJ3GEYG152	M.RESISTOR CH 1/16W 1.5K	1	
R5512	ERJ3RBD821	M.RESISTOR CH 1/16W 820	1	
R5513	ERJ3RBD471	M.RESISTOR CH 1/16W 470	1	
R5514	ERJ3GEY0R00	M.RESISTOR CH 1/16W 0	1	
R5515	ERJ3GEYJ222	M.RESISTOR CH 1/16W 2.2K	1	
R5516	ERJ3GEYG152	M.RESISTOR CH 1/16W 1.5K	1	
R5517	ERJ3GEY0R00	M.RESISTOR CH 1/16W 0	1	
R5521	ERJ3GEYJ101	M.RESISTOR CH 1/16W 100	1	
R5526	ERJ3GEYJ101	M.RESISTOR CH 1/16W 100	1	
R5527	ERJ3GEYJ103	M.RESISTOR CH 1/16W 10K	1	
R5528	ERJ3GEY0R00	M.RESISTOR CH 1/16W 0	1	
R5529	ERJ3GEYJ101	M.RESISTOR CH 1/16W 100	1	
R5530	ERJ3RBD561	M.RESISTOR CH 1/16W 560	1	
R5531	ERJ3RBD122	M.RESISTOR CH 1/16W 1.2K	1	
R5532	ERJ3RBD242	M.RESISTOR CH 1/16W 2.4K	1	
R5533	ERJ3RBD472	M.RESISTOR CH 1/16W 4.7K	1	
R5534	ERJ3RBD103	M.RESISTOR CH 1/16W 10K	1	
R5535	ERJ3RBD203	M.RESISTOR CH 1/16W 20K	1	
R5536	ERJ3RBD393	M.RESISTOR CH 1/16W 39K	1	
R5537	ERJ3RBD753	M.RESISTOR CH 1/16W 75K	1	
R5538	ERJ3GEYJ470	M.RESISTOR CH 1/16W 47	1	
R5539	ERJ3GEYJ392	M.RESISTOR CH 1/16W 3.9K	1	
R5540	ERJ3GEY0R00	M.RESISTOR CH 1/16W 0	1	
R5541	ERJ3GEYJ101	M.RESISTOR CH 1/16W 100	1	
R5542	ERJ3RBD561	M.RESISTOR CH 1/16W 560	1	
R5543	ERJ3RBD122	M.RESISTOR CH 1/16W 1.2K	1	
R5544	ERJ3RBD242	M.RESISTOR CH 1/16W 2.4K	1	
R5545	ERJ3RBD472	M.RESISTOR CH 1/16W 4.7K	1	
R5546	ERJ3RBD103	M.RESISTOR CH 1/16W 10K	1	
R5547	ERJ3RBD203	M.RESISTOR CH 1/16W 20K	1	
R5548	ERJ3RBD393	M.RESISTOR CH 1/16W 39K	1	
R5549	ERJ3RBD753	M.RESISTOR CH 1/16W 75K	1	
R5550	ERJ3GEYJ271	M.RESISTOR CH 1/16W 270	1	
R5551	ERJ3GEYJ470	M.RESISTOR CH 1/16W 47	1	
R5552	ERJ6GEYG332	M.RESISTOR CH 1/10W 3.3K	1	
R5553-55	ERJ3GEYJ470	M.RESISTOR CH 1/16W 47	3	
R5556,57	ERJ3GEYJ101	M.RESISTOR CH 1/16W 100	2	

Ref.No.	Part No.	Part Name & Description	Pcs	Remarks
R5558-61	ERJ6GEYG471	M.RESISTOR CH 1/10W 470	4	
R5562-65	ERJ3GEYJ470	M.RESISTOR CH 1/16W 47	4	
R5566	ERJ3GEYJ330	M.RESISTOR CH 1/16W 33	1	
R5567	ERJ3GEYG472	M.RESISTOR CH 1/16W 4.7K	1	
R5568	ERJ3GEY0R00	M.RESISTOR CH 1/16W 0	1	
R5601-04	ERJ3GEYJ470	M.RESISTOR CH 1/16W 47	4	
R5605	ERJ3RBD271	M.RESISTOR CH 1/16W 270	1	
R5606	ERJ3RBD181	M.RESISTOR CH 1/16W 180	1	
R5607,08	ERJ3GEYJ103	M.RESISTOR CH 1/16W 10K	2	
R5609,10	ERJ3GEYJ330	M.RESISTOR CH 1/16W 33	2	
R5611	ERJ3RBD682	M.RESISTOR CH 1/16W 6.8K	1	
R5612	ERJ3RBD822	M.RESISTOR CH 1/16W 8.2K	1	
R5613,14	ERJ3RBD561	M.RESISTOR CH 1/16W 560	2	
R5615	ERJ3RBD151	M.RESISTOR CH 1/16W 150	1	
R5616,17	ERJ3RBD561	M.RESISTOR CH 1/16W 560	2	
R5618,19	ERJ3GEYJ470	M.RESISTOR CH 1/16W 47	2	
R5620,21	ERJ3GEYJ330	M.RESISTOR CH 1/16W 33	2	
R5622	ERJ3GEYJ470	M.RESISTOR CH 1/16W 47	1	
R5623	ERJ3GEYJ122	M.RESISTOR CH 1/16W 1.2K	1	
R5624	ERJ3GEYG472	M.RESISTOR CH 1/16W 4.7K	1	
R5625	ERJ3GEYJ470	M.RESISTOR CH 1/16W 47	1	
R5626,27	ERJ3GEYJ272	M.RESISTOR CH 1/16W 2.7K	2	
R5628,29	ERJ3GEYJ470	M.RESISTOR CH 1/16W 47	2	
R5630,31	ERJ3GEYG152	M.RESISTOR CH 1/16W 1.5K	2	
R5632,33	ERJ3GEYJ103	M.RESISTOR CH 1/16W 10K	2	
R5634	ERJ3GEYJ101	M.RESISTOR CH 1/16W 100	1	
R5635,36	ERJ3GEYJ470	M.RESISTOR CH 1/16W 47	2	
R5637,38	ERJ3GEYJ330	M.RESISTOR CH 1/16W 33	2	
R5639,40	ERJ3GEYG472	M.RESISTOR CH 1/16W 4.7K	2	
R5641,42	ERJ3GEYJ470	M.RESISTOR CH 1/16W 47	2	
R5643	ERJ3GEYG332	M.RESISTOR CH 1/16W 3.3K	1	
R5644	ERJ3RBD151	M.RESISTOR CH 1/16W 150	1	
R5645	ERJ3GEYJ470	M.RESISTOR CH 1/16W 47	1	
R5646	ERJ3RBD272	M.RESISTOR CH 1/16W 2.7K	1	
R5647	ERJ3GEYG332	M.RESISTOR CH 1/16W 3.3K	1	
R5648	ERJ3GEY0R00	M.RESISTOR CH 1/16W 0	1	
R5649	ERJ3GEYJ181	M.RESISTOR CH 1/16W 180	1	
R5650	ERJ3RED680	M.RESISTOR CH 1/16W 68	1	
R5651,52	ERJ3RBD151	M.RESISTOR CH 1/16W 150	2	
R5653,54	ERJ3GEYG102	M.RESISTOR CH 1/16W 1K	2	
R5655,56	ERJ3GEYJ470	M.RESISTOR CH 1/16W 47	2	
R5658,59	ERJ3GEYG152	M.RESISTOR CH 1/16W 1.5K	2	
R5660,61	ERJ3GEYG102	M.RESISTOR CH 1/16W 1K	2	
R5662,63	ERJ3GEYJ470	M.RESISTOR CH 1/16W 47	2	
R5664,65	ERJ3GEYJ330	M.RESISTOR CH 1/16W 33	2	
R5666,67	ERJ3GEYJ681	M.RESISTOR CH 1/16W 680	2	
R5668	ERJ3RBD121	M.RESISTOR CH 1/16W 120	1	
R5669	ERJ3RBD333	M.RESISTOR CH 1/16W 33K	1	
R5670	ERJ3RBD271	M.RESISTOR CH 1/16W 270	1	
R5671	ERJ3RBD121	M.RESISTOR CH 1/16W 120	1	
R5672	ERJ3RBD333	M.RESISTOR CH 1/16W 33K	1	
R5673,74	ERJ3GEYG152	M.RESISTOR CH 1/16W 1.5K	2	
R5675	ERJ3GEYJ470	M.RESISTOR CH 1/16W 47	1	
R5676	ERJ3GEYJ821	M.RESISTOR CH 1/16W 820	1	
R5677-79	ERJ3GEYJ470	M.RESISTOR CH 1/16W 47	3	
R5680	ERJ3GEYJ182	M.RESISTOR CH 1/16W 1.8K	1	
R5681	ERJ3GEYJ470	M.RESISTOR CH 1/16W 47	1	
R5682,83	ERJ3GEYJ103	M.RESISTOR CH 1/16W 10K	2	
R5684,85	ERJ3GEYJ470	M.RESISTOR CH 1/16W 47	2	
R5686	ERJ3GEYG472	M.RESISTOR CH 1/16W 4.7K	1	
R5687,88	ERJ3GEYG102	M.RESISTOR CH 1/16W 1K	2	
R5689,90	ERJ3GEYJ470	M.RESISTOR CH 1/16W 47	2	
R5692,93	ERJ3GEYG152	M.RESISTOR CH 1/16W 1.5K	2	
R5694,95	ERJ3GEYG102	M.RESISTOR CH 1/16W 1K	2	
R5696,97	ERJ3GEYJ470	M.RESISTOR CH 1/16W 47	2	
R5698	ERJ3RBD271	M.RESISTOR CH 1/16W 270	1	
R5699,00	ERJ3GEYJ330	M.RESISTOR CH 1/16W 33	2	
R5701	ERJ3RBD682	M.RESISTOR CH 1/16W 6.8K	1	
R5702	ERJ3RBD822	M.RESISTOR CH 1/16W 8.2K	1	
R5703,04	ERJ3RBD561	M.RESISTOR CH 1/16W 560	2	
R5705	ERJ3RBD151	M.RESISTOR CH 1/16W 150	1	
R5706,07	ERJ3RBD561	M.RESISTOR CH 1/16W 560	2	
R5708,09	ERJ3GEYJ470	M.RESISTOR CH 1/16W 47	2	
R5710,11	ERJ3GEYJ330	M.RESISTOR CH 1/16W 33	2	
R5712,13	ERJ3GEYG472	M.RESISTOR CH 1/16W 4.7K	2	

Ref.No.	Part No.	Part Name & Description	Pcs	Remarks
R5714-16	ERJ3GEYJ470	M.RESISTOR CH 1/16W 47	3	
R5717	ERJ6GEYG391	M.RESISTOR CH 1/10W 390	1	
R5718-20	ERJ3GEYJ470	M.RESISTOR CH 1/16W 47	3	
R5721	ERJ3GEYG102	M.RESISTOR CH 1/16W 1K	1	
R5722	ERJ3GEYJ101	M.RESISTOR CH 1/16W 100	1	
R5723	ERJ3GEYJ470	M.RESISTOR CH 1/16W 47	1	
R5724	ERJ3GEYG472	M.RESISTOR CH 1/16W 4.7K	1	
R5725,26	ERJ3GEYG102	M.RESISTOR CH 1/16W 1K	2	
R5727,28	ERJ3GEYJ470	M.RESISTOR CH 1/16W 47	2	
R5730	ERJ3RBD681	M.RESISTOR CH 1/16W 680	1	
R5732,33	ERJ3GEYJ103	M.RESISTOR CH 1/16W 10K	2	
R5734-36	ERJ3GEYG102	M.RESISTOR CH 1/16W 1K	3	
R5737	ERJ3GEYJ470	M.RESISTOR CH 1/16W 47	1	
R5738	ERJ3GEY0R00	M.RESISTOR CH 1/16W 0	1	
R5739	ERJ3GEYJ392	M.RESISTOR CH 1/16W 3.9K	1	
R5740	ERJ3GEY0R00	M.RESISTOR CH 1/16W 0	1	
R5741	ERJ3GEYJ470	M.RESISTOR CH 1/16W 47	1	
R5742	ERJ6GEYF561	M.RESISTOR CH 1/10W 560	1	
R5743	ERJ3GEYG472	M.RESISTOR CH 1/16W 4.7K	1	
R5744	ERJ3GEYJ470	M.RESISTOR CH 1/16W 47	1	
R5745	ERJ6GEYG122	M.RESISTOR CH 1/10W 1.2K	1	
R5746	ERJ3GEYJ750	M.RESISTOR CH 1/16W 75	1	
R5747	ERJ3GEYJ101	M.RESISTOR CH 1/16W 100	1	
R5748	ERJ3GEYJ153	M.RESISTOR CH 1/16W 15K	1	
R5749	ERJ3GEYJ392	M.RESISTOR CH 1/16W 3.9K	1	
R5750	ERJ3GEYJ333	M.RESISTOR CH 1/16W 33K	1	
R5751	ERJ3GEYG682	M.RESISTOR CH 1/16W 6.8K	1	
R5752	ERJ3GEYG472	M.RESISTOR CH 1/16W 4.7K	1	
R5753	ERJ3GEYJ473	M.RESISTOR CH 1/16W 47K	1	
R5754	ERJ3GEYG472	M.RESISTOR CH 1/16W 4.7K	1	
R5755	ERJ3GEYJ101	M.RESISTOR CH 1/16W 100	1	
R5787	ERJ3GEYJ101	M.RESISTOR CH 1/16W 100	1	
R5788	ERJ3GEY0R00	M.RESISTOR CH 1/16W 0	1	
R5791	ERJ3GEYJ103	M.RESISTOR CH 1/16W 10K	1	
R5792	ERJ3GEY0R00	M.RESISTOR CH 1/16W 0	1	
R5795	ERJ3GEYJ681	M.RESISTOR CH 1/16W 680	1	
R5796	ERJ3GEYG102	M.RESISTOR CH 1/16W 1K	1	
R5797,98	ERJ3RBD102	M.RESISTOR CH 1/16W 1K	2	
R5799	ERJ3GEYJ681	M.RESISTOR CH 1/16W 680	1	
R5800	ERJ3GEYJ331	M.RESISTOR CH 1/16W 330	1	
R5801	ERJ3GEYG472	M.RESISTOR CH 1/16W 4.7K	1	
R5802	ERJ3GEYJ681	M.RESISTOR CH 1/16W 680	1	
R5803	ERJ3GEY0R00	M.RESISTOR CH 1/16W 0	1	
R5807	ERJ3GEYJ470	M.RESISTOR CH 1/16W 47	1	
R5808	ERJ3RED680	M.RESISTOR CH 1/16W 68	1	
R5809	ERJ3GEYJ470	M.RESISTOR CH 1/16W 47	1	
R5810	ERJ3GEYJ391	M.RESISTOR CH 1/16W 390	1	
R5811	ERJ3GEYG152	M.RESISTOR CH 1/16W 1.5K	1	
R5812	ERJ3RBD821	M.RESISTOR CH 1/16W 820	1	
R5813	ERJ3RBD471	M.RESISTOR CH 1/16W 470	1	
R5814	ERJ3GEY0R00	M.RESISTOR CH 1/16W 0	1	
R5815	ERJ3GEYJ222	M.RESISTOR CH 1/16W 2.2K	1	
R5816	ERJ3GEYG152	M.RESISTOR CH 1/16W 1.5K	1	
R5817	ERJ3GEY0R00	M.RESISTOR CH 1/16W 0	1	
R5821	ERJ3GEYJ101	M.RESISTOR CH 1/16W 100	1	
R5826	ERJ3GEYJ101	M.RESISTOR CH 1/16W 100	1	
R5827	ERJ3GEYJ103	M.RESISTOR CH 1/16W 10K	1	
R5828	ERJ3GEY0R00	M.RESISTOR CH 1/16W 0	1	
R5829	ERJ3GEYJ101	M.RESISTOR CH 1/16W 100	1	
R5830	ERJ3RBD561	M.RESISTOR CH 1/16W 560	1	
R5831	ERJ3RBD122	M.RESISTOR CH 1/16W 1.2K	1	
R5832	ERJ3RBD242	M.RESISTOR CH 1/16W 2.4K	1	
R5833	ERJ3RBD472	M.RESISTOR CH 1/16W 4.7K	1	
R5834	ERJ3RBD103	M.RESISTOR CH 1/16W 10K	1	
R5835	ERJ3RBD203	M.RESISTOR CH 1/16W 20K	1	
R5836	ERJ3RBD393	M.RESISTOR CH 1/16W 39K	1	
R5837	ERJ3RBD753	M.RESISTOR CH 1/16W 75K	1	
R5838	ERJ3GEYJ470	M.RESISTOR CH 1/16W 47	1	
R5839	ERJ3GEYJ392	M.RESISTOR CH 1/16W 3.9K	1	
R5840	ERJ3GEY0R00	M.RESISTOR CH 1/16W 0	1	
R5841	ERJ3GEYJ101	M.RESISTOR CH 1/16W 100	1	
R5842	ERJ3RBD561	M.RESISTOR CH 1/16W 560	1	
R5843	ERJ3RBD122	M.RESISTOR CH 1/16W 1.2K	1	
R5844	ERJ3RBD242	M.RESISTOR CH 1/16W 2.4K	1	
R5845	ERJ3RBD472	M.RESISTOR CH 1/16W 4.7K	1	

Ref.No.	Part No.	Part Name & Description	Pcs	Remarks
R5846	ERJ3RBD103	M.RESISTOR CH 1/16W 10K	1	
R5847	ERJ3RBD203	M.RESISTOR CH 1/16W 20K	1	
R5848	ERJ3RBD393	M.RESISTOR CH 1/16W 39K	1	
R5849	ERJ3RBD753	M.RESISTOR CH 1/16W 75K	1	
R5850	ERJ3GEYJ271	M.RESISTOR CH 1/16W 270	1	
R5851	ERJ3GEYJ470	M.RESISTOR CH 1/16W 47	1	
R5852	ERJ6GEYG332	M.RESISTOR CH 1/10W 3.3K	1	
R5853-55	ERJ3GEYJ470	M.RESISTOR CH 1/16W 47	3	
R5856,57	ERJ3GEYJ101	M.RESISTOR CH 1/16W 100	2	
R5858-61	ERJ6GEYG471	M.RESISTOR CH 1/10W 470	4	
R5862-65	ERJ3GEYJ470	M.RESISTOR CH 1/16W 47	4	
R5866	ERJ3GEYJ330	M.RESISTOR CH 1/16W 33	1	
R5867	ERJ3GEYG472	M.RESISTOR CH 1/16W 4.7K	1	
R5868	ERJ3GEY0R00	M.RESISTOR CH 1/16W 0	1	
R5894,95	ERJ3GEY0R00	M.RESISTOR CH 1/16W 0	2	
RY5301	ATQ229	RELAY	1	K6B2CDB00006
RY5601	ATQ229	RELAY	1	K6B2CDB00006
SW5300	VSS0367-06B	SWITCH	1	K0D161A00001
SW5600	VSS0367-06B	SWITCH	1	K0D161A00001
TG5001	VJR0646	TEST POINT	1	D0X0R0000022
TG5004,05	VJR0646	TEST POINT	2	D0X0R0000022
TG5008-10	VJR0646	TEST POINT	3	D0X0R0000022
TG5013	VJR0646	TEST POINT	1	D0X0R0000022
TP5001,02	VJR0646	TEST POINT	2	D0X0R0000022
TP5010	EYF6CU	TEST POINT	1	
TP5011,12	VJR0646	TEST POINT	2	D0X0R0000022
TP5014	EYF6CU	TEST POINT	1	
TP5020,21	EYF6CU	TEST POINT	2	
TP5023	EYF6CU	TEST POINT	1	
TP5024,25	VJR0646	TEST POINT	2	D0X0R0000022
TP5030	EYF6CU	TEST POINT	1	
TP5031,32	VJR0646	TEST POINT	2	D0X0R0000022
TP5034	EYF6CU	TEST POINT	1	
TP5040,41	EYF6CU	TEST POINT	2	
TP5043	EYF6CU	TEST POINT	1	
TP5044,45	VJR0646	TEST POINT	2	D0X0R0000022
		MISCELLANEOUS		
	VML2143	CARD PULLER	1	
	VML2144	CARD PULLER	1	
	VSC3626	HEAT SINK	2	
	XNG26EFXS	NUT	2	
	XYN26+F10	SCREW	2	
	VSC4609	SHIELD CASE	2	
	XYN3+F8	SCREW	2	
	VMP6465	HEAT SINK HOLDER ANGLE B	1	
■ E10	VEP85185B	H3 EQ MAIN P.C.BOARD	1	(RTL)
C5001	ECUX1E104ZFV	C.CAPACITOR CH 25V 0.1U	1	
C5002	ECUX1H121JCV	C.CAPACITOR CH 50V 120P	1	
C5003-15	ECUX1E104ZFV	C.CAPACITOR CH 25V 0.1U	13	
C5016	ECUX1H221JCV	C.CAPACITOR CH 50V 220P	1	
C5017	EEVHB1C470	E.CAPACITOR 16V 47U	1	
C5018	EEVHB0J101	E.CAPACITOR 6.3V 100U	1	
C5059	ECUX1E104ZFV	C.CAPACITOR CH 25V 0.1U	1	
C5083-31	ECUX1E104ZFV	C.CAPACITOR CH 25V 0.1U	49	
C5180-87	ECUX1E104ZFV	C.CAPACITOR CH 25V 0.1U	8	
C5190	EEVHB1C100	E.CAPACITOR 16V 10U	1	
C5191	ECUX1E104ZFV	C.CAPACITOR CH 25V 0.1U	1	
C5230,31	ECUX1E104ZFV	C.CAPACITOR CH 25V 0.1U	2	
C5232	ECUX1C104KBV	C.CAPACITOR CH 16V 0.1U	1	
C5233,34	ECUX1E104ZFV	C.CAPACITOR CH 25V 0.1U	2	
C5235	ECUX1H220JCV	C.CAPACITOR CH 50V 22P	1	
C5236,37	ECUX1E104ZFV	C.CAPACITOR CH 25V 0.1U	2	

Ref.No.	Part No.	Part Name & Description	Pcs	Remarks
C5250,51	ECUX1E104ZFV	C.CAPACITOR CH 25V 0.1U	2	
C5252	ECUX1C104KBV	C.CAPACITOR CH 16V 0.1U	1	
C5253,54	ECUX1E104ZFV	C.CAPACITOR CH 25V 0.1U	2	
C5255	ECUX1H220JCV	C.CAPACITOR CH 50V 22P	1	
C5301,02	EEVHB1H2R2	E.CAPACITOR 50V 2.2U	2	
C5303-06	ECUX1E104ZFV	C.CAPACITOR CH 25V 0.1U	4	
C5307-09	ECUX1C104KBV	C.CAPACITOR CH 16V 0.1U	3	
C5310	ECUX1H390JCV	C.CAPACITOR CH 50V 39P	1	
C5312-15	ECUX1E104ZFV	C.CAPACITOR CH 25V 0.1U	4	
C5316	ECUX1H101JCV	C.CAPACITOR CH 50V 100P	1	
C5317,18	ECUX1E104ZFV	C.CAPACITOR CH 25V 0.1U	2	
C5319,20	ECUX1C104KBV	C.CAPACITOR CH 16V 0.1U	2	
C5321	ECUX1H100DCV	C.CAPACITOR CH 50V 10P	1	
C5322,23	ECUX1E104ZFV	C.CAPACITOR CH 25V 0.1U	2	
C5324,25	ECUX1C104KBV	C.CAPACITOR CH 16V 0.1U	2	
C5326,27	ECUX1E104ZFV	C.CAPACITOR CH 25V 0.1U	2	
C5328	ECUX1H680JCV	C.CAPACITOR CH 50V 68P	1	
C5332	ECUX1C104KBV	C.CAPACITOR CH 16V 0.1U	1	
C5333	ECUX1H103KBV	C.CAPACITOR CH 50V 0.01U	1	
C5334	ECUX1C473KBV	C.CAPACITOR CH 16V 0.047U	1	
C5336	ECUX1C683KBV	C.CAPACITOR CH 16V 0.068U	1	
C5337	ECUX1C104KBV	C.CAPACITOR CH 16V 0.1U	1	
C5338	ECUX1H820JCV	C.CAPACITOR CH 50V 82P	1	
C5339	ECUV1H470JCV	C.CAPACITOR CH 50V 47P	1	
C5340	ECUX1H180JCV	C.CAPACITOR CH 50V 18P	1	
C5341	ECUX1H391JCV	C.CAPACITOR CH 50V 390P	1	
C5342	ECUX1H820JCV	C.CAPACITOR CH 50V 82P	1	
C5343	ECUV1H470JCV	C.CAPACITOR CH 50V 47P	1	
C5344	ECUX1C104KBV	C.CAPACITOR CH 16V 0.1U	1	
C5346,47	ECUX1E104ZFV	C.CAPACITOR CH 25V 0.1U	2	
C5348,49	ECUX1C104KBV	C.CAPACITOR CH 16V 0.1U	2	
C5350-53	ECUX1E104ZFV	C.CAPACITOR CH 25V 0.1U	4	
C5354	ECUX1C104KBV	C.CAPACITOR CH 16V 0.1U	1	
C5355	ECUX1H122KBV	C.CAPACITOR CH 50V 1200P	1	
C5356	ECUX1H332KBV	C.CAPACITOR CH 50V 3300P	1	
C5357	ECUX1C104KBV	C.CAPACITOR CH 16V 0.1U	1	
C5359,60	ECUX1E104ZFV	C.CAPACITOR CH 25V 0.1U	2	
C5361,62	ECUX1H222KBV	C.CAPACITOR CH 50V 2200P	2	
C5363-65	ECUX1C104KBV	C.CAPACITOR CH 16V 0.1U	3	
C5366-68	ECUX1E104ZFV	C.CAPACITOR CH 25V 0.1U	3	
C5380-89	ECUX1E104ZFV	C.CAPACITOR CH 25V 0.1U	10	
C5491	ECUX1E104ZFV	C.CAPACITOR CH 25V 0.1U	1	
C5492	ECUM1C224KBN	C.CAPACITOR CH 16V 0.22U	1	
C5493	ECUX1H103KBV	C.CAPACITOR CH 50V 0.01U	1	
C5494-99	ECUX1C104KBV	C.CAPACITOR CH 16V 0.1U	6	
C5500	ECUX1A105KBN	C.CAPACITOR CH 10V 1U	1	
C5501	ECUX1C104KBV	C.CAPACITOR CH 16V 0.1U	1	
C5502	ECUX1A105KBN	C.CAPACITOR CH 10V 1U	1	
C5503,04	ECUX1C104KBV	C.CAPACITOR CH 16V 0.1U	2	
C5506-25	ECUX1E104ZFV	C.CAPACITOR CH 25V 0.1U	20	
C5528,29	ECUX1E104ZFV	C.CAPACITOR CH 25V 0.1U	2	
C5530	ECUX1C104KBV	C.CAPACITOR CH 16V 0.1U	1	
C5531-33	ECUX1E104ZFV	C.CAPACITOR CH 25V 0.1U	3	
C5535-37	ECUX1E104ZFV	C.CAPACITOR CH 25V 0.1U	3	
C5538	ECUX1C333KBV	C.CAPACITOR CH 16V 0.033U	1	
C5540	ECUX1H222KBV	C.CAPACITOR CH 50V 2200P	1	
C5542-50	ECUX1E104ZFV	C.CAPACITOR CH 25V 0.1U	9	
C5551	ECKF1H152KB	C.CAPACITOR 50V 1500P	1	
C5600,01	ECUX1E104ZFV	C.CAPACITOR CH 25V 0.1U	2	
C5602	ECUX1C104KBV	C.CAPACITOR CH 16V 0.1U	1	
C5603	ECUX1H560JCV	C.CAPACITOR CH 50V 56P	1	
C5604	ECUX1H221JCV	C.CAPACITOR CH 50V 220P	1	
C5605	ECUX1H271JCV	C.CAPACITOR CH 50V 270P	1	
C5606	ECUX1H221JCV	C.CAPACITOR CH 50V 220P	1	
C5607	ECUX1H680JCV	C.CAPACITOR CH 50V 68P	1	
C5608	ECUX1H271JCV	C.CAPACITOR CH 50V 270P	1	
C5609	ECUX1C104KBV	C.CAPACITOR CH 16V 0.1U	1	
C5610	ECUX1H820JCV	C.CAPACITOR CH 50V 82P	1	
C5611,12	ECUX1H121JCV	C.CAPACITOR CH 50V 120P	2	
C5613-15	ECUX1C104KBV	C.CAPACITOR CH 16V 0.1U	3	
C5616,17	ECUX1E104ZFV	C.CAPACITOR CH 25V 0.1U	2	
C5618	ECUX1H102JCV	C.CAPACITOR CH 50V 1000P	1	
C5620	ECUX1H562KBV	C.CAPACITOR CH 50V 5600P	1	
C5621,22	ECUX1E104ZFV	C.CAPACITOR CH 25V 0.1U	2	
C5701	EEVHB1C470	E.CAPACITOR 16V 47U	1	

Ref.No.	Part No.	Part Name & Description	Pcs	Remarks
C5702	EEVHB1C100	E.CAPACITOR 16V 10U	1	
C5703,04	EEVHB1C470	E.CAPACITOR 16V 47U	2	
C5705	EEVHB1C100	E.CAPACITOR 16V 10U	1	
C5706,07	EEVHB1C470	E.CAPACITOR 16V 47U	2	
C5708	EEVHB1C100	E.CAPACITOR 16V 10U	1	
C5709	EEVHB1C470	E.CAPACITOR 16V 47U	1	
C5710	EEVHB1C100	E.CAPACITOR 16V 10U	1	
C5711	EEVHB1C470	E.CAPACITOR 16V 47U	1	
C5712	EEVHB0J101	E.CAPACITOR 6.3V 100U	1	
C5713	EEVHB0J470	E.CAPACITOR 6.3V 47U	1	
C5714	EEVHB1C470	E.CAPACITOR 16V 47U	1	
C5715	EEVHB0J101	E.CAPACITOR 6.3V 100U	1	
C5716	EEVHB0J470	E.CAPACITOR 6.3V 47U	1	
C5717	EEVHB1C470	E.CAPACITOR 16V 47U	1	
C5718	EEVHB1C100	E.CAPACITOR 16V 10U	1	
C5721-31	ECUX1E104ZFV	C.CAPACITOR CH 25V 0.1U	11	
D5001	MA3J14300L	DIODE	1	
D5002,03	MA142K	DIODE	2	
D5301	MA142K	DIODE	1	
FL5701-07	VLF0931	FILTER	7	F1Y2A1030001
IC5001-03	TVHC244FT	IC	3	
IC5004	TC4S71F	IC	1	
IC5005	TVHC86FT	IC	1	
IC5006,07	MC10H124M	IC	2	C0JBZZ000020
IC5008	TC4S71F	IC	1	
IC5009-11	TC4S30F	IC	3	C0JBAZ000429
IC5012	M62370GP	IC	1	C0FBBD000082
IC5013-16	THC4053FT	IC	4	
IC5017-19	NJM084V	IC	3	
IC5020-22	TC4S30F	IC	3	C0JBAZ000429
IC5030	MC10H116M	IC	1	C0JBZZ000018
IC5031,32	MC10H102M	IC	2	C0JBZD000001
IC5033,34	MC10H131M	IC	2	
IC5035	MC10H125M	IC	1	
IC5036	TLCX244FT	IC	1	
IC5040	TC4S81F	IC	1	C0JBAA000075
IC5041	TC4S69F	IC	1	C0JBAB000138
IC5042	NJM082BV	IC	1	
IC5050	TC4S81F	IC	1	C0JBAA000075
IC5051	TC4S69F	IC	1	C0JBAB000138
IC5301	MC1495D	IC	1	
IC5302-04	UPC1663G	IC	3	C1CB00000329
IC5305	NJM084V	IC	1	
IC5310	MN673796	IC	1	
IC5311	NJM084V	IC	1	
IC5312	TLCX244FT	IC	1	
IC5313,14	TLCX574FT	IC	2	
IC5315	MC10H124M	IC	1	C0JBZZ000020
IC5317	UPD65946GY00	IC	1	
IC5600	NJM1496V	IC	1	
IC5601	TC4W53FU	IC	1	
IC5701	AN7805F	IC	1	
IC5702	AN7905F	IC	1	
IC5703,04	LT1086CM	IC	2	C0CBAYG00001
L5301	VLQ0163MR27	COIL 0.27UH	1	
L5302	VLQ0163JR47	COIL 0.47UH	1	G1CR47J00004
L5303,04	VLQ0163J101	COIL 100UH	2	
L5305,06	VLQ0163JR22	COIL 0.22UH	2	G1CR22J00002
L5307	VLQ0163J6R8	COIL 6.8UH	1	G1C6R8J00007
L5600,01	VLQ0163J4R7	COIL 4.7UH	2	G1C4R7J00004
L5602,03	VLQ0163JR47	COIL 0.47UH	2	G1CR47J00004
L5701-04	ELESN4R7JA	COIL 4.7UH	4	
P5001	VJP3454B096	CONNECTOR (MALE)	1	K1KA96B00021
P5002	VJP1230R	CONNECTOR (MALE)	1	K1KA03A00198
Q5001	2SA1532	TRANSISTOR	1	
Q5002	2SB1218A	TRANSISTOR	1	
Q5003	2SD1819A-R	TRANSISTOR	1	
Q5230	2SD601A-R	TRANSISTOR	1	
Q5231	2SB709A-R	TRANSISTOR	1	

Ref.No.	Part No.	Part Name & Description	Pcs	Remarks
Q5250	2SD601A-R	TRANSISTOR	1	
Q5251	2SB709A-R	TRANSISTOR	1	
Q5301	XN6537	TRANSISTOR-RESISTOR	1	
Q5302,03	2SC3930	TRANSISTOR	2	
Q5304,05	2SD1979	TRANSISTOR	2	
Q5306	XN5531	TRANSISTOR-RESISTOR	1	
Q5307	2SC3930	TRANSISTOR	1	
Q5308,09	2SD1979	TRANSISTOR	2	
Q5310,11	XN5531	TRANSISTOR-RESISTOR	2	
Q5312,13	2SK508K512	TRANSISTOR	2	
Q5314,15	2SC3930	TRANSISTOR	2	
Q5316,17	2SD1979	TRANSISTOR	2	
Q5318	2SC3930	TRANSISTOR	1	
Q5319	XN6537	TRANSISTOR-RESISTOR	1	
Q5320,21	2SC3930	TRANSISTOR	2	
Q5322	XN5531	TRANSISTOR-RESISTOR	1	
Q5323	2SC3930	TRANSISTOR	1	
Q5324	2SC3130	TRANSISTOR	1	
Q5325	2SC3930	TRANSISTOR	1	
Q5326,27	2SD1979	TRANSISTOR	2	
Q5328-30	2SC3930	TRANSISTOR	3	
Q5350,51	2SA1532	TRANSISTOR	2	
Q5352	2SC3930	TRANSISTOR	1	
Q5353	2SC3130	TRANSISTOR	1	
Q5600	XN5531	TRANSISTOR-RESISTOR	1	
Q5601-05	2SD1979	TRANSISTOR	5	
Q5606	2SC3130	TRANSISTOR	1	
Q5607	2SC3930	TRANSISTOR	1	
QR5001	UN5111	TRANSISTOR-RESISTOR	1	
QR5002,03	UN5211	TRANSISTOR-RESISTOR	2	
QR5081	UN5211	TRANSISTOR-RESISTOR	1	
QR5082	UN5111	TRANSISTOR-RESISTOR	1	
QR5301	UN5211	TRANSISTOR-RESISTOR	1	
R5001-05	ERJ3GEYJ273	M.RESISTOR CH 1/16W 27K	5	
R5006-11	ERJ3GEYJ101	M.RESISTOR CH 1/16W 100	6	
R5012	ERJ3GEYJ470	M.RESISTOR CH 1/16W 47	1	
R5013	ERJ3GEYJ103	M.RESISTOR CH 1/16W 10K	1	
R5014,15	ERJ3GEYJ123	M.RESISTOR CH 1/16W 12K	2	
R5016,17	ERJ3GEYJ103	M.RESISTOR CH 1/16W 10K	2	
R5018	ERJ3GEYJ101	M.RESISTOR CH 1/16W 100	1	
R5019,20	ERJ3GEYJ103	M.RESISTOR CH 1/16W 10K	2	
R5021,22	ERJ3GEYJ101	M.RESISTOR CH 1/16W 100	2	
R5023	ERJ3GEYJ103	M.RESISTOR CH 1/16W 10K	1	
R5024,25	ERJ3GEYG471	M.RESISTOR CH 1/16W 470	2	
R5026,27	ERJ3GEYJ101	M.RESISTOR CH 1/16W 100	2	
R5028	ERJ3RBD153	M.RESISTOR CH 1/16W 15K	1	
R5029	ERJ3GEYJ103	M.RESISTOR CH 1/16W 10K	1	
R5030,31	ERJ3GEYJ101	M.RESISTOR CH 1/16W 100	2	
R5032,33	ERJ3GEYG471	M.RESISTOR CH 1/16W 470	2	
R5035	ERJ3GEYJ101	M.RESISTOR CH 1/16W 100	1	
R5036-38	ERJ3GEYJ103	M.RESISTOR CH 1/16W 10K	3	
R5039-42	ERJ3GEYG471	M.RESISTOR CH 1/16W 470	4	
R5043-46	ERJ3GEYJ101	M.RESISTOR CH 1/16W 100	4	
R5047	ERJ3GEYJ103	M.RESISTOR CH 1/16W 10K	1	
R5048	ERJ3GEYJ683	M.RESISTOR CH 1/16W 68K	1	
R5049	ERJ3GEYJ104	M.RESISTOR CH 1/16W 100K	1	
R5050	ERJ3GEYJ103	M.RESISTOR CH 1/16W 10K	1	
R5051	ERJ3GEYG102	M.RESISTOR CH 1/16W 1K	1	
R5052	ERJ3GEYJ101	M.RESISTOR CH 1/16W 100	1	
R5053	ERJ3GEYJ273	M.RESISTOR CH 1/16W 27K	1	
R5054	ERJ3GEYJ101	M.RESISTOR CH 1/16W 100	1	
R5055,56	ERJ3GEYJ103	M.RESISTOR CH 1/16W 10K	2	
R5057	ERJ3GEYJ101	M.RESISTOR CH 1/16W 100	1	
R5058	ERJ3GEYJ103	M.RESISTOR CH 1/16W 10K	1	
R5059	ERJ3GEYJ101	M.RESISTOR CH 1/16W 100	1	
R5060,61	ERJ3GEYJ273	M.RESISTOR CH 1/16W 27K	2	
R5062	ERJ3GEYJ103	M.RESISTOR CH 1/16W 10K	1	
R5063	ERJ3GEYG472	M.RESISTOR CH 1/16W 4.7K	1	
R5064,65	ERJ3GEYJ273	M.RESISTOR CH 1/16W 27K	2	
R5066	ERJ3GEYJ103	M.RESISTOR CH 1/16W 10K	1	
R5067	ERJ3GEYG472	M.RESISTOR CH 1/16W 4.7K	1	
R5068-76	ERJ3GEYJ101	M.RESISTOR CH 1/16W 100	9	
R5077	ERJ3GEY0R00	M.RESISTOR CH 1/16W 0	1	

Ref.No.	Part No.	Part Name & Description	Pcs	Remarks
R5078	ERJ3GEYJ103	M.RESISTOR CH 1/16W 10K	1	
R5080-82	ERJ3GEYJ103	M.RESISTOR CH 1/16W 10K	3	
R5083-13	ERJ3GEYJ101	M.RESISTOR CH 1/16W 100	31	
R5114,15	ERJ3RBD103	M.RESISTOR CH 1/16W 10K	2	
R5116,17	ERJ3GEYJ101	M.RESISTOR CH 1/16W 100	2	
R5119	ERJ3GEYJ101	M.RESISTOR CH 1/16W 100	1	
R5120,21	ERJ3RBD103	M.RESISTOR CH 1/16W 10K	2	
R5122,23	ERJ3GEYJ101	M.RESISTOR CH 1/16W 100	2	
R5125	ERJ3GEYJ101	M.RESISTOR CH 1/16W 100	1	
R5126,27	ERJ3RBD103	M.RESISTOR CH 1/16W 10K	2	
R5128,29	ERJ3GEYJ101	M.RESISTOR CH 1/16W 100	2	
R5131	ERJ3GEYJ101	M.RESISTOR CH 1/16W 100	1	
R5132,33	ERJ3RBD103	M.RESISTOR CH 1/16W 10K	2	
R5134,35	ERJ3GEYJ101	M.RESISTOR CH 1/16W 100	2	
R5137	ERJ3GEYJ101	M.RESISTOR CH 1/16W 100	1	
R5138,39	ERJ3RBD103	M.RESISTOR CH 1/16W 10K	2	
R5140,41	ERJ3GEYJ101	M.RESISTOR CH 1/16W 100	2	
R5143,44	ERJ3GEYJ101	M.RESISTOR CH 1/16W 100	2	
R5146	ERJ3GEYJ101	M.RESISTOR CH 1/16W 100	1	
R5147,48	ERJ3RBD103	M.RESISTOR CH 1/16W 10K	2	
R5149	ERJ3GEYJ101	M.RESISTOR CH 1/16W 100	1	
R5150	ERJ3GEYJ103	M.RESISTOR CH 1/16W 10K	1	
R5151	ERJ3GEYJ101	M.RESISTOR CH 1/16W 100	1	
R5152,53	ERJ3GEYJ103	M.RESISTOR CH 1/16W 10K	2	
R5154	ERJ3GEYJ101	M.RESISTOR CH 1/16W 100	1	
R5155	ERJ3GEYJ103	M.RESISTOR CH 1/16W 10K	1	
R5156-58	ERJ3GEYJ101	M.RESISTOR CH 1/16W 100	3	
R5180	ERJ3GEYJ101	M.RESISTOR CH 1/16W 100	1	
R5181,82	ERJ3GEYG471	M.RESISTOR CH 1/16W 470	2	
R5185	ERJ3GEYJ221	M.RESISTOR CH 1/16W 220	1	
R5186,87	ERJ3GEYG471	M.RESISTOR CH 1/16W 470	2	
R5188	ERJ3GEYJ101	M.RESISTOR CH 1/16W 100	1	
R5189	ERJ3GEYJ470	M.RESISTOR CH 1/16W 47	1	
R5190-00	ERJ3GEYG471	M.RESISTOR CH 1/16W 470	11	
R5201,02	ERJ3GEYJ101	M.RESISTOR CH 1/16W 100	2	
R5204	ERJ6GEYG121	M.RESISTOR CH 1/10W 120	1	
R5205	ERJ6GEYJ820	M.RESISTOR CH 1/10W 82	1	
R5206	ERJ6GEYG121	M.RESISTOR CH 1/10W 120	1	
R5207	ERJ6GEYJ820	M.RESISTOR CH 1/10W 82	1	
R5208,09	ERJ3GEY0R00	M.RESISTOR CH 1/16W 0	2	
R5210-12	ERJ3GEYJ101	M.RESISTOR CH 1/16W 100	3	
R5213-16	ERJ3GEY0R00	M.RESISTOR CH 1/16W 0	4	
R5217-20	ERJ3GEYJ101	M.RESISTOR CH 1/16W 100	4	
R5221,22	ERJ3GEY0R00	M.RESISTOR CH 1/16W 0	2	
R5223-26	ERJ3GEYJ101	M.RESISTOR CH 1/16W 100	4	
R5230	ERJ3GEYJ103	M.RESISTOR CH 1/16W 10K	1	
R5231	ERJ3GEYJ563	M.RESISTOR CH 1/16W 56K	1	
R5232	ERJ3GEYJ154	M.RESISTOR CH 1/16W 150K	1	
R5233	ERJ3GEYJ103	M.RESISTOR CH 1/16W 10K	1	
R5234	ERJ3GEYJ222	M.RESISTOR CH 1/16W 2.2K	1	
R5235	ERJ3GEYJ392	M.RESISTOR CH 1/16W 3.9K	1	
R5236	ERJ3GEYJ103	M.RESISTOR CH 1/16W 10K	1	
R5237	ERJ3RBD103	M.RESISTOR CH 1/16W 10K	1	
R5238	ERJ3RBD123	M.RESISTOR CH 1/16W 12K	1	
R5239	ERJ3GEYG472	M.RESISTOR CH 1/16W 4.7K	1	
R5240	ERJ3GEYJ103	M.RESISTOR CH 1/16W 10K	1	
R5250	ERJ3GEYJ103	M.RESISTOR CH 1/16W 10K	1	
R5251	ERJ3GEYJ563	M.RESISTOR CH 1/16W 56K	1	
R5252	ERJ3GEYJ154	M.RESISTOR CH 1/16W 150K	1	
R5253	ERJ3GEYJ103	M.RESISTOR CH 1/16W 10K	1	
R5254	ERJ3GEYJ222	M.RESISTOR CH 1/16W 2.2K	1	
R5255	ERJ3GEYJ392	M.RESISTOR CH 1/16W 3.9K	1	
R5256	ERJ3GEYJ103	M.RESISTOR CH 1/16W 10K	1	
R5257	ERJ3RBD103	M.RESISTOR CH 1/16W 10K	1	
R5258	ERJ3RBD123	M.RESISTOR CH 1/16W 12K	1	
R5259	ERJ3GEYG472	M.RESISTOR CH 1/16W 4.7K	1	
R5301-04	ERJ3GEYJ470	M.RESISTOR CH 1/16W 47	4	
R5305	ERJ3RBD271	M.RESISTOR CH 1/16W 270	1	
R5306	ERJ3RBD181	M.RESISTOR CH 1/16W 180	1	
R5307,08	ERJ3GEYJ103	M.RESISTOR CH 1/16W 10K	2	
R5309,10	ERJ3GEYJ330	M.RESISTOR CH 1/16W 33	2	
R5311	ERJ3RBD682	M.RESISTOR CH 1/16W 6.8K	1	
R5312	ERJ3RBD822	M.RESISTOR CH 1/16W 8.2K	1	
R5313,14	ERJ3RBD561	M.RESISTOR CH 1/16W 560	2	
R5315	ERJ3RBD151	M.RESISTOR CH 1/16W 150	1	

Ref.No.	Part No.	Part Name & Description	Pcs	Remarks
R5316,17	ERJ3RBD561	M.RESISTOR CH 1/16W 560	2	
R5318,19	ERJ3GEYJ470	M.RESISTOR CH 1/16W 47	2	
R5320,21	ERJ3GEYJ330	M.RESISTOR CH 1/16W 33	2	
R5322	ERJ3GEYJ470	M.RESISTOR CH 1/16W 47	1	
R5323	ERJ3GEYJ122	M.RESISTOR CH 1/16W 1.2K	1	
R5324	ERJ3GEYG472	M.RESISTOR CH 1/16W 4.7K	1	
R5325	ERJ3GEYJ470	M.RESISTOR CH 1/16W 47	1	
R5326,27	ERJ3GEYJ272	M.RESISTOR CH 1/16W 2.7K	2	
R5328,29	ERJ3GEYJ470	M.RESISTOR CH 1/16W 47	2	
R5330,31	ERJ3GEYG152	M.RESISTOR CH 1/16W 1.5K	2	
R5332,33	ERJ3GEYJ103	M.RESISTOR CH 1/16W 10K	2	
R5334	ERJ3GEYJ101	M.RESISTOR CH 1/16W 100	1	
R5335,36	ERJ3GEYJ470	M.RESISTOR CH 1/16W 47	2	
R5337,38	ERJ3GEYJ330	M.RESISTOR CH 1/16W 33	2	
R5339,40	ERJ3GEYG472	M.RESISTOR CH 1/16W 4.7K	2	
R5341,42	ERJ3GEYJ470	M.RESISTOR CH 1/16W 47	2	
R5343	ERJ3GEYG332	M.RESISTOR CH 1/16W 3.3K	1	
R5344	ERJ3RBD151	M.RESISTOR CH 1/16W 150	1	
R5345	ERJ3GEYJ470	M.RESISTOR CH 1/16W 47	1	
R5346	ERJ3RBD272	M.RESISTOR CH 1/16W 2.7K	1	
R5347	ERJ3GEYG332	M.RESISTOR CH 1/16W 3.3K	1	
R5348	ERJ3GEY0R00	M.RESISTOR CH 1/16W 0	1	
R5349	ERJ3GEYJ181	M.RESISTOR CH 1/16W 180	1	
R5350	ERJ3RED680	M.RESISTOR CH 1/16W 68	1	
R5351,52	ERJ3RBD151	M.RESISTOR CH 1/16W 150	2	
R5353,54	ERJ3GEYG102	M.RESISTOR CH 1/16W 1K	2	
R5355,56	ERJ3GEYJ470	M.RESISTOR CH 1/16W 47	2	
R5358,59	ERJ3GEYG152	M.RESISTOR CH 1/16W 1.5K	2	
R5360,61	ERJ3GEYG102	M.RESISTOR CH 1/16W 1K	2	
R5362,63	ERJ3GEYJ470	M.RESISTOR CH 1/16W 47	2	
R5364,65	ERJ3GEYJ330	M.RESISTOR CH 1/16W 33	2	
R5366,67	ERJ3GEYJ681	M.RESISTOR CH 1/16W 680	2	
R5368	ERJ3RBD121	M.RESISTOR CH 1/16W 120	1	
R5369	ERJ3RBD333	M.RESISTOR CH 1/16W 33K	1	
R5370	ERJ3RBD271	M.RESISTOR CH 1/16W 270	1	
R5371	ERJ3RBD121	M.RESISTOR CH 1/16W 120	1	
R5372	ERJ3RBD333	M.RESISTOR CH 1/16W 33K	1	
R5373,74	ERJ3GEYG152	M.RESISTOR CH 1/16W 1.5K	2	
R5375	ERJ3GEYJ470	M.RESISTOR CH 1/16W 47	1	
R5376	ERJ3GEYJ821	M.RESISTOR CH 1/16W 820	1	
R5377-79	ERJ3GEYJ470	M.RESISTOR CH 1/16W 47	3	
R5380	ERJ3GEYJ182	M.RESISTOR CH 1/16W 1.8K	1	
R5381	ERJ3GEYJ470	M.RESISTOR CH 1/16W 47	1	
R5382,83	ERJ3GEYJ103	M.RESISTOR CH 1/16W 10K	2	
R5384,85	ERJ3GEYJ470	M.RESISTOR CH 1/16W 47	2	
R5386	ERJ3GEYG472	M.RESISTOR CH 1/16W 4.7K	1	
R5387,88	ERJ3GEYG102	M.RESISTOR CH 1/16W 1K	2	
R5389,90	ERJ3GEYJ470	M.RESISTOR CH 1/16W 47	2	
R5392,93	ERJ3GEYG152	M.RESISTOR CH 1/16W 1.5K	2	
R5394,95	ERJ3GEYG102	M.RESISTOR CH 1/16W 1K	2	
R5396,97	ERJ3GEYJ470	M.RESISTOR CH 1/16W 47	2	
R5398	ERJ3RBD271	M.RESISTOR CH 1/16W 270	1	
R5399,00	ERJ3GEYJ330	M.RESISTOR CH 1/16W 33	2	
R5401	ERJ3RBD682	M.RESISTOR CH 1/16W 6.8K	1	
R5402	ERJ3RBD822	M.RESISTOR CH 1/16W 8.2K	1	
R5403,04	ERJ3RBD561	M.RESISTOR CH 1/16W 560	2	
R5405	ERJ3RBD151	M.RESISTOR CH 1/16W 150	1	
R5406,07	ERJ3RBD561	M.RESISTOR CH 1/16W 560	2	
R5408,09	ERJ3GEYJ470	M.RESISTOR CH 1/16W 47	2	
R5410,11	ERJ3GEYJ330	M.RESISTOR CH 1/16W 33	2	
R5412,13	ERJ3GEYG472	M.RESISTOR CH 1/16W 4.7K	2	
R5414-16	ERJ3GEYJ470	M.RESISTOR CH 1/16W 47	3	
R5417	ERJ6GEYG391	M.RESISTOR CH 1/10W 390	1	
R5418-20	ERJ3GEYJ470	M.RESISTOR CH 1/16W 47	3	
R5421	ERJ3GEYG102	M.RESISTOR CH 1/16W 1K	1	
R5422	ERJ3GEYJ101	M.RESISTOR CH 1/16W 100	1	
R5423	ERJ3GEYJ470	M.RESISTOR CH 1/16W 47	1	
R5424	ERJ3GEYG472	M.RESISTOR CH 1/16W 4.7K	1	
R5425,26	ERJ3GEYG102	M.RESISTOR CH 1/16W 1K	2	
R5427,28	ERJ3GEYJ470	M.RESISTOR CH 1/16W 47	2	
R5430	ERJ3RBD681	M.RESISTOR CH 1/16W 680	1	
R5432,33	ERJ3GEYJ103	M.RESISTOR CH 1/16W 10K	2	
R5434-36	ERJ3GEYG102	M.RESISTOR CH 1/16W 1K	3	
R5437	ERJ3GEYJ470	M.RESISTOR CH 1/16W 47	1	
R5438	ERJ3GEY0R00	M.RESISTOR CH 1/16W 0	1	

Ref.No.	Part No.	Part Name & Description	Pcs	Remarks
R5439	ERJ3GEYJ392	M.RESISTOR CH 1/16W 3.9K	1	
R5440	ERJ3GEY0R00	M.RESISTOR CH 1/16W 0	1	
R5441	ERJ3GEYJ470	M.RESISTOR CH 1/16W 47	1	
R5442	ERJ6GEYG391	M.RESISTOR CH 1/10W 390	1	
R5443	ERJ3GEYG472	M.RESISTOR CH 1/16W 4.7K	1	
R5444	ERJ3GEYJ470	M.RESISTOR CH 1/16W 47	1	
R5445	ERJ6GEYG681	M.RESISTOR CH 1/10W 680	1	
R5446	ERJ3GEYJ750	M.RESISTOR CH 1/16W 75	1	
R5447	ERJ3GEYJ101	M.RESISTOR CH 1/16W 100	1	
R5491	ERJ3GEYJ103	M.RESISTOR CH 1/16W 10K	1	
R5492	ERJ3GEY0R00	M.RESISTOR CH 1/16W 0	1	
R5495	ERJ3GEYJ681	M.RESISTOR CH 1/16W 680	1	
R5496	ERJ3GEYG102	M.RESISTOR CH 1/16W 1K	1	
R5497,98	ERJ3RBD102	M.RESISTOR CH 1/16W 1K	2	
R5499	ERJ3GEYJ681	M.RESISTOR CH 1/16W 680	1	
R5500	ERJ3GEYJ331	M.RESISTOR CH 1/16W 330	1	
R5501	ERJ3GEYG472	M.RESISTOR CH 1/16W 4.7K	1	
R5502	ERJ3GEYJ681	M.RESISTOR CH 1/16W 680	1	
R5503	ERJ3GEY0R00	M.RESISTOR CH 1/16W 0	1	
R5507	ERJ3GEYJ470	M.RESISTOR CH 1/16W 47	1	
R5508	ERJ3RED680	M.RESISTOR CH 1/16W 68	1	
R5509	ERJ3GEYJ470	M.RESISTOR CH 1/16W 47	1	
R5510,11	ERJ3GEYJ391	M.RESISTOR CH 1/16W 390	2	
R5512	ERJ3RBD821	M.RESISTOR CH 1/16W 820	1	
R5513	ERJ3RBD471	M.RESISTOR CH 1/16W 470	1	
R5514	ERJ3GEY0R00	M.RESISTOR CH 1/16W 0	1	
R5515	ERJ3GEYJ222	M.RESISTOR CH 1/16W 2.2K	1	
R5516	ERJ3GEYJ681	M.RESISTOR CH 1/16W 680	1	
R5517	ERJ3GEY0R00	M.RESISTOR CH 1/16W 0	1	
R5521	ERJ3GEYJ101	M.RESISTOR CH 1/16W 100	1	
R5524	ERJ3GEY0R00	M.RESISTOR CH 1/16W 0	1	
R5525,26	ERJ3GEYJ101	M.RESISTOR CH 1/16W 100	2	
R5527	ERJ3GEYJ103	M.RESISTOR CH 1/16W 10K	1	
R5528	ERJ3GEY0R00	M.RESISTOR CH 1/16W 0	1	
R5529	ERJ3GEYJ101	M.RESISTOR CH 1/16W 100	1	
R5530	ERJ3RBD561	M.RESISTOR CH 1/16W 560	1	
R5531	ERJ3RBD122	M.RESISTOR CH 1/16W 1.2K	1	
R5532	ERJ3RBD242	M.RESISTOR CH 1/16W 2.4K	1	
R5533	ERJ3RBD472	M.RESISTOR CH 1/16W 4.7K	1	
R5534	ERJ3RBD103	M.RESISTOR CH 1/16W 10K	1	
R5535	ERJ3RBD203	M.RESISTOR CH 1/16W 20K	1	
R5536	ERJ3RBD393	M.RESISTOR CH 1/16W 39K	1	
R5537	ERJ3RBD753	M.RESISTOR CH 1/16W 75K	1	
R5538	ERJ3GEYJ470	M.RESISTOR CH 1/16W 47	1	
R5539	ERJ3GEYJ392	M.RESISTOR CH 1/16W 3.9K	1	
R5540	ERJ3GEY0R00	M.RESISTOR CH 1/16W 0	1	
R5541	ERJ3GEYJ101	M.RESISTOR CH 1/16W 100	1	
R5542	ERJ3RBD561	M.RESISTOR CH 1/16W 560	1	
R5543	ERJ3RBD122	M.RESISTOR CH 1/16W 1.2K	1	
R5544	ERJ3RBD242	M.RESISTOR CH 1/16W 2.4K	1	
R5545	ERJ3RBD472	M.RESISTOR CH 1/16W 4.7K	1	
R5546	ERJ3RBD103	M.RESISTOR CH 1/16W 10K	1	
R5547	ERJ3RBD203	M.RESISTOR CH 1/16W 20K	1	
R5548	ERJ3RBD393	M.RESISTOR CH 1/16W 39K	1	
R5549	ERJ3RBD753	M.RESISTOR CH 1/16W 75K	1	
R5550	ERJ3GEYJ271	M.RESISTOR CH 1/16W 270	1	
R5551	ERJ3GEYJ470	M.RESISTOR CH 1/16W 47	1	
R5552	ERJ6GEYF561	M.RESISTOR CH 1/10W 560	1	
R5553-55	ERJ3GEYJ470	M.RESISTOR CH 1/16W 47	3	
R5556,57	ERJ3GEYJ101	M.RESISTOR CH 1/16W 100	2	
R5558-61	ERJ3GEYG471	M.RESISTOR CH 1/16W 470	4	
R5562-65	ERJ3GEYJ470	M.RESISTOR CH 1/16W 47	4	
R5566	ERJ3GEYJ330	M.RESISTOR CH 1/16W 33	1	
R5567	ERJ3GEYG472	M.RESISTOR CH 1/16W 4.7K	1	
R5568	ERJ3GEY0R00	M.RESISTOR CH 1/16W 0	1	
R5571	ERJ3GEYJ103	M.RESISTOR CH 1/16W 10K	1	
R5573-81	ERJ3GEY0R00	M.RESISTOR CH 1/16W 0	9	
R5582	ERJ3GEYJ470	M.RESISTOR CH 1/16W 47	1	
R5583	ERJ3GEYJ101	M.RESISTOR CH 1/16W 100	1	
R5584-02	ERJ3GEY0R00	M.RESISTOR CH 1/16W 0	19	
R5605,06	ERJ3GEY0R00	M.RESISTOR CH 1/16W 0	2	
R5607	ERJ3GEYJ103	M.RESISTOR CH 1/16W 10K	1	
R5610,11	ERJ3GEYJ470	M.RESISTOR CH 1/16W 47	2	
R5612,13	ERJ3GEYJ330	M.RESISTOR CH 1/16W 33	2	
R5614,15	ERJ3GEYG102	M.RESISTOR CH 1/16W 1K	2	

Ref.No.	Part No.	Part Name & Description	Pcs	Remarks
R5616	ERJ3RED470	M.RESISTOR CH 1/16W 47	1	
R5617,18	ERJ3GEYG102	M.RESISTOR CH 1/16W 1K	2	
R5619	ERJ3RED470	M.RESISTOR CH 1/16W 47	1	
R5620-23	ERJ3GEYJ103	M.RESISTOR CH 1/16W 10K	4	
R5624	ERJ3RED470	M.RESISTOR CH 1/16W 47	1	
R5625	ERJ3GEYG102	M.RESISTOR CH 1/16W 1K	1	
R5626	ERJ3RED470	M.RESISTOR CH 1/16W 47	1	
R5627	ERJ3GEYJ103	M.RESISTOR CH 1/16W 10K	1	
R5628	ERJ3GEYG102	M.RESISTOR CH 1/16W 1K	1	
R5629	ERJ3GEYJ470	M.RESISTOR CH 1/16W 47	1	
R5630	ERJ3RBD271	M.RESISTOR CH 1/16W 270	1	
R5631	ERJ3GEYJ470	M.RESISTOR CH 1/16W 47	1	
R5632	ERJ3GEYG682	M.RESISTOR CH 1/16W 6.8K	1	
R5633,34	ERJ3GEYG102	M.RESISTOR CH 1/16W 1K	2	
R5635,36	ERJ3GEYJ560	M.RESISTOR CH 1/16W 56	2	
R5637,38	ERJ3GEYG102	M.RESISTOR CH 1/16W 1K	2	
R5639	ERJ3RBD821	M.RESISTOR CH 1/16W 820	1	
R5640	ERJ3RBD102	M.RESISTOR CH 1/16W 1K	1	
R5641,42	ERJ3GEYJ560	M.RESISTOR CH 1/16W 56	2	
R5643	ERJ3GEYG822	M.RESISTOR CH 1/16W 8.2K	1	
R5644	ERJ3RBD681	M.RESISTOR CH 1/16W 680	1	
R5645	ERJ3RBD332	M.RESISTOR CH 1/16W 3.3K	1	
R5646	ERJ3RBD272	M.RESISTOR CH 1/16W 2.7K	1	
R5647	ERJ3RBD392	M.RESISTOR CH 1/16W 3.9K	1	
R5648	ERJ3RBD822	M.RESISTOR CH 1/16W 8.2K	1	
R5649	ERJ3GEYJ103	M.RESISTOR CH 1/16W 10K	1	
R5650	ERJ3GEYJ470	M.RESISTOR CH 1/16W 47	1	
R5651-53	ERJ3GEYJ101	M.RESISTOR CH 1/16W 100	3	
R5655	ERJ3GEYJ101	M.RESISTOR CH 1/16W 100	1	
R5701-06	ERJ3GEY0R00	M.RESISTOR CH 1/16W 0	6	
R5709,10	ERJ3GEY0R00	M.RESISTOR CH 1/16W 0	2	
R5711	ERJ3GEYJ103	M.RESISTOR CH 1/16W 10K	1	
R5712-28	ERJ3GEY0R00	M.RESISTOR CH 1/16W 0	17	
R5730,31	ERJ3GEY0R00	M.RESISTOR CH 1/16W 0	2	
R5740	ERJ3RBD121	M.RESISTOR CH 1/16W 120	1	
R5741	ERJ3RBD151	M.RESISTOR CH 1/16W 150	1	
R5742	ERJ3RBD121	M.RESISTOR CH 1/16W 120	1	
R5743	ERJ3RBD151	M.RESISTOR CH 1/16W 150	1	
RY5001,02	ATQ229	RELAY	2	K6B2CDB00006
RY5301	ATQ229	RELAY	1	K6B2CDB00006
SW5001	VSS0367-04B	SWITCH	1	
SW5002	VSS0367-06B	SWITCH	1	K0D161A00001
SW5003	VSS0367-08B	SWITCH	1	
TG5001,02	VJR0646	TEST POINT	2	D0X0R0000022
TG5004,05	VJR0646	TEST POINT	2	D0X0R0000022
TG5008	VJR0646	TEST POINT	1	D0X0R0000022
TP5001	VJR0646	TEST POINT	1	D0X0R0000022
TP5002-07	EYF6CU	TEST POINT	6	
TP5010	EYF6CU	TEST POINT	1	
TP5011-13	VJR0646	TEST POINT	3	D0X0R0000022
TP5020,21	EYF6CU	TEST POINT	2	
TP5023	EYF6CU	TEST POINT	1	
TP5024,25	VJR0646	TEST POINT	2	D0X0R0000022
TP5026	EYF6CU	TEST POINT	1	
		MISCELLANEOUS		
	VML2143	CARD PULLER	1	
	VML2144	CARD PULLER	1	
	VSC3626	HEAT SINK	2	
	XNG26EFXS	NUT	2	
	XYN26+F10	SCREW	2	
	VSC4609	SHIELD CASE	1	
	XYN3+F8	SCREW	2	
	VMP6464	HEAT SINK HOLDER ANGLE A	1	
■ E11	VEP84366A	H5 A MONI MIC P.C.BOARD	1	(RTL)

Ref.No.	Part No.	Part Name & Description	Pcs	Remarks
C1,C2	ECUM1E104ZFN	C.CAPACITOR CH 25V 0.1U	2	
C3	EEVHB1C220	E.CAPACITOR 16V 22U	1	
C4	ECUM1C474KBM	C.CAPACITOR CH 16V 0.47U	1	
C5,C6	ECUM1H472KBN	C.CAPACITOR CH 50V 4700P	2	
C7	ECHU1H223JB	P.CAPACITOR 50V 0.022U	1	
C8	EEVHB1C220	E.CAPACITOR 16V 22U	1	
C9	ECUM1C474KBM	C.CAPACITOR CH 16V 0.47U	1	
C10	ECUM1H103KBN	C.CAPACITOR CH 50V 0.01U	1	
C11	EEVHB1C220	E.CAPACITOR 16V 22U	1	
C12	VCF2GAB682J	C.CAPACITOR 400V 6800P	1	F0A2G6820001
C13	ECUM1C474KBM	C.CAPACITOR CH 16V 0.47U	1	
C14,15	ECUM1E104ZFN	C.CAPACITOR CH 25V 0.1U	2	
C16	ECUM1H103KBN	C.CAPACITOR CH 50V 0.01U	1	
C17	EEVHB1C220	E.CAPACITOR 16V 22U	1	
C18	VCF2GAB682J	C.CAPACITOR 400V 6800P	1	F0A2G6820001
C19	ECUM1H151JCN	C.CAPACITOR CH 50V 150P	1	
C20	EEVHB0J470	E.CAPACITOR 6.3V 47U	1	
C21	ECUM1H390JCN	C.CAPACITOR CH 50V 39P	1	
C22	ECUM1E473KBN	C.CAPACITOR CH 25V 0.047U	1	
C23	EEVHB1C220	E.CAPACITOR 16V 22U	1	
C24	ECUM1H390JCN	C.CAPACITOR CH 50V 39P	1	
C25	EEVHB1C220	E.CAPACITOR 16V 22U	1	
C26,27	ECUM1C394KBM	C.CAPACITOR CH 16V 0.39U	2	
C28,29	ECUM1H103KBN	C.CAPACITOR CH 50V 0.01U	2	
C30	ECUX1C105KBM	C.CAPACITOR CH 16V 1U	1	
C31	ECUM1H104KBM	C.CAPACITOR CH 50V 0.1U	1	
C32	ECUX1H333KBN	C.CAPACITOR CH 50V 0.033U	1	
C33-36	ECUM1H103KBN	C.CAPACITOR CH 50V 0.01U	4	
C37	ECUM1H222KBN	C.CAPACITOR CH 50V 2200P	1	
C38	ECUM1H102KBN	C.CAPACITOR CH 50V 1000P	1	
C39	ECUX1C105KBM	C.CAPACITOR CH 16V 1U	1	
C40	ECUM1H103KBN	C.CAPACITOR CH 50V 0.01U	1	
C41	ECUX1C105KBM	C.CAPACITOR CH 16V 1U	1	
C42	ECUM1H103KBN	C.CAPACITOR CH 50V 0.01U	1	
C52,53	ECUM1E104ZFN	C.CAPACITOR CH 25V 0.1U	2	
C54	ECUM1H330JCN	C.CAPACITOR CH 50V 33P	1	
C55	ECUM1H820JCN	C.CAPACITOR CH 50V 82P	1	
C56-58	ECUM1E104ZFN	C.CAPACITOR CH 25V 0.1U	3	
C60	EEVHP1C100	E.CAPACITOR 16V 10U	1	EEVHP1C100R
C63,64	ECUM1H103KBN	C.CAPACITOR CH 50V 0.01U	2	
C65	ECUM1H561JCN	C.CAPACITOR CH 50V 560P	1	
C66	ECUM1H330JCN	C.CAPACITOR CH 50V 33P	1	
C67	ECUM1H182KBN	C.CAPACITOR CH 50V 1800P	1	
C68	ECUM1H101JCN	C.CAPACITOR CH 50V 100P	1	
C69	EEVHB1C220	E.CAPACITOR 16V 22U	1	
C70	ECUM1E104ZFN	C.CAPACITOR CH 25V 0.1U	1	
C71	EEVHB0J470	E.CAPACITOR 6.3V 47U	1	
C72	ECUM1E104ZFN	C.CAPACITOR CH 25V 0.1U	1	
C73	EEVHB0J470	E.CAPACITOR 6.3V 47U	1	
C74,75	ECUM1H330JCN	C.CAPACITOR CH 50V 33P	2	
C76,77	EEVHB1C220	E.CAPACITOR 16V 22U	2	
C78-81	ECUM1E104ZFN	C.CAPACITOR CH 25V 0.1U	4	
C82,83	EEVHB1C470	E.CAPACITOR 16V 47U	2	
C84,85	EEVHB1C220	E.CAPACITOR 16V 22U	2	
C86-89	ECUM1E104ZFN	C.CAPACITOR CH 25V 0.1U	4	
C90,91	EEVHB1C470	E.CAPACITOR 16V 47U	2	
C101	ECUM1H222KBN	C.CAPACITOR CH 50V 2200P	1	
C102	EEVHB0J470	E.CAPACITOR 6.3V 47U	1	
C103	ECUM1H152KBN	C.CAPACITOR CH 50V 1500P	1	
C104	ECUM1E104ZFN	C.CAPACITOR CH 25V 0.1U	1	
C105	EEVHB1C220	E.CAPACITOR 16V 22U	1	
C106-08	ECUM1E104ZFN	C.CAPACITOR CH 25V 0.1U	3	
C109,10	EEVHB1C220	E.CAPACITOR 16V 22U	2	
C111,12	ECUM1E104ZFN	C.CAPACITOR CH 25V 0.1U	2	
C113	EEVHB1C220	E.CAPACITOR 16V 22U	1	
C114,15	ECUM1H103KBN	C.CAPACITOR CH 50V 0.01U	2	
C116-19	ECUX1C105KBM	C.CAPACITOR CH 16V 1U	4	
C120-23	ECUM1H151JCN	C.CAPACITOR CH 50V 150P	4	
C124,25	EEVHB1C220	E.CAPACITOR 16V 22U	2	
C126,27	ECUM1H221JCN	C.CAPACITOR CH 50V 220P	2	
C128,29	ECHU1C472G	P.CAPACITOR 16V 4700P	2	
C130,31	ECUX1C105KBM	C.CAPACITOR CH 16V 1U	2	
C132-35	ECUM1H103KBN	C.CAPACITOR CH 50V 0.01U	4	

Ref.No.	Part No.	Part Name & Description	Pcs	Remarks
C138,39	EEVHB1C220	E.CAPACITOR 16V 22U	2	
C140-43	ECUM1H103KBN	C.CAPACITOR CH 50V 0.01U	4	
C144,45	ECUM1H820JCN	C.CAPACITOR CH 50V 82P	2	
C148,49	EEVHP1C100	E.CAPACITOR 16V 10U	2	EEVHP1C100R
C150-55	ECUM1E104ZFN	C.CAPACITOR CH 25V 0.1U	6	
C156,57	EEVHB1C470	E.CAPACITOR 16V 47U	2	
C158-61	ECUM1E104ZFN	C.CAPACITOR CH 25V 0.1U	4	
C162,63	EEVHB1C470	E.CAPACITOR 16V 47U	2	
C164-67	ECUM1E104ZFN	C.CAPACITOR CH 25V 0.1U	4	
C168,69	EEVHB1C220	E.CAPACITOR 16V 22U	2	
C170,71	ECUM1E104ZFN	C.CAPACITOR CH 25V 0.1U	2	
C172,73	ECUM1H151JCN	C.CAPACITOR CH 50V 150P	2	
C174,75	EEVHB0G101	E.CAPACITOR 4V 100U	2	EEVHB0G101R
C176,77	ECUM1H103KBN	C.CAPACITOR CH 50V 0.01U	2	
C201-04	ECUM1E104ZFN	C.CAPACITOR CH 25V 0.1U	4	
C205-08	ECUM1H103KBN	C.CAPACITOR CH 50V 0.01U	4	
C209-12	ECUM1H470JCN	C.CAPACITOR CH 50V 47P	4	
C213-16	ECUM1H103KBN	C.CAPACITOR CH 50V 0.01U	4	
C217,18	ECUM1H270JCN	C.CAPACITOR CH 50V 27P	2	
C219-26	EEVHB1C220	E.CAPACITOR 16V 22U	8	
C227,28	ECA1CHG471	C.CAPACITOR 16V 470U	2	
C229	EEVHB1C220	E.CAPACITOR 16V 22U	1	
C230,31	ECA1CHG471	C.CAPACITOR 16V 470U	2	
C232-34	EEVHB1C220	E.CAPACITOR 16V 22U	3	
C235,36	ECUM1H103KBN	C.CAPACITOR CH 50V 0.01U	2	
C237,38	EEVHB1C220	E.CAPACITOR 16V 22U	2	
C239,40	ECUM1H103KBN	C.CAPACITOR CH 50V 0.01U	2	
C241,42	EEVHB1C220	E.CAPACITOR 16V 22U	2	
C243-46	ECUM1H103KBN	C.CAPACITOR CH 50V 0.01U	4	
C304-09	ECUM1E104ZFN	C.CAPACITOR CH 25V 0.1U	6	
C310	ECUM1H103KBN	C.CAPACITOR CH 50V 0.01U	1	
C311	ECUM1E104ZFN	C.CAPACITOR CH 25V 0.1U	1	
C312,13	ECUM1H103KBN	C.CAPACITOR CH 50V 0.01U	2	
C314	ECUM1E104ZFN	C.CAPACITOR CH 25V 0.1U	1	
C315	ECUM1C474KBN	C.CAPACITOR CH 16V 0.47U	1	
C316	ECUV1H822KBN	C.CAPACITOR CH 50V 8200U	1	F1J1H8220004
C317	EEVHB1C220	E.CAPACITOR 16V 22U	1	
C318	ECUM1E104ZFN	C.CAPACITOR CH 25V 0.1U	1	
C341,42	EEVHB1C470	E.CAPACITOR 16V 47U	2	
C343	ECUM1E104ZFN	C.CAPACITOR CH 25V 0.1U	1	
C344-47	ECUM1H103KBN	C.CAPACITOR CH 50V 0.01U	4	
C348	ECUM1E104ZFN	C.CAPACITOR CH 25V 0.1U	1	
C349	ECUM1H103KBN	C.CAPACITOR CH 50V 0.01U	1	
C350,51	ECUM1E104ZFN	C.CAPACITOR CH 25V 0.1U	2	
C352	EEVHB1C220	E.CAPACITOR 16V 22U	1	
C354,55	EEVHB1C470	E.CAPACITOR 16V 47U	2	
D1,D2	MA152A	DIODE	2	
D51,52	MA716	DIODE	2	
D101	MA157	DIODE	1	
D102,03	MA716	DIODE	2	
D201-04	MA157A	DIODE	4	
D301	MA157A	DIODE	1	
D341	MA157A	DIODE	1	
D342,43	MA152WK	DIODE	2	
IC1	AN78N09	IC	1	
IC2,C3	NJM4558M	IC	2	
IC4	THC4053FT	IC	1	
IC5	NJM4558M	IC	1	
IC51	AD7945BR	IC	1	
IC52,53	NJM4580ED	IC	2	C0ABBB000123
IC54	THC4052FT	IC	1	
IC55	NJM4580ED	IC	1	C0ABBB000123
IC56	NJM2100MD	IC	1	
IC57	NJM78L09UA	IC	1	C0CBAHC00002
IC58	NJM79L09UA	IC	1	C0CABBF00001
IC59	NJM78L05UA	IC	1	C0CBADC00010
IC60	NJM79L05UA	IC	1	
IC101	AK4503VF	IC	1	
IC102	XC62AP3002P	IC	1	
IC103	NJM4580ED	IC	1	C0ABBB000123
IC104,05	THC4053FT	IC	2	
IC106-09	NJM4580ED	IC	4	C0ABBB000123
IC110,11	AD7945BR	IC	2	

Ref.No.	Part No.	Part Name & Description	Pcs	Remarks
IC112	NJM78L09UA	IC	1	C0CBAHC00002
IC113	NJM79L09UA	IC	1	C0CABBF00001
IC114	NJM78L09UA	IC	1	C0CBAHC00002
IC115	NJM79L09UA	IC	1	C0CABBF00001
IC116	NJM4556AM	IC	1	
IC201,02	NJM4580ED	IC	2	C0ABBB000123
IC203,04	THC4052FT	IC	2	
IC205,06	NJM2043MD	IC	2	
IC207-10	AQV212SX	IC	4	
IC301-03	TVHC244FT	IC	3	
IC304	TC7SET08F	IC	1	
IC305,06	TVHC153FT	IC	2	
IC307	TC7SU04F	IC	1	
IC308	C1BB00000539	IC	1	
IC341,42	SN74S1051NS	IC	2	
IC343	TC7S04F	IC	1	C0JBAB000169
IC344	74F245SJ	IC	1	C0JBCZ000183
IC345	74F541SJ	IC	1	C0JBCZ000190
IC346	74AC139SJ	IC	1	
IC347,48	UPD71055GB	IC	2	
L101	VLQ0576	COIL	1	
L301,02	VLP0147	COIL	2	
L341	VLF1151A132	COIL	1	
P1	VJP3454B096	CONNECTOR (MALE)	1	K1KA96B00021
P2	VJP1233T	CONNECTOR (MALE) 6P	1	
P3	VJP1230T	CONNECTOR (MALE) 3P	1	
Q1	2SB710A-R	TRANSISTOR	1	
Q2	2SD602A-R	TRANSISTOR	1	
Q3	2SB710A-R	TRANSISTOR	1	
Q4	2SD602A-R	TRANSISTOR	1	
Q5	2SB710A-R	TRANSISTOR	1	
Q6,Q7	2SD602A-R	TRANSISTOR	2	
Q101,02	2SK198	TRANSISTOR	2	
Q103-06	2SD1328	TRANSISTOR	4	
Q201,02	2SD1994A-R	TRANSISTOR	2	
Q203,04	2SB1322A-R	TRANSISTOR	2	
Q205,06	2SD1994A-R	TRANSISTOR	2	
Q207,08	2SB1322A-R	TRANSISTOR	2	
Q209,10	2SD602A-R	TRANSISTOR	2	
Q211,12	2SB710A-R	TRANSISTOR	2	
Q341-44	2SB710A-R	TRANSISTOR	4	
QR1-R3	UN2213	TRANSISTOR-RESISTOR	3	
QR101,02	UN2213	TRANSISTOR-RESISTOR	2	
QR103,04	UN2113	TRANSISTOR-RESISTOR	2	
QR341	UN2113	TRANSISTOR-RESISTOR	1	
QR342-44	UN2213	TRANSISTOR-RESISTOR	3	
R1	ERJ6GEYG332	M.RESISTOR CH 1/10W 3.3K	1	
R2	ERJ6GEYF472	M.RESISTOR CH 1/10W 4.7K	1	
R3	ERJ6GEYF333	M.RESISTOR CH 1/10W 33K	1	
R4	ERJ6GEYF472	M.RESISTOR CH 1/10W 4.7K	1	
R5	ERJ6GEYG470	M.RESISTOR CH 1/10W 47	1	
R6	ERJ6GEYG101	M.RESISTOR CH 1/10W 100	1	
R7	ERJ6GEYG332	M.RESISTOR CH 1/10W 3.3K	1	
R8	ERJ6GEYF472	M.RESISTOR CH 1/10W 4.7K	1	
R9,10	ERJ6GEYG471	M.RESISTOR CH 1/10W 470	2	
R11	ERJ6GEYG180	M.RESISTOR CH 1/10W 18	1	
R12,13	ERJ6GEYJ1R0	M.RESISTOR CH 1/10W 1	2	
R14	ERJ6GEYG332	M.RESISTOR CH 1/10W 3.3K	1	
R15	ERJ6GEYF472	M.RESISTOR CH 1/10W 4.7K	1	
R16,17	ERJ6GEYG103	M.RESISTOR CH 1/10W 10K	2	
R18	ERJ6GEYG222	M.RESISTOR CH 1/10W 2.2K	1	
R19,20	ERJ6GEYG471	M.RESISTOR CH 1/10W 470	2	
R21	ERJ6GEYG180	M.RESISTOR CH 1/10W 18	1	
R22	ERJ6GEYF473	M.RESISTOR CH 1/10W 47K	1	
R23	ERJ6GEYJ100	M.RESISTOR CH 1/10W 10	1	
R25	ERJ6GEYG222	M.RESISTOR CH 1/10W 2.2K	1	
R26	ERJ6GEYG470	M.RESISTOR CH 1/10W 47	1	
R27	ERJ6GEYG102	M.RESISTOR CH 1/10W 1K	1	
R28	ERJ6GEYF124	M.RESISTOR CH 1/10W 120K	1	
R29	ERJ6GEYF333	M.RESISTOR CH 1/10W 33K	1	

Ref.No.	Part No.	Part Name & Description	Pcs	Remarks
R30	ERJ6GEYF472	M.RESISTOR CH 1/10W 4.7K	1	
R31	ERJ6GEY0R00	M.RESISTOR CH 1/10W 0	1	
R32	ERJ6GEYG101	M.RESISTOR CH 1/10W 100	1	
R33	ERJ6RBD152	M.RESISTOR CH 1/10W 1.5K	1	
R34	ERJ6GEYG101	M.RESISTOR CH 1/10W 100	1	
R35	ERJ6RBD392	M.RESISTOR CH 1/10W 3.9K	1	
R36	ERJ6GEYG103	M.RESISTOR CH 1/10W 10K	1	
R37	ERJ6RBD103	M.RESISTOR CH 1/10W 10K	1	
R38	ERJ6RBD223	M.RESISTOR CH 1/10W 22K	1	
R39	ERJ6GEYG103	M.RESISTOR CH 1/10W 10K	1	
R40	ERJ6RBD202	M.RESISTOR CH 1/10W 2K	1	
R41	ERJ6GEYG562	M.RESISTOR CH 1/10W 5.6K	1	
R42	ERJ6RBD122	M.RESISTOR CH 1/10W 1.2K	1	
R43	ERJ6GEYG103	M.RESISTOR CH 1/10W 10K	1	
R44	ERJ6RBD271	M.RESISTOR CH 1/10W 270	1	
R45	ERJ6RBD562	M.RESISTOR CH 1/10W 5.6K	1	
R46	ERJ6GEYG103	M.RESISTOR CH 1/10W 10K	1	
R51	ERJ6GEY0R00	M.RESISTOR CH 1/10W 0	1	
R52	ERJ6RBD223	M.RESISTOR CH 1/10W 22K	1	
R54	ERJ6GEY0R00	M.RESISTOR CH 1/10W 0	1	
R56	ERJ6GEYG182	M.RESISTOR CH 1/10W 1.8K	1	
R58	ERJ6GEYG103	M.RESISTOR CH 1/10W 10K	1	
R59	ERJ6RBD103	M.RESISTOR CH 1/10W 10K	1	
R60	ERJ6RBD202	M.RESISTOR CH 1/10W 2K	1	
R61	ERJ6RBD391	M.RESISTOR CH 1/10W 390	1	
R62	ERJ6RBD682	M.RESISTOR CH 1/10W 6.8K	1	
R63	ERJ6RBD391	M.RESISTOR CH 1/10W 390	1	
R64	ERJ6RBD153	M.RESISTOR CH 1/10W 15K	1	
R65,66	ERJ6RBD822	M.RESISTOR CH 1/10W 8.2K	2	
R68	ERJ6RBD103	M.RESISTOR CH 1/10W 10K	1	
R76,77	ERJ6RBD153	M.RESISTOR CH 1/10W 15K	2	
R78	ERJ6GEYF472	M.RESISTOR CH 1/10W 4.7K	1	
R79	ERJ6GEYG103	M.RESISTOR CH 1/10W 10K	1	
R80-82	ERJ6RBD472	M.RESISTOR CH 1/10W 4.7K	3	
R83	ERJ6GEYG103	M.RESISTOR CH 1/10W 10K	1	
R84,85	ERJ6RBD103	M.RESISTOR CH 1/10W 10K	2	
R86	ERJ6GEYJ100	M.RESISTOR CH 1/10W 10	1	
R87	ERJ6RBD103	M.RESISTOR CH 1/10W 10K	1	
R88,89	ERJ6RBD472	M.RESISTOR CH 1/10W 4.7K	2	
R90	ERJ6RBD103	M.RESISTOR CH 1/10W 10K	1	
R101,02	ERJ6GEYF472	M.RESISTOR CH 1/10W 4.7K	2	
R103,04	ERJ6RBD331	M.RESISTOR CH 1/10W 330	2	
R105	ERJ6GEYG103	M.RESISTOR CH 1/10W 10K	1	
R106	ERJ6GEYG471	M.RESISTOR CH 1/10W 470	1	
R108,09	ERJ6GEYJ100	M.RESISTOR CH 1/10W 10	2	
R110-17	ERJ6RBD103	M.RESISTOR CH 1/10W 10K	8	
R118,19	ERJ6RBD391	M.RESISTOR CH 1/10W 390	2	
R120,21	ERJ6RBD222	M.RESISTOR CH 1/10W 2.2K	2	
R122,23	ERJ6RBD682	M.RESISTOR CH 1/10W 6.8K	2	
R124,25	ERJ6GEYG103	M.RESISTOR CH 1/10W 10K	2	
R126,27	ERJ6RBD392	M.RESISTOR CH 1/10W 3.9K	2	
R128,29	ERJ6RBD561	M.RESISTOR CH 1/10W 560	2	
R130,31	ERJ6GEYG103	M.RESISTOR CH 1/10W 10K	2	
R132,33	ERJ6GEYG105	M.RESISTOR CH 1/10W 1M	2	
R134,35	ERJ6GEYF393	M.RESISTOR CH 1/10W 39K	2	
R136,37	ERJ6GEYF472	M.RESISTOR CH 1/10W 4.7K	2	
R138,39	ERJ6GEYG273	M.RESISTOR CH 1/10W 27K	2	
R140,41	ERJ6GEYG104	M.RESISTOR CH 1/10W 100K	2	
R142,43	ERJ6RBD223	M.RESISTOR CH 1/10W 22K	2	
R144,45	ERJ6RBD222	M.RESISTOR CH 1/10W 2.2K	2	
R146,47	ERJ6RBD102	M.RESISTOR CH 1/10W 1K	2	
R148,49	ERJ6GEYG683	M.RESISTOR CH 1/10W 68K	2	
R150,51	ERJ6GEYG103	M.RESISTOR CH 1/10W 10K	2	
R152,53	ERJ6GEYG105	M.RESISTOR CH 1/10W 1M	2	
R154,55	ERJ6RBD123	M.RESISTOR CH 1/10W 12K	2	
R156,57	ERJ6GEYF472	M.RESISTOR CH 1/10W 4.7K	2	
R158,59	ERJ6GEYG102	M.RESISTOR CH 1/10W 1K	2	
R160,61	ERJ6GEYG103	M.RESISTOR CH 1/10W 10K	2	
R162,63	ERJ6RBD392	M.RESISTOR CH 1/10W 3.9K	2	
R164,65	ERJ6RED220	M.RESISTOR CH 1/10W 22	2	
R166,67	ERJ6RBD102	M.RESISTOR CH 1/10W 1K	2	
R168,69	ERJ6GEYG103	M.RESISTOR CH 1/10W 10K	2	
R170,71	ERJ6GEYG102	M.RESISTOR CH 1/10W 1K	2	
R172,73	ERJ6GEYG223	M.RESISTOR CH 1/10W 22K	2	
R174,75	ERJ6GEYG103	M.RESISTOR CH 1/10W 10K	2	

Ref.No.	Part No.	Part Name & Description	Pcs	Remarks
R176,77	ERJ14YJ151	M.RESISTOR CH 1/4W 150	2	
R180,81	ERJ6GEYG102	M.RESISTOR CH 1/10W 1K	2	
R184,85	ERJ6GEY0R00	M.RESISTOR CH 1/10W 0	2	
R201,02	ERJ6GEYF473	M.RESISTOR CH 1/10W 47K	2	
R203,04	ERJ6RBD301	M.RESISTOR CH 1/10W 300	2	
R205,06	ERJ6RBD272	M.RESISTOR CH 1/10W 2.7K	2	
R207,08	ERJ6RBD301	M.RESISTOR CH 1/10W 300	2	
R209,10	ERJ6RBD472	M.RESISTOR CH 1/10W 4.7K	2	
R211,12	ERJ6RBD123	M.RESISTOR CH 1/10W 12K	2	
R213,14	ERJ6RBD512	M.RESISTOR CH 1/10W 5.1K	2	
R215,16	ERJ6RBD472	M.RESISTOR CH 1/10W 4.7K	2	
R217,18	ERJ6RBD102	M.RESISTOR CH 1/10W 1K	2	
R219,20	ERJ6RBD103	M.RESISTOR CH 1/10W 10K	2	
R221,22	ERJ6GEYG563	M.RESISTOR CH 1/10W 56K	2	
R223,24	ERJ6GEYF472	M.RESISTOR CH 1/10W 4.7K	2	
R225,26	ERJ6RBD183	M.RESISTOR CH 1/10W 18K	2	
R227-30	ERJ6RBD472	M.RESISTOR CH 1/10W 4.7K	4	
R231	ERJ6GEYG105	M.RESISTOR CH 1/10W 1M	1	
R232,33	ERJ6RBD153	M.RESISTOR CH 1/10W 15K	2	
R234	ERJ6GEYG105	M.RESISTOR CH 1/10W 1M	1	
R235,36	ERJ6RBD153	M.RESISTOR CH 1/10W 15K	2	
R237-40	ERJ6RBD472	M.RESISTOR CH 1/10W 4.7K	4	
R241	ERJ6GEYG562	M.RESISTOR CH 1/10W 5.6K	1	
R242	ERJ6GEYJ100	M.RESISTOR CH 1/10W 10	1	
R243	ERJ6RBD153	M.RESISTOR CH 1/10W 15K	1	
R244	ERJ6GEYG562	M.RESISTOR CH 1/10W 5.6K	1	
R245	ERJ6GEYJ100	M.RESISTOR CH 1/10W 10	1	
R246	ERJ6RBD153	M.RESISTOR CH 1/10W 15K	1	
R247	ERJ6GEYG562	M.RESISTOR CH 1/10W 5.6K	1	
R248,49	ERJ6RED150	M.RESISTOR CH 1/10W 15	2	
R250-52	ERJ6GEYG562	M.RESISTOR CH 1/10W 5.6K	3	
R255,56	ERJ6GEYG105	M.RESISTOR CH 1/10W 1M	2	
R257,58	ERJ6GEYJ100	M.RESISTOR CH 1/10W 10	2	
R259,60	ERJ6GEYG562	M.RESISTOR CH 1/10W 5.6K	2	
R261,62	ERJ6RBD153	M.RESISTOR CH 1/10W 15K	2	
R263-65	ERJ14YJ100	M.RESISTOR CH 1/4W 10	3	
R266,67	ERJ14YJ220	M.RESISTOR CH 1/4W 22	2	
R268-72	ERJ14YJ100	M.RESISTOR CH 1/4W 10	5	
R273,74	ERJ14YJ220	M.RESISTOR CH 1/4W 22	2	
R275,76	ERJ6GEYG102	M.RESISTOR CH 1/10W 1K	2	
R277,78	ERJ6GEYG103	M.RESISTOR CH 1/10W 10K	2	
R279-82	ERJ6GEYF561	M.RESISTOR CH 1/10W 560	4	
R283,84	ERJ6GEYG103	M.RESISTOR CH 1/10W 10K	2	
R285,86	ERJ6GEYG102	M.RESISTOR CH 1/10W 1K	2	
R287-90	ERJ6GEYG103	M.RESISTOR CH 1/10W 10K	4	
R291,92	ERJ6GEY0R00	M.RESISTOR CH 1/10W 0	2	
R301-08	ERJ6GEY0R00	M.RESISTOR CH 1/10W 0	8	
R309	ERJ6GEYG563	M.RESISTOR CH 1/10W 56K	1	
R310-13	ERJ6GEY0R00	M.RESISTOR CH 1/10W 0	4	
R316	ERJ6GEYG105	M.RESISTOR CH 1/10W 1M	1	
R317-19	ERJ6GEYF473	M.RESISTOR CH 1/10W 47K	3	
R320	ERJ6GEYG182	M.RESISTOR CH 1/10W 1.8K	1	
R321,22	ERJ6GEYF473	M.RESISTOR CH 1/10W 47K	2	
R341	ERJ6GEYG683	M.RESISTOR CH 1/10W 68K	1	
R342-47	ERJ6GEYG103	M.RESISTOR CH 1/10W 10K	6	
R348	ERJ6GEY0R00	M.RESISTOR CH 1/10W 0	1	
R349	ERJ6GEYG104	M.RESISTOR CH 1/10W 100K	1	
R350	ERJ6GEYF333	M.RESISTOR CH 1/10W 33K	1	
R351	ERJ6GEYF473	M.RESISTOR CH 1/10W 47K	1	
R352	ERJ6GEYG103	M.RESISTOR CH 1/10W 10K	1	
R353	ERJ6GEYG222	M.RESISTOR CH 1/10W 2.2K	1	
R354	ERJ6GEYF473	M.RESISTOR CH 1/10W 47K	1	
R355	ERJ6GEYG105	M.RESISTOR CH 1/10W 1M	1	
R356	ERJ6GEYG103	M.RESISTOR CH 1/10W 10K	1	
R357,58	ERJ6GEYF473	M.RESISTOR CH 1/10W 47K	2	
R359,60	ERJ6GEYG104	M.RESISTOR CH 1/10W 100K	2	
R361-63	ERJ6GEY0R00	M.RESISTOR CH 1/10W 0	3	
T1	VLT0866	TRANSFORMER	1	G4ZZ00000360
T2,T3	VLT0867	TRANSFORMER	2	G4ZZ00000361
TG1	VJR0646	TEST POINT	1	D0X0R0000022
TG11	VJR0646	TEST POINT	1	D0X0R0000022
TG50	VJR0646	TEST POINT	1	D0X0R0000022
TG100	VJR0646	TEST POINT	1	D0X0R0000022

Ref.No.	Part No.	Part Name & Description	Pcs	Remarks
TG300	VJR0646	TEST POINT	1	D0X0R0000022
TP2,P3	VJR0646	TEST POINT	2	D0X0R0000022
TP12	VJR0646	TEST POINT	1	D0X0R0000022
TP51	VJR0646	TEST POINT	1	D0X0R0000022
TP101-03	VJR0646	TEST POINT	3	D0X0R0000022
TP301	VJR0646	TEST POINT	1	D0X0R0000022
TP302-06	EYF6CU	TEST POINT	5	
VR1	EVMEGSA00B54	V.RESISTOR 50K	1	
VR51	EVMEGSA00B14	V.RESISTOR 10K	1	
VR101,02	EVMEGSA00B14	V.RESISTOR 10K	2	
VR201,02	EVMEASA00B52	V.RESISTOR 500	2	
		MISCELLANEOUS		
	VML2143	CARD PULLER	1	
	VML2144	CARD PULLER	1	
■ E12	VEP84365A	H6 A DA P.C.BOARD	1	(RTL)
C401,02	EEVHB1C470	E.CAPACITOR 16V 47U	2	
C403,04	ECUM1E104ZFN	C.CAPACITOR CH 25V 0.1U	2	
C405,06	EEVHB0J101	E.CAPACITOR 6.3V 100U	2	
C407,08	ECUM1E104ZFN	C.CAPACITOR CH 25V 0.1U	2	
C409,10	EEVHB1C470	E.CAPACITOR 16V 47U	2	
C413,14	ECUM1E104ZFN	C.CAPACITOR CH 25V 0.1U	2	
C415,16	EEVHB1C220	E.CAPACITOR 16V 22U	2	
C417,18	ECUM1E104ZFN	C.CAPACITOR CH 25V 0.1U	2	
C419,20	EEVHB1C100	E.CAPACITOR 16V 10U	2	
C421,22	ECUM1E104ZFN	C.CAPACITOR CH 25V 0.1U	2	
C423,24	EEVHB0J101	E.CAPACITOR 6.3V 100U	2	
C425-28	ECUM1E104ZFN	C.CAPACITOR CH 25V 0.1U	4	
C429-38	ECUM1H103KBN	C.CAPACITOR CH 50V 0.01U	10	
C439-42	EEVHP1C100	E.CAPACITOR 16V 10U	4	EEVHP1C100R
C451-54	ECUM1H221JCN	C.CAPACITOR CH 50V 220P	4	
C455-59	ECUM1E104ZFN	C.CAPACITOR CH 25V 0.1U	5	
C501,02	ECUX1C105KBM	C.CAPACITOR CH 16V 1U	2	
C503,04	ECHU1C472G	P.CAPACITOR 16V 4700P	2	
C505-08	ECUM1E104ZFN	C.CAPACITOR CH 25V 0.1U	4	
C509,10	EEVHP1C100	E.CAPACITOR 16V 10U	2	EEVHP1C100R
C511-14	ECUM1E104ZFN	C.CAPACITOR CH 25V 0.1U	4	
C517-24	ECUM1H103KBN	C.CAPACITOR CH 50V 0.01U	8	
C525,26	ECUM1H470JCN	C.CAPACITOR CH 50V 47P	2	
C527,28	ECUM1H270JCN	C.CAPACITOR CH 50V 27P	2	
C529-36	EEVHB1C100	E.CAPACITOR 16V 10U	8	
C537-40	ECA1CHG471	C.CAPACITOR 16V 470U	4	
C541-44	EEVHB1C220	E.CAPACITOR 16V 22U	4	
C545-48	ECUM1H103KBN	C.CAPACITOR CH 50V 0.01U	4	
C549-52	EEVHB1C220	E.CAPACITOR 16V 22U	4	
C553-56	ECUM1H103KBN	C.CAPACITOR CH 50V 0.01U	4	
C557-60	EEVHB1C470	E.CAPACITOR 16V 47U	4	
C561-68	ECUM1E104ZFN	C.CAPACITOR CH 25V 0.1U	8	
C569-74	EEVHB1C470	E.CAPACITOR 16V 47U	6	
C575-78	ECUM1E104ZFN	C.CAPACITOR CH 25V 0.1U	4	
C579,80	EEVHB1C470	E.CAPACITOR 16V 47U	2	
C601,02	ECUX1C105KBM	C.CAPACITOR CH 16V 1U	2	
C603,04	ECHU1C472G	P.CAPACITOR 16V 4700P	2	
C605-08	ECUM1E104ZFN	C.CAPACITOR CH 25V 0.1U	4	
C609,10	EEVHP1C100	E.CAPACITOR 16V 10U	2	EEVHP1C100R
C611-14	ECUM1E104ZFN	C.CAPACITOR CH 25V 0.1U	4	
C617-24	ECUM1H103KBN	C.CAPACITOR CH 50V 0.01U	8	
C625,26	ECUM1H470JCN	C.CAPACITOR CH 50V 47P	2	
C627,28	ECUM1H270JCN	C.CAPACITOR CH 50V 27P	2	
C629-36	EEVHB1C100	E.CAPACITOR 16V 10U	8	
C637-40	ECA1CHG471	C.CAPACITOR 16V 470U	4	
C641-44	EEVHB1C220	E.CAPACITOR 16V 22U	4	
C645-48	ECUM1H103KBN	C.CAPACITOR CH 50V 0.01U	4	
C649-52	EEVHB1C220	E.CAPACITOR 16V 22U	4	
C653-56	ECUM1H103KBN	C.CAPACITOR CH 50V 0.01U	4	

Ref.No.	Part No.	Part Name & Description	Pcs	Remarks
C657-60	EEVHB1C470	E.CAPACITOR 16V 47U	4	
C661-68	ECUM1E104ZFN	C.CAPACITOR CH 25V 0.1U	8	
C669-74	EEVHB1C470	E.CAPACITOR 16V 47U	6	
C675-78	ECUM1E104ZFN	C.CAPACITOR CH 25V 0.1U	4	
C679,80	EEVHB1C470	E.CAPACITOR 16V 47U	2	
C701	EEVHB1C470	E.CAPACITOR 16V 47U	1	
C702	ECUM1E104ZFN	C.CAPACITOR CH 25V 0.1U	1	
C703-06	ECUM1H103KBN	C.CAPACITOR CH 50V 0.01U	4	
C707,08	ECUM1E104ZFN	C.CAPACITOR CH 25V 0.1U	2	
C709	ECUM1H103KBN	C.CAPACITOR CH 50V 0.01U	1	
C711	ECUM1E104ZFN	C.CAPACITOR CH 25V 0.1U	1	
C751-54	EEVHB1C470	E.CAPACITOR 16V 47U	4	
D401,02	MA704A	DIODE	2	
D501,02	MA716	DIODE	2	
D503-06	MA157A	DIODE	4	
D507	MA716	DIODE	1	
D601,02	MA716	DIODE	2	
D603-06	MA157A	DIODE	4	
D607	MA716	DIODE	1	
FL701	VLF0941C223	FILTER	1	
IC401,02	NJM78L05UA	IC	2	C0CBADC00010
IC403,04	AK4320VM	IC	2	C0FBBJ000006
IC405-08	NJM4580ED	IC	4	C0ABBB000123
IC409-12	TC4W53F	IC	4	C0JBAR000225
IC413,14	TC7W74F	IC	2	
IC415,16	MC74HC157AF	IC	2	
IC417	MC74HC541AF	IC	1	
IC501,02	NJM78L09UA	IC	2	C0CBAHC00002
IC503,04	NJM79L09UA	IC	2	C0CABBF00001
IC505,06	NJM4580ED	IC	2	C0ABBB000123
IC507,08	C0JBAR000242	IC	2	
IC509,10	NJM4580ED	IC	2	C0ABBB000123
IC511,12	NJM2043MD	IC	2	
IC513-16	AQV212SX	IC	4	
IC517	NJM78L05UA	IC	1	C0CBADC00010
IC518	NJM79L05UA	IC	1	
IC601,02	NJM78L09UA	IC	2	C0CBAHC00002
IC603,04	NJM79L09UA	IC	2	C0CABBF00001
IC605,06	NJM4580ED	IC	2	C0ABBB000123
IC607,08	C0JBAR000242	IC	2	
IC609,10	NJM4580ED	IC	2	C0ABBB000123
IC611,12	NJM2043MD	IC	2	
IC613-16	AQV212SX	IC	4	
IC617	NJM78L05UA	IC	1	C0CBADC00010
IC618	NJM79L05UA	IC	1	
IC701,02	SN74S1051NS	IC	2	
IC703	74F245SJ	IC	1	C0JBCZ000183
IC704	74F541SJ	IC	1	C0JBCZ000190
IC705	74AC139SJ	IC	1	
IC706	TC7S04F	IC	1	C0JBAB000169
IC707,08	UPD71055GB	IC	2	
L401,02	VLQ0163J100	COIL 10UH	2	
L403,04	VLQ0576	COIL	2	
P1	VJP3454B096	CONNECTOR (MALE)	1	K1KA96B00021
Q401-04	2SK198-R	TRANSISTOR	4	2SK01980R
Q501,02	2SD1328	TRANSISTOR	2	
Q503-06	2SD1994A-R	TRANSISTOR	4	
Q507-10	2SB1322A-R	TRANSISTOR	4	
Q511,12	2SD602A-R	TRANSISTOR	2	
Q513,14	2SB710A-R	TRANSISTOR	2	
Q601,02	2SD1328	TRANSISTOR	2	
Q603-06	2SD1994A-R	TRANSISTOR	4	
Q607-10	2SB1322A-R	TRANSISTOR	4	
Q611,12	2SD602A-R	TRANSISTOR	2	
Q613,14	2SB710A-R	TRANSISTOR	2	
Q701	2SB710A-R	TRANSISTOR	1	
QR401-03	UN2213	TRANSISTOR-RESISTOR	3	
QR404	UN2113	TRANSISTOR-RESISTOR	1	

Ref.No.	Part No.	Part Name & Description	Pcs	Remarks
QR501,02	UN2213	TRANSISTOR-RESISTOR	2	
QR503,04	UN2113	TRANSISTOR-RESISTOR	2	
QR601,02	UN2213	TRANSISTOR-RESISTOR	2	
QR603,04	UN2113	TRANSISTOR-RESISTOR	2	
QR701	UN2213	TRANSISTOR-RESISTOR	1	
R401,02	ERJ6GEY0R00	M.RESISTOR CH 1/10W 0	2	
R403-10	ERJ6GEYF473	M.RESISTOR CH 1/10W 47K	8	
R411,12	ERJ6GEY0R00	M.RESISTOR CH 1/10W 0	2	
R413-16	ERJ6GEYF473	M.RESISTOR CH 1/10W 47K	4	
R419,20	ERJ6GEYF473	M.RESISTOR CH 1/10W 47K	2	
R421-24	ERJ6RBD391	M.RESISTOR CH 1/10W 390	4	
R425-28	ERJ6RBD222	M.RESISTOR CH 1/10W 2.2K	4	
R429-32	ERJ6RBD103	M.RESISTOR CH 1/10W 10K	4	
R433-36	ERJ6RBD682	M.RESISTOR CH 1/10W 6.8K	4	
R437-40	ERJ6RBD392	M.RESISTOR CH 1/10W 3.9K	4	
R441-44	ERJ6RBD561	M.RESISTOR CH 1/10W 560	4	
R445-48	ERJ6GEYG105	M.RESISTOR CH 1/10W 1M	4	
R449-52	ERJ6GEYG103	M.RESISTOR CH 1/10W 10K	4	
R453-60	ERJ6GEYF472	M.RESISTOR CH 1/10W 4.7K	8	
R461-64	ERJ6GEYG273	M.RESISTOR CH 1/10W 27K	4	
R467,68	ERJ6GEY0R00	M.RESISTOR CH 1/10W 0	2	
R469,70	ERJ6GEYG683	M.RESISTOR CH 1/10W 68K	2	
R473-76	ERJ6GEYF561	M.RESISTOR CH 1/10W 560	4	
R477-80	ERJ6GEYG102	M.RESISTOR CH 1/10W 1K	4	
R481-84	ERJ6GEYG103	M.RESISTOR CH 1/10W 10K	4	
R485,86	ERJ6GEY0R00	M.RESISTOR CH 1/10W 0	2	
R487-90	ERJ6GEYF561	M.RESISTOR CH 1/10W 560	4	
R491-94	ERJ6GEYG102	M.RESISTOR CH 1/10W 1K	4	
R495-98	ERJ6GEYG103	M.RESISTOR CH 1/10W 10K	4	
R499,00	ERJ6GEY0R00	M.RESISTOR CH 1/10W 0	2	
R501,02	ERJ6GEYG104	M.RESISTOR CH 1/10W 100K	2	
R503,04	ERJ6GEYG683	M.RESISTOR CH 1/10W 68K	2	
R505,06	ERJ6GEYG103	M.RESISTOR CH 1/10W 10K	2	
R507,08	ERJ6RBD223	M.RESISTOR CH 1/10W 22K	2	
R509,10	ERJ6RBD222	M.RESISTOR CH 1/10W 2.2K	2	
R511,12	ERJ6RBD102	M.RESISTOR CH 1/10W 1K	2	
R513,14	ERJ6GEYG105	M.RESISTOR CH 1/10W 1M	2	
R515,16	ERJ6RBD123	M.RESISTOR CH 1/10W 12K	2	
R517,18	ERJ6GEYF472	M.RESISTOR CH 1/10W 4.7K	2	
R519,20	ERJ6GEYG102	M.RESISTOR CH 1/10W 1K	2	
R521,22	ERJ6GEYG103	M.RESISTOR CH 1/10W 10K	2	
R523,24	ERJ6RBD301	M.RESISTOR CH 1/10W 300	2	
R525,26	ERJ6RBD512	M.RESISTOR CH 1/10W 5.1K	2	
R527,28	ERJ6RBD472	M.RESISTOR CH 1/10W 4.7K	2	
R529,30	ERJ6RBD272	M.RESISTOR CH 1/10W 2.7K	2	
R531,32	ERJ6RBD123	M.RESISTOR CH 1/10W 12K	2	
R533,34	ERJ6RBD102	M.RESISTOR CH 1/10W 1K	2	
R535,36	ERJ6RBD301	M.RESISTOR CH 1/10W 300	2	
R537,38	ERJ6RBD472	M.RESISTOR CH 1/10W 4.7K	2	
R539,40	ERJ6RBD103	M.RESISTOR CH 1/10W 10K	2	
R541,42	ERJ6GEYG563	M.RESISTOR CH 1/10W 56K	2	
R543,44	ERJ6GEYF472	M.RESISTOR CH 1/10W 4.7K	2	
R545,46	ERJ6RBD682	M.RESISTOR CH 1/10W 6.8K	2	
R547-54	ERJ6RBD472	M.RESISTOR CH 1/10W 4.7K	8	
R555-58	ERJ6GEYG105	M.RESISTOR CH 1/10W 1M	4	
R559-66	ERJ6RBD153	M.RESISTOR CH 1/10W 15K	8	
R567,68	ERJ6RED150	M.RESISTOR CH 1/10W 15	2	
R571-74	ERJ6GEYJ100	M.RESISTOR CH 1/10W 10	4	
R575-82	ERJ6GEYG562	M.RESISTOR CH 1/10W 5.6K	8	
R583-90	ERJ14YJ100	M.RESISTOR CH 1/4W 10	8	
R591-94	ERJ14YJ220	M.RESISTOR CH 1/4W 22	4	
R595,96	ERJ6GEYG103	M.RESISTOR CH 1/10W 10K	2	
R598	ERJ6GEYG103	M.RESISTOR CH 1/10W 10K	1	
R601,02	ERJ6GEYG104	M.RESISTOR CH 1/10W 100K	2	
R603,04	ERJ6GEYG683	M.RESISTOR CH 1/10W 68K	2	
R605,06	ERJ6GEYG103	M.RESISTOR CH 1/10W 10K	2	
R607,08	ERJ6RBD223	M.RESISTOR CH 1/10W 22K	2	
R609,10	ERJ6RBD222	M.RESISTOR CH 1/10W 2.2K	2	
R611,12	ERJ6RBD102	M.RESISTOR CH 1/10W 1K	2	
R613,14	ERJ6GEYG105	M.RESISTOR CH 1/10W 1M	2	
R615,16	ERJ6RBD123	M.RESISTOR CH 1/10W 12K	2	
R617,18	ERJ6GEYF472	M.RESISTOR CH 1/10W 4.7K	2	
R619,20	ERJ6GEYG102	M.RESISTOR CH 1/10W 1K	2	
R621,22	ERJ6GEYG103	M.RESISTOR CH 1/10W 10K	2	

Ref.No.	Part No.	Part Name & Description	Pcs	Remarks
R623,24	ERJ6RBD301	M.RESISTOR CH 1/10W 300	2	
R625,26	ERJ6RBD512	M.RESISTOR CH 1/10W 5.1K	2	
R627,28	ERJ6RBD472	M.RESISTOR CH 1/10W 4.7K	2	
R629,30	ERJ6RBD272	M.RESISTOR CH 1/10W 2.7K	2	
R631,32	ERJ6RBD123	M.RESISTOR CH 1/10W 12K	2	
R633,34	ERJ6RBD102	M.RESISTOR CH 1/10W 1K	2	
R635,36	ERJ6RBD301	M.RESISTOR CH 1/10W 300	2	
R637,38	ERJ6RBD472	M.RESISTOR CH 1/10W 4.7K	2	
R639,40	ERJ6RBD103	M.RESISTOR CH 1/10W 10K	2	
R641,42	ERJ6GEYG563	M.RESISTOR CH 1/10W 56K	2	
R643,44	ERJ6GEYF472	M.RESISTOR CH 1/10W 4.7K	2	
R645,46	ERJ6RBD682	M.RESISTOR CH 1/10W 6.8K	2	
R647-54	ERJ6RBD472	M.RESISTOR CH 1/10W 4.7K	8	
R655-58	ERJ6GEYG105	M.RESISTOR CH 1/10W 1M	4	
R659-66	ERJ6RBD153	M.RESISTOR CH 1/10W 15K	8	
R667,68	ERJ6RED150	M.RESISTOR CH 1/10W 15	2	
R671-74	ERJ6GEYJ100	M.RESISTOR CH 1/10W 10	4	
R675-82	ERJ6GEYG562	M.RESISTOR CH 1/10W 5.6K	8	
R683-90	ERJ14YJ100	M.RESISTOR CH 1/4W 10	8	
R691-94	ERJ14YJ220	M.RESISTOR CH 1/4W 22	4	
R695-98	ERJ6GEYG103	M.RESISTOR CH 1/10W 10K	4	
R701-06	ERJ6GEYG103	M.RESISTOR CH 1/10W 10K	6	
R718	ERJ6GEYG104	M.RESISTOR CH 1/10W 100K	1	
R719	ERJ6GEYF333	M.RESISTOR CH 1/10W 33K	1	
R720	ERJ6GEYG222	M.RESISTOR CH 1/10W 2.2K	1	
R721	ERJ6GEYG104	M.RESISTOR CH 1/10W 100K	1	
R4595	ERJ6GEYG103	M.RESISTOR CH 1/10W 10K	1	
R4762	ERJ6GEYF473	M.RESISTOR CH 1/10W 47K	1	
TG401	VJR0646	TEST POINT	1	D0X0R0000022
TG501,02	VJR0646	TEST POINT	2	D0X0R0000022
TP401-04	VJR0646	TEST POINT	4	D0X0R0000022
TP501,02	VJR0646	TEST POINT	2	D0X0R0000022
TP601,02	VJR0646	TEST POINT	2	D0X0R0000022
VR501,02	EVMEGSA00B14	V.RESISTOR 10K	2	
VR503,04	EVMEASA00B52	V.RESISTOR 500	2	
VR601,02	EVMEGSA00B14	V.RESISTOR 10K	2	
VR603,04	EVMEASA00B52	V.RESISTOR 500	2	
		MISCELLANEOUS		
	VML2143	CARD PULLER	1	
	VML2144	CARD PULLER	1	
■ E13	VEP84364A	H7 A AD P.C.BOARD	1	(RTL)
C1-C4	ECUM1E104ZFN	C.CAPACITOR CH 25V 0.1U	4	
C5,C6	EEVHB1C470	E.CAPACITOR 16V 47U	2	
C7,C8	ECA1HHG330	E.CAPACITOR 50V 33U	2	
C9	ECUM1E104ZFN	C.CAPACITOR CH 25V 0.1U	1	
C10,11	EEVHB1C470	E.CAPACITOR 16V 47U	2	
C12	ECUM1H330JCN	C.CAPACITOR CH 50V 33P	1	
C13	ECUM1E104ZFN	C.CAPACITOR CH 25V 0.1U	1	
C14	ECUM1H820JCN	C.CAPACITOR CH 50V 82P	1	
C15	ECUM1E104ZFN	C.CAPACITOR CH 25V 0.1U	1	
C16	EEVHP1C100	E.CAPACITOR 16V 10U	1	EEVHP1C100R
C19	EEVHP1C100	E.CAPACITOR 16V 10U	1	EEVHP1C100R
C20	ECHU1C472G	P.CAPACITOR 16V 4700P	1	
C21	ECUM1H330JCN	C.CAPACITOR CH 50V 33P	1	
C22,23	ECUM1H103KBN	C.CAPACITOR CH 50V 0.01U	2	
C24	ECUM1H561JCN	C.CAPACITOR CH 50V 560P	1	
C25	ECUM1H182KBN	C.CAPACITOR CH 50V 1800P	1	
C26	ECUM1H101JCN	C.CAPACITOR CH 50V 100P	1	
C27	EEVHP1C100	E.CAPACITOR 16V 10U	1	EEVHP1C100R
C29-34	ECUM1H103KBN	C.CAPACITOR CH 50V 0.01U	6	
C51-54	ECUM1E104ZFN	C.CAPACITOR CH 25V 0.1U	4	
C55,56	EEVHB1C470	E.CAPACITOR 16V 47U	2	
C57,58	ECA1HHG330	E.CAPACITOR 50V 33U	2	

Ref.No.	Part No.	Part Name & Description	Pcs	Remarks
C64	ECUM1H820JCN	C.CAPACITOR CH 50V 82P	1	
C65	ECUM1E104ZFN	C.CAPACITOR CH 25V 0.1U	1	
C69	EEVHP1C100	E.CAPACITOR 16V 10U	1	EEVHP1C100R
C70	ECHU1C472G	P.CAPACITOR 16V 4700P	1	
C71	ECUM1H330JCN	C.CAPACITOR CH 50V 33P	1	
C72,73	ECUM1H103KBN	C.CAPACITOR CH 50V 0.01U	2	
C74	ECUM1H561JCN	C.CAPACITOR CH 50V 560P	1	
C75	ECUM1H182KBN	C.CAPACITOR CH 50V 1800P	1	
C76	ECUM1H101JCN	C.CAPACITOR CH 50V 100P	1	
C77	EEVHP1C100	E.CAPACITOR 16V 10U	1	EEVHP1C100R
C79-84	ECUM1H103KBN	C.CAPACITOR CH 50V 0.01U	6	
C91-94	ECUM1E104ZFN	C.CAPACITOR CH 25V 0.1U	4	
C95,96	EEVHB1C470	E.CAPACITOR 16V 47U	2	
C101-04	ECUM1E104ZFN	C.CAPACITOR CH 25V 0.1U	4	
C105,06	EEVHB1C470	E.CAPACITOR 16V 47U	2	
C107,08	ECA1HHG330	E.CAPACITOR 50V 33U	2	
C114	ECUM1H820JCN	C.CAPACITOR CH 50V 82P	1	
C115	ECUM1E104ZFN	C.CAPACITOR CH 25V 0.1U	1	
C119	EEVHP1C100	E.CAPACITOR 16V 10U	1	EEVHP1C100R
C120	ECHU1C472G	P.CAPACITOR 16V 4700P	1	
C121	ECUM1H330JCN	C.CAPACITOR CH 50V 33P	1	
C122,23	ECUM1H103KBN	C.CAPACITOR CH 50V 0.01U	2	
C124	ECUM1H561JCN	C.CAPACITOR CH 50V 560P	1	
C125	ECUM1H182KBN	C.CAPACITOR CH 50V 1800P	1	
C126	ECUM1H101JCN	C.CAPACITOR CH 50V 100P	1	
C127	EEVHP1C100	E.CAPACITOR 16V 10U	1	EEVHP1C100R
C129-34	ECUM1H103KBN	C.CAPACITOR CH 50V 0.01U	6	
C151-54	ECUM1E104ZFN	C.CAPACITOR CH 25V 0.1U	4	
C155,56	EEVHB1C470	E.CAPACITOR 16V 47U	2	
C157,58	ECA1HHG330	E.CAPACITOR 50V 33U	2	
C164	ECUM1H820JCN	C.CAPACITOR CH 50V 82P	1	
C165	ECUM1E104ZFN	C.CAPACITOR CH 25V 0.1U	1	
C169	EEVHP1C100	E.CAPACITOR 16V 10U	1	EEVHP1C100R
C170	ECHU1C472G	P.CAPACITOR 16V 4700P	1	
C171	ECUM1H330JCN	C.CAPACITOR CH 50V 33P	1	
C172,73	ECUM1H103KBN	C.CAPACITOR CH 50V 0.01U	2	
C174	ECUM1H561JCN	C.CAPACITOR CH 50V 560P	1	
C175	ECUM1H182KBN	C.CAPACITOR CH 50V 1800P	1	
C176	ECUM1H101JCN	C.CAPACITOR CH 50V 100P	1	
C177	EEVHP1C100	E.CAPACITOR 16V 10U	1	EEVHP1C100R
C179-84	ECUM1H103KBN	C.CAPACITOR CH 50V 0.01U	6	
C201	EEVHB1C220	E.CAPACITOR 16V 22U	1	
C202	ECUM1H330JCN	C.CAPACITOR CH 50V 33P	1	
C203	ECUM1E104ZFN	C.CAPACITOR CH 25V 0.1U	1	
C204	EEVHB0J470	E.CAPACITOR 6.3V 47U	1	
C205	ECUM1E104ZFN	C.CAPACITOR CH 25V 0.1U	1	
C206	EEVHB1C100	E.CAPACITOR 16V 10U	1	
C207	ECUM1H330JCN	C.CAPACITOR CH 50V 33P	1	
C208	ECUM1H152KBN	C.CAPACITOR CH 50V 1500P	1	
C221	EEVHB1C220	E.CAPACITOR 16V 22U	1	
C222	ECUM1H330JCN	C.CAPACITOR CH 50V 33P	1	
C223	ECUM1E104ZFN	C.CAPACITOR CH 25V 0.1U	1	
C224	EEVHB0J470	E.CAPACITOR 6.3V 47U	1	
C225	ECUM1E104ZFN	C.CAPACITOR CH 25V 0.1U	1	
C226	EEVHB1C100	E.CAPACITOR 16V 10U	1	
C227	ECUM1H330JCN	C.CAPACITOR CH 50V 33P	1	
C228	ECUM1H152KBN	C.CAPACITOR CH 50V 1500P	1	
C239,40	EEVHB1C470	E.CAPACITOR 16V 47U	2	
C241,42	EEVHB1C100	E.CAPACITOR 16V 10U	2	
C243-46	ECUM1E104ZFN	C.CAPACITOR CH 25V 0.1U	4	
C247	EEVHB1C100	E.CAPACITOR 16V 10U	1	
C248	EEVHB0J101	E.CAPACITOR 6.3V 100U	1	
C249,50	ECUM1E104ZFN	C.CAPACITOR CH 25V 0.1U	2	
C251	EEVHB1C220	E.CAPACITOR 16V 22U	1	
C252	ECUM1H330JCN	C.CAPACITOR CH 50V 33P	1	
C253	ECUM1E104ZFN	C.CAPACITOR CH 25V 0.1U	1	
C254	EEVHB0J470	E.CAPACITOR 6.3V 47U	1	
C255	ECUM1E104ZFN	C.CAPACITOR CH 25V 0.1U	1	
C256	EEVHB1C100	E.CAPACITOR 16V 10U	1	
C257	ECUM1H330JCN	C.CAPACITOR CH 50V 33P	1	
C258	ECUM1H152KBN	C.CAPACITOR CH 50V 1500P	1	
C271	EEVHB1C220	E.CAPACITOR 16V 22U	1	
C272	ECUM1H330JCN	C.CAPACITOR CH 50V 33P	1	
C273	ECUM1E104ZFN	C.CAPACITOR CH 25V 0.1U	1	
C274	EEVHB0J470	E.CAPACITOR 6.3V 47U	1	

Ref.No.	Part No.	Part Name & Description	Pcs	Remarks
C275	ECUM1E104ZFN	C.CAPACITOR CH 25V 0.1U	1	
C276	EEVHB1C100	E.CAPACITOR 16V 10U	1	
C277	ECUM1H330JCN	C.CAPACITOR CH 50V 33P	1	
C278	ECUM1H152KBN	C.CAPACITOR CH 50V 1500P	1	
C289	ECUM1E104ZFN	C.CAPACITOR CH 25V 0.1U	1	
C291,92	EEVHB1C100	E.CAPACITOR 16V 10U	2	
C293-96	ECUM1E104ZFN	C.CAPACITOR CH 25V 0.1U	4	
C297	EEVHB1C100	E.CAPACITOR 16V 10U	1	
C298	EEVHB0J101	E.CAPACITOR 6.3V 100U	1	
C299,00	ECUM1E104ZFN	C.CAPACITOR CH 25V 0.1U	2	
C301	EEVHB1C470	E.CAPACITOR 16V 47U	1	
C302	ECUM1E104ZFN	C.CAPACITOR CH 25V 0.1U	1	
C303-05	ECUM1H103KBN	C.CAPACITOR CH 50V 0.01U	3	
C306,07	ECUM1E104ZFN	C.CAPACITOR CH 25V 0.1U	2	
C308,09	ECUM1H103KBN	C.CAPACITOR CH 50V 0.01U	2	
C321-26	EEVHB1C470	E.CAPACITOR 16V 47U	6	
D1,D2	MA157	DIODE	2	
D3	MA716	DIODE	1	
D51,52	MA157	DIODE	2	
D53	MA716	DIODE	1	
D91	MA716	DIODE	1	
D101,02	MA157	DIODE	2	
D103	MA716	DIODE	1	
D151,52	MA157	DIODE	2	
D153	MA716	DIODE	1	
D291,92	MA704A	DIODE	2	
FL1	VLF0941C223	FILTER	1	
FL2-L4	VLF1356	FILTER	3	
FL5,L6	VLF0941C223	FILTER	2	
FL7,L8	VLF1356	FILTER	2	
FL301	VLF0941C223	FILTER	1	
IC1	NJM78L05UA	IC	1	C0CBADC00010
IC1	NJM78L09UA	IC	1	C0CBAHC00002
IC2	NJM2904M	IC	1	
IC2	NJM79L09UA	IC	1	C0CABBF00001
IC3	NJM4580ED	IC	1	C0ABBB000123
IC3	NJM78L05UA	IC	1	C0CBADC00010
IC4	C0JBAR000242	IC	1	
IC5	NJM2122M	IC	1	
IC5	NJM4580ED	IC	1	C0ABBB000123
IC6	AD7945BR	IC	1	
IC7	NJM4580ED	IC	1	C0ABBB000123
IC8	C0JBAR000242	IC	1	
IC9	NJM4580ED	IC	1	C0ABBB000123
IC51	NJM78L09UA	IC	1	C0CBAHC00002
IC52	NJM79L09UA	IC	1	C0CABBF00001
IC53	NJM4580ED	IC	1	C0ABBB000123
IC54	C0JBAR000242	IC	1	
IC55	NJM4580ED	IC	1	C0ABBB000123
IC56	AD7945BR	IC	1	
IC57	NJM4580ED	IC	1	C0ABBB000123
IC58	C0JBAR000242	IC	1	
IC59	NJM4580ED	IC	1	C0ABBB000123
IC91	NJM78L05UA	IC	1	C0CBADC00010
IC92	NJM79L05UA	IC	1	
IC101	NJM78L09UA	IC	1	C0CBAHC00002
IC102	NJM79L09UA	IC	1	C0CABBF00001
IC103	NJM4580ED	IC	1	C0ABBB000123
IC104	C0JBAR000242	IC	1	
IC105	NJM4580ED	IC	1	C0ABBB000123
IC106	AD7945BR	IC	1	
IC107	NJM4580ED	IC	1	C0ABBB000123
IC108	C0JBAR000242	IC	1	
IC109	NJM4580ED	IC	1	C0ABBB000123
IC151	NJM78L09UA	IC	1	C0CBAHC00002
IC152	NJM79L09UA	IC	1	C0CABBF00001
IC153	NJM4580ED	IC	1	C0ABBB000123
IC154	C0JBAR000242	IC	1	
IC155	NJM4580ED	IC	1	C0ABBB000123
IC156	AD7945BR	IC	1	
IC157	NJM4580ED	IC	1	C0ABBB000123
IC158	C0JBAR000242	IC	1	

Ref.No.	Part No.	Part Name & Description	Pcs	Remarks
IC159	NJM4580ED	IC	1	C0ABBB000123
IC201-04	NJM2100MD	IC	4	
IC205,06	AK5340VS	IC	2	
IC207,08	NJM78L05UA	IC	2	C0CBADC00010
IC209	MC74HC541AF	IC	1	
IC301,02	SN74S1051NS	IC	2	
IC303	74F245SJ	IC	1	C0JBCZ000183
IC304	74F541SJ	IC	1	C0JBCZ000190
IC305	TC7S04F	IC	1	C0JBAB000169
IC306	74AC139SJ	IC	1	
IC307,08	UPD71055GB	IC	2	
J1,J2	VJJ0378	M6 JACK	2	K2HB103B0019
JP1,P2	VJR1008	EARTH LUG	2	
L1-L4	VLP0147	COIL	4	
L201	VLQ0576	COIL	1	
L202	VLQ0163J100	COIL 10UH	1	
L203	VLQ0576	COIL	1	
L204	VLQ0163J100	COIL 10UH	1	
P1	VJP3454B096	CONNECTOR (MALE)	1	K1KA96B00021
P2	VJP1234T	CONNECTOR (MALE) 7P	1	K1KA07A00020
Q1	2SD1328	TRANSISTOR	1	
Q51	2SD1328	TRANSISTOR	1	
Q101	2SD1328	TRANSISTOR	1	
Q151	2SD1328	TRANSISTOR	1	
QR1	UN2213	TRANSISTOR-RESISTOR	1	
QR2	UN2113	TRANSISTOR-RESISTOR	1	
QR51	UN2213	TRANSISTOR-RESISTOR	1	
QR52	UN2113	TRANSISTOR-RESISTOR	1	
QR101	UN2213	TRANSISTOR-RESISTOR	1	
QR102	UN2113	TRANSISTOR-RESISTOR	1	
QR151	UN2213	TRANSISTOR-RESISTOR	1	
QR152	UN2113	TRANSISTOR-RESISTOR	1	
R1	ERJ12YJ621	M.RESISTOR CH 1/2W 620	1	
R2	ERJ6RBD223	M.RESISTOR CH 1/10W 22K	1	
R3,R4	ERJ6RBD473	M.RESISTOR CH 1/10W 47K	2	
R5,R6	ERJ6RBD123	M.RESISTOR CH 1/10W 12K	2	
R7,R8	ERJ6RBD333	M.RESISTOR CH 1/10W 33K	2	
R9,10	ERJ6RBD911	M.RESISTOR CH 1/10W 910	2	
R11,12	ERJ6RBD332	M.RESISTOR CH 1/10W 3.3K	2	
R13,14	ERJ6RBD202	M.RESISTOR CH 1/10W 2K	2	
R15,16	ERJ6RED470	M.RESISTOR CH 1/10W 47	2	
R17,18	ERJ6GEYJ335	M.RESISTOR CH 1/10W 3.3M	2	
R19-22	ERJ6RBD472	M.RESISTOR CH 1/10W 4.7K	4	
R23	ERJ6RED470	M.RESISTOR CH 1/10W 47	1	
R25	ERJ6GEYG103	M.RESISTOR CH 1/10W 10K	1	
R26	ERJ6GEYG182	M.RESISTOR CH 1/10W 1.8K	1	
R27	ERJ6GEYG103	M.RESISTOR CH 1/10W 10K	1	
R28	ERJ6RBD391	M.RESISTOR CH 1/10W 390	1	
R29	ERJ6RBD822	M.RESISTOR CH 1/10W 8.2K	1	
R30	ERJ6RBD682	M.RESISTOR CH 1/10W 6.8K	1	
R31	ERJ6RBD151	M.RESISTOR CH 1/10W 150	1	
R32	ERJ6RBD123	M.RESISTOR CH 1/10W 12K	1	
R33	ERJ6RBD202	M.RESISTOR CH 1/10W 2K	1	
R34	ERJ6RBD153	M.RESISTOR CH 1/10W 15K	1	
R35	ERJ6GEYG103	M.RESISTOR CH 1/10W 10K	1	
R36	ERJ6GEYG102	M.RESISTOR CH 1/10W 1K	1	
R37	ERJ6GEYG104	M.RESISTOR CH 1/10W 100K	1	
R38	ERJ6GEYG683	M.RESISTOR CH 1/10W 68K	1	
R39	ERJ6GEYG103	M.RESISTOR CH 1/10W 10K	1	
R40	ERJ6GEYG105	M.RESISTOR CH 1/10W 1M	1	
R41	ERJ6RBD102	M.RESISTOR CH 1/10W 1K	1	
R42	ERJ6RBD222	M.RESISTOR CH 1/10W 2.2K	1	
R43,44	ERJ6RBD153	M.RESISTOR CH 1/10W 15K	2	
R45	ERJ6GEYF472	M.RESISTOR CH 1/10W 4.7K	1	
R46	ERJ6GEYG103	M.RESISTOR CH 1/10W 10K	1	
R47-49	ERJ6RBD472	M.RESISTOR CH 1/10W 4.7K	3	
R50	ERJ6GEYG103	M.RESISTOR CH 1/10W 10K	1	
R51	ERJ12YJ621	M.RESISTOR CH 1/2W 620	1	

Ref.No.	Part No.	Part Name & Description	Pcs	Remarks
R52	ERJ6RBD223	M.RESISTOR CH 1/10W 22K	1	
R53,54	ERJ6RBD473	M.RESISTOR CH 1/10W 47K	2	
R55,56	ERJ6RBD123	M.RESISTOR CH 1/10W 12K	2	
R57,58	ERJ6RBD333	M.RESISTOR CH 1/10W 33K	2	
R59,60	ERJ6RBD911	M.RESISTOR CH 1/10W 910	2	
R61,62	ERJ6RBD332	M.RESISTOR CH 1/10W 3.3K	2	
R63,64	ERJ6RBD202	M.RESISTOR CH 1/10W 2K	2	
R65,66	ERJ6RED470	M.RESISTOR CH 1/10W 47	2	
R67,68	ERJ6GEYJ335	M.RESISTOR CH 1/10W 3.3M	2	
R69-72	ERJ6RBD472	M.RESISTOR CH 1/10W 4.7K	4	
R73	ERJ6RED470	M.RESISTOR CH 1/10W 47	1	
R75	ERJ6GEYG103	M.RESISTOR CH 1/10W 10K	1	
R76	ERJ6GEYG182	M.RESISTOR CH 1/10W 1.8K	1	
R77	ERJ6GEYG103	M.RESISTOR CH 1/10W 10K	1	
R78	ERJ6RBD391	M.RESISTOR CH 1/10W 390	1	
R79	ERJ6RBD822	M.RESISTOR CH 1/10W 8.2K	1	
R80	ERJ6RBD682	M.RESISTOR CH 1/10W 6.8K	1	
R81	ERJ6RBD151	M.RESISTOR CH 1/10W 150	1	
R82	ERJ6RBD123	M.RESISTOR CH 1/10W 12K	1	
R83	ERJ6RBD202	M.RESISTOR CH 1/10W 2K	1	
R84	ERJ6RBD153	M.RESISTOR CH 1/10W 15K	1	
R85	ERJ6GEYG103	M.RESISTOR CH 1/10W 10K	1	
R86	ERJ6GEYG102	M.RESISTOR CH 1/10W 1K	1	
R87	ERJ6GEYG104	M.RESISTOR CH 1/10W 100K	1	
R88	ERJ6GEYG683	M.RESISTOR CH 1/10W 68K	1	
R89	ERJ6GEYG103	M.RESISTOR CH 1/10W 10K	1	
R90	ERJ6GEYG105	M.RESISTOR CH 1/10W 1M	1	
R91	ERJ6RBD102	M.RESISTOR CH 1/10W 1K	1	
R92	ERJ6RBD222	M.RESISTOR CH 1/10W 2.2K	1	
R93,94	ERJ6RBD153	M.RESISTOR CH 1/10W 15K	2	
R95	ERJ6GEYF472	M.RESISTOR CH 1/10W 4.7K	1	
R96	ERJ6GEYG103	M.RESISTOR CH 1/10W 10K	1	
R97-99	ERJ6RBD472	M.RESISTOR CH 1/10W 4.7K	3	
R100	ERJ6GEYG103	M.RESISTOR CH 1/10W 10K	1	
R101	ERJ12YJ621	M.RESISTOR CH 1/2W 620	1	
R102	ERJ6RBD223	M.RESISTOR CH 1/10W 22K	1	
R103,04	ERJ6RBD473	M.RESISTOR CH 1/10W 47K	2	
R105,06	ERJ6RBD123	M.RESISTOR CH 1/10W 12K	2	
R107,08	ERJ6RBD333	M.RESISTOR CH 1/10W 33K	2	
R109,10	ERJ6RBD911	M.RESISTOR CH 1/10W 910	2	
R111,12	ERJ6RBD332	M.RESISTOR CH 1/10W 3.3K	2	
R113,14	ERJ6RBD202	M.RESISTOR CH 1/10W 2K	2	
R115,16	ERJ6RED470	M.RESISTOR CH 1/10W 47	2	
R117,18	ERJ6GEYJ335	M.RESISTOR CH 1/10W 3.3M	2	
R119-22	ERJ6RBD472	M.RESISTOR CH 1/10W 4.7K	4	
R123	ERJ6RED470	M.RESISTOR CH 1/10W 47	1	
R125	ERJ6GEYG103	M.RESISTOR CH 1/10W 10K	1	
R126	ERJ6GEYG182	M.RESISTOR CH 1/10W 1.8K	1	
R127	ERJ6GEYG103	M.RESISTOR CH 1/10W 10K	1	
R128	ERJ6RBD391	M.RESISTOR CH 1/10W 390	1	
R129	ERJ6RBD822	M.RESISTOR CH 1/10W 8.2K	1	
R130	ERJ6RBD682	M.RESISTOR CH 1/10W 6.8K	1	
R131	ERJ6RBD151	M.RESISTOR CH 1/10W 150	1	
R132	ERJ6RBD123	M.RESISTOR CH 1/10W 12K	1	
R133	ERJ6RBD202	M.RESISTOR CH 1/10W 2K	1	
R134	ERJ6RBD153	M.RESISTOR CH 1/10W 15K	1	
R135	ERJ6GEYG103	M.RESISTOR CH 1/10W 10K	1	
R136	ERJ6GEYG102	M.RESISTOR CH 1/10W 1K	1	
R137	ERJ6GEYG104	M.RESISTOR CH 1/10W 100K	1	
R138	ERJ6GEYG683	M.RESISTOR CH 1/10W 68K	1	
R139	ERJ6GEYG103	M.RESISTOR CH 1/10W 10K	1	
R140	ERJ6GEYG105	M.RESISTOR CH 1/10W 1M	1	
R141	ERJ6RBD102	M.RESISTOR CH 1/10W 1K	1	
R142	ERJ6RBD222	M.RESISTOR CH 1/10W 2.2K	1	
R143,44	ERJ6RBD153	M.RESISTOR CH 1/10W 15K	2	
R145	ERJ6GEYF472	M.RESISTOR CH 1/10W 4.7K	1	
R146	ERJ6GEYG103	M.RESISTOR CH 1/10W 10K	1	
R147-49	ERJ6RBD472	M.RESISTOR CH 1/10W 4.7K	3	
R150	ERJ6GEYG103	M.RESISTOR CH 1/10W 10K	1	
R151	ERJ12YJ621	M.RESISTOR CH 1/2W 620	1	
R152	ERJ6RBD223	M.RESISTOR CH 1/10W 22K	1	
R153,54	ERJ6RBD473	M.RESISTOR CH 1/10W 47K	2	
R155,56	ERJ6RBD123	M.RESISTOR CH 1/10W 12K	2	
R157,58	ERJ6RBD333	M.RESISTOR CH 1/10W 33K	2	
R159,60	ERJ6RBD911	M.RESISTOR CH 1/10W 910	2	

Ref.No.	Part No.	Part Name & Description	Pcs	Remarks
R161,62	ERJ6RBD332	M.RESISTOR CH 1/10W 3.3K	2	
R163,64	ERJ6RBD202	M.RESISTOR CH 1/10W 2K	2	
R165,66	ERJ6RED470	M.RESISTOR CH 1/10W 47	2	
R167,68	ERJ6GEYJ335	M.RESISTOR CH 1/10W 3.3M	2	
R169-72	ERJ6RBD472	M.RESISTOR CH 1/10W 4.7K	4	
R173	ERJ6RED470	M.RESISTOR CH 1/10W 47	1	
R175	ERJ6GEYG103	M.RESISTOR CH 1/10W 10K	1	
R176	ERJ6GEYG182	M.RESISTOR CH 1/10W 1.8K	1	
R177	ERJ6GEYG103	M.RESISTOR CH 1/10W 10K	1	
R178	ERJ6RBD391	M.RESISTOR CH 1/10W 390	1	
R179	ERJ6RBD822	M.RESISTOR CH 1/10W 8.2K	1	
R180	ERJ6RBD682	M.RESISTOR CH 1/10W 6.8K	1	
R181	ERJ6RBD151	M.RESISTOR CH 1/10W 150	1	
R182	ERJ6RBD123	M.RESISTOR CH 1/10W 12K	1	
R183	ERJ6RBD202	M.RESISTOR CH 1/10W 2K	1	
R184	ERJ6RBD153	M.RESISTOR CH 1/10W 15K	1	
R185	ERJ6GEYG103	M.RESISTOR CH 1/10W 10K	1	
R186	ERJ6GEYG102	M.RESISTOR CH 1/10W 1K	1	
R187	ERJ6GEYG104	M.RESISTOR CH 1/10W 100K	1	
R188	ERJ6GEYG683	M.RESISTOR CH 1/10W 68K	1	
R189	ERJ6GEYG103	M.RESISTOR CH 1/10W 10K	1	
R190	ERJ6GEYG105	M.RESISTOR CH 1/10W 1M	1	
R191	ERJ6RBD102	M.RESISTOR CH 1/10W 1K	1	
R192	ERJ6RBD222	M.RESISTOR CH 1/10W 2.2K	1	
R193,94	ERJ6RBD153	M.RESISTOR CH 1/10W 15K	2	
R195	ERJ6GEYF472	M.RESISTOR CH 1/10W 4.7K	1	
R196	ERJ6GEYG103	M.RESISTOR CH 1/10W 10K	1	
R197-99	ERJ6RBD472	M.RESISTOR CH 1/10W 4.7K	3	
R200	ERJ6GEYG103	M.RESISTOR CH 1/10W 10K	1	
R201	ERJ6GEYG331	M.RESISTOR CH 1/10W 330	1	
R202	ERJ6GEYG103	M.RESISTOR CH 1/10W 10K	1	
R203,04	ERJ6RBD103	M.RESISTOR CH 1/10W 10K	2	
R205	ERJ6GEYJ100	M.RESISTOR CH 1/10W 10	1	
R206,07	ERJ6RBD472	M.RESISTOR CH 1/10W 4.7K	2	
R208,09	ERJ6RBD103	M.RESISTOR CH 1/10W 10K	2	
R210,11	ERJ6RBD331	M.RESISTOR CH 1/10W 330	2	
R221	ERJ6GEYG331	M.RESISTOR CH 1/10W 330	1	
R222	ERJ6GEYG103	M.RESISTOR CH 1/10W 10K	1	
R223,24	ERJ6RBD103	M.RESISTOR CH 1/10W 10K	2	
R225	ERJ6GEYJ100	M.RESISTOR CH 1/10W 10	1	
R226,27	ERJ6RBD472	M.RESISTOR CH 1/10W 4.7K	2	
R228,29	ERJ6RBD103	M.RESISTOR CH 1/10W 10K	2	
R230,31	ERJ6RBD331	M.RESISTOR CH 1/10W 330	2	
R244-48	ERJ6GEY0R00	M.RESISTOR CH 1/10W 0	5	
R251	ERJ6GEYG331	M.RESISTOR CH 1/10W 330	1	
R252	ERJ6GEYG103	M.RESISTOR CH 1/10W 10K	1	
R253,54	ERJ6RBD103	M.RESISTOR CH 1/10W 10K	2	
R255	ERJ6GEYJ100	M.RESISTOR CH 1/10W 10	1	
R256,57	ERJ6RBD472	M.RESISTOR CH 1/10W 4.7K	2	
R258,59	ERJ6RBD103	M.RESISTOR CH 1/10W 10K	2	
R260,61	ERJ6RBD331	M.RESISTOR CH 1/10W 330	2	
R271	ERJ6GEYG331	M.RESISTOR CH 1/10W 330	1	
R272	ERJ6GEYG103	M.RESISTOR CH 1/10W 10K	1	
R273,74	ERJ6RBD103	M.RESISTOR CH 1/10W 10K	2	
R275	ERJ6GEYJ100	M.RESISTOR CH 1/10W 10	1	
R276,77	ERJ6RBD472	M.RESISTOR CH 1/10W 4.7K	2	
R278,79	ERJ6RBD103	M.RESISTOR CH 1/10W 10K	2	
R280,81	ERJ6RBD331	M.RESISTOR CH 1/10W 330	2	
R294-98	ERJ6GEY0R00	M.RESISTOR CH 1/10W 0	5	
R301-06	ERJ6GEYG103	M.RESISTOR CH 1/10W 10K	6	
SW1	VSS0126	SWITCH	1	
SW51	VSS0126	SWITCH	1	
SW101	VSS0126	SWITCH	1	
SW151	VSS0126	SWITCH	1	
TG201	VJR0646	TEST POINT	1	D0X0R0000022
TG203	VJR0646	TEST POINT	1	D0X0R0000022
TP201-07	VJR0646	TEST POINT	7	D0X0R0000022
VR1	EVMEASA00B12	V.RESISTOR 10	1	
VR2	EVMEGSA00B14	V.RESISTOR 10K	1	
VR51	EVMEASA00B12	V.RESISTOR 10	1	
VR52	EVMEGSA00B14	V.RESISTOR 10K	1	

Ref.No.	Part No.	Part Name & Description	Pcs	Remarks
VR101	EVMEASA00B12	V.RESISTOR 10	1	
VR102	EVMEGSA00B14	V.RESISTOR 10K	1	
VR151	EVMEASA00B12	V.RESISTOR 10	1	
VR152	EVMEGSA00B14	V.RESISTOR 10K	1	
		MISCELLANEOUS		
	VML2143	CARD PULLER	1	
	VML2144	CARD PULLER	1	
	VMP5137	HEAD PHONE GND ANGLE	1	
	VMP6692	HP/MIC ANGLE	1	
	XTV3+6F	SCREW	2	
■ E14	VEP85189A	HEAD BUFF 1 P.C.BOARD	1	(RTL)
C5101,02	ECUX1C104KBV	C.CAPACITOR CH 16V 0.1U	2	
C5103	F1L1E4750006	C.CAPACITOR 25V 4.7U	1	
C5104	ECUX1C104KBV	C.CAPACITOR CH 16V 0.1U	1	
C5105	F1L1E4750006	C.CAPACITOR 25V 4.7U	1	
C5106	ECUX1C104KBV	C.CAPACITOR CH 16V 0.1U	1	
C5107	F1L1E4750006	C.CAPACITOR 25V 4.7U	1	
C5108-11	ECUX1C104KBV	C.CAPACITOR CH 16V 0.1U	4	
C5112	F1L1E4750006	C.CAPACITOR 25V 4.7U	1	
C5113-16	ECUX1C104KBV	C.CAPACITOR CH 16V 0.1U	4	
C5117-24	ECUX1H010CCV	C.CAPACITOR CH 50V 1P	8	
C5125-30	ECUX1C104KBV	C.CAPACITOR CH 16V 0.1U	6	
C5131-34	ECUX1A105KBN	C.CAPACITOR CH 10V 1U	4	
C5135-46	ECUX1C104KBV	C.CAPACITOR CH 16V 0.1U	12	
C5147,48	F1L1E4750006	C.CAPACITOR 25V 4.7U	2	
C5149,50	ECUX1C104KBV	C.CAPACITOR CH 16V 0.1U	2	
C5201,02	ECUX1C104KBV	C.CAPACITOR CH 16V 0.1U	2	
C5203,04	F1L1E4750006	C.CAPACITOR 25V 4.7U	2	
C5205-14	ECUX1C104KBV	C.CAPACITOR CH 16V 0.1U	10	
C5215,16	F1L1E4750006	C.CAPACITOR 25V 4.7U	2	
C5217-24	ECUX1H010CCV	C.CAPACITOR CH 50V 1P	8	
C5225-30	ECUX1C104KBV	C.CAPACITOR CH 16V 0.1U	6	
C5231-34	ECUX1A105KBN	C.CAPACITOR CH 10V 1U	4	
C5235-41	ECUX1C104KBV	C.CAPACITOR CH 16V 0.1U	7	
C5242	F1L1E4750006	C.CAPACITOR 25V 4.7U	1	
C5243-46	ECUX1C104KBV	C.CAPACITOR CH 16V 0.1U	4	
C5247,48	ECUX1H121JCV	C.CAPACITOR CH 50V 120P	2	
C5301,02	ECUX1C104KBV	C.CAPACITOR CH 16V 0.1U	2	
C5303	F1L1E4750006	C.CAPACITOR 25V 4.7U	1	
C5304	ECUX1C104KBV	C.CAPACITOR CH 16V 0.1U	1	
C5305	F1L1E4750006	C.CAPACITOR 25V 4.7U	1	
C5306,07	ECUX1C104KBV	C.CAPACITOR CH 16V 0.1U	2	
C5308	F1L1E4750006	C.CAPACITOR 25V 4.7U	1	
C5309-11	ECUX1C104KBV	C.CAPACITOR CH 16V 0.1U	3	
C5312	F1L1E4750006	C.CAPACITOR 25V 4.7U	1	
C5313-16	ECUX1C104KBV	C.CAPACITOR CH 16V 0.1U	4	
C5317-24	ECUX1H010CCV	C.CAPACITOR CH 50V 1P	8	
C5325-30	ECUX1C104KBV	C.CAPACITOR CH 16V 0.1U	6	
C5331-34	ECUX1A105KBN	C.CAPACITOR CH 10V 1U	4	
C5335-41	ECUX1C104KBV	C.CAPACITOR CH 16V 0.1U	7	
C5342	F1L1E4750006	C.CAPACITOR 25V 4.7U	1	
C5343-46	ECUX1C104KBV	C.CAPACITOR CH 16V 0.1U	4	
C5347,48	ECUX1H121JCV	C.CAPACITOR CH 50V 120P	2	
C5401-07	ECUX1C104KBV	C.CAPACITOR CH 16V 0.1U	7	
C5409	ECUX1H820JCV	C.CAPACITOR CH 50V 82P	1	
C5410,11	ECUX1C104KBV	C.CAPACITOR CH 16V 0.1U	2	
C5413	ECUX1H820JCV	C.CAPACITOR CH 50V 82P	1	
C5414-26	ECUX1C104KBV	C.CAPACITOR CH 16V 0.1U	13	
C5427-30	F1L1E4750006	C.CAPACITOR 25V 4.7U	4	
C5431-37	ECUX1C104KBV	C.CAPACITOR CH 16V 0.1U	7	
C5439-41	ECUX1C104KBV	C.CAPACITOR CH 16V 0.1U	3	
C5443-47	ECUX1C104KBV	C.CAPACITOR CH 16V 0.1U	5	
C5448	ECUX1H820JCV	C.CAPACITOR CH 50V 82P	1	
C5449	ECUX1C104KBV	C.CAPACITOR CH 16V 0.1U	1	
C5450	F1L1E4750006	C.CAPACITOR 25V 4.7U	1	
C5451-54	ECUX1C104KBV	C.CAPACITOR CH 16V 0.1U	4	

Ref.No.	Part No.	Part Name & Description	Pcs	Remarks
C5455	ECUX1H820JCV	C.CAPACITOR CH 50V 82P	1	
C5456	ECUX1C104KBV	C.CAPACITOR CH 16V 0.1U	1	
C5457	F1L1E4750006	C.CAPACITOR 25V 4.7U	1	
C5458-62	ECUX1C104KBV	C.CAPACITOR CH 16V 0.1U	5	
C5463-66	F1L1E4750006	C.CAPACITOR 25V 4.7U	4	
C5467-70	ECUX1C104KBV	C.CAPACITOR CH 16V 0.1U	4	
C5601-04	ECUX1H181JCV	C.CAPACITOR CH 50V 180P	4	
C5606	ECUX1H100DCV	C.CAPACITOR CH 50V 10P	1	
C5607,08	ECUX1H050CCV	C.CAPACITOR CH 50V 5P	2	
C5610	ECUX1H100DCV	C.CAPACITOR CH 50V 10P	1	
C5611,12	ECUX1H050CCV	C.CAPACITOR CH 50V 5P	2	
C5614	ECUX1H100DCV	C.CAPACITOR CH 50V 10P	1	
C5615,16	ECUX1H050CCV	C.CAPACITOR CH 50V 5P	2	
C5618	ECUX1H100DCV	C.CAPACITOR CH 50V 10P	1	
C5619,20	ECUX1H050CCV	C.CAPACITOR CH 50V 5P	2	
C5901-04	EEVHB1C470	E.CAPACITOR 16V 47U	4	
C5905-09	ECUX1C104KBV	C.CAPACITOR CH 16V 0.1U	5	
C5910	F1L1E4750006	C.CAPACITOR 25V 4.7U	1	
C5911	ECUX1C104KBV	C.CAPACITOR CH 16V 0.1U	1	
C5912	F1L1E4750006	C.CAPACITOR 25V 4.7U	1	
C5913,14	ECUX1C104KBV	C.CAPACITOR CH 16V 0.1U	2	
C5915,16	F1L1E4750006	C.CAPACITOR 25V 4.7U	2	
D5001-04	MA704A	DIODE	4	
D5201-03	MA704A	DIODE	3	
D5301-03	MA704A	DIODE	3	
D5401,02	MA142K	DIODE	2	
D5403-06	MA132WK	DIODE	4	
D5407,08	MA142K	DIODE	2	
D5409-12	MA132WK	DIODE	4	
FL5901-04	VLF0931	FILTER	4	F1Y2A1030001
IC5101,02	XC62AP5002P	IC	2	
IC5103,04	UPC5102GS030	IC	2	C1ZBZ0001316
IC5105,06	XC62DN5002P	IC	2	
IC5201,02	XC62AP5002P	IC	2	
IC5203,04	UPC5102GS030	IC	2	C1ZBZ0001316
IC5205,06	TC4S30F	IC	2	C0JBAZ000429
IC5207	XC62DN5002P	IC	1	
IC5301,02	XC62AP5002P	IC	2	
IC5303,04	UPC5102GS030	IC	2	C1ZBZ0001316
IC5305,06	TC4S30F	IC	2	C0JBAZ000429
IC5307	XC62DN5002P	IC	1	
IC5401-08	TC4S30F	IC	8	C0JBAZ000429
IC5409,10	XC62DN5002P	IC	2	
J1-J3	VJR1095	LUG TERMINAL	3	
L5601-08	VLQ0163J100	COIL 10UH	8	
P5001	VJP3862F080	CONNECTOR (MALE)	1	K1KA80B00024
P5002	VJP3978E140A	CONNECTOR (MALE)	1	K1KAE0A00009
P5003,04	VJS3900C013	CONNECTOR (FEMALE)	2	K1MN13A00023
P5005	VJS3900A024	CONNECTOR (FEMALE)	1	
Q5101-08	XP0553100L	TRANSISTOR-RESISTOR	8	
Q5201,02	XP1504	TRANSISTOR-RESISTOR	2	
Q5203,04	XP0553100L	TRANSISTOR-RESISTOR	2	
Q5205	XP6435	TRANSISTOR-RESISTOR	1	
Q5301,02	XP1504	TRANSISTOR-RESISTOR	2	
Q5303,04	XP0553100L	TRANSISTOR-RESISTOR	2	
Q5305	XP6435	TRANSISTOR-RESISTOR	1	
Q5401,02	XN5531	TRANSISTOR-RESISTOR	2	
Q5403	2SA1462Y34	TRANSISTOR	1	
Q5404	XN6537	TRANSISTOR-RESISTOR	1	
Q5405	2SC3735B35	TRANSISTOR	1	
Q5406	2SA1462Y34	TRANSISTOR	1	
Q5407	XN6537	TRANSISTOR-RESISTOR	1	
Q5408	2SC3735B35	TRANSISTOR	1	
Q5409,10	2SA1462Y34	TRANSISTOR	2	
Q5411	2SC3735B35	TRANSISTOR	1	
Q5412,13	2SA1462Y34	TRANSISTOR	2	
Q5414	2SC3735B35	TRANSISTOR	1	
Q5415	XP1504	TRANSISTOR-RESISTOR	1	

Ref.No.	Part No.	Part Name & Description	Pcs	Remarks
Q5416	2SA1462Y34	TRANSISTOR	1	
Q5417	2SC3735B35	TRANSISTOR	1	
Q5418	XP1504	TRANSISTOR-RESISTOR	1	
Q5419	2SA1462Y34	TRANSISTOR	1	
Q5420	2SC3735B35	TRANSISTOR	1	
Q5421,22	XP1504	TRANSISTOR-RESISTOR	2	
Q5423,24	XN5531	TRANSISTOR-RESISTOR	2	
Q5425	XN6537	TRANSISTOR-RESISTOR	1	
Q5426	2SC3735B35	TRANSISTOR	1	
Q5427	XN6537	TRANSISTOR-RESISTOR	1	
Q5428	2SC3735B35	TRANSISTOR	1	
Q5429-32	2SA1462Y34	TRANSISTOR	4	
Q5433	XP1504	TRANSISTOR-RESISTOR	1	
Q5434,35	2SA1462Y34	TRANSISTOR	2	
Q5436,37	2SC3735B35	TRANSISTOR	2	
Q5438	XP1504	TRANSISTOR-RESISTOR	1	
Q5439,40	2SA1462Y34	TRANSISTOR	2	
Q5441,42	2SC3735B35	TRANSISTOR	2	
Q5443,44	XP1504	TRANSISTOR-RESISTOR	2	
Q5601-08	2SC3735	TRANSISTOR	8	
QR5401-08	UN5111	TRANSISTOR-RESISTOR	8	
R5101-08	ERJ3GEYJ333	M.RESISTOR CH 1/16W 33K	8	
R5109,10	ERJ3GEYJ100	M.RESISTOR CH 1/16W 10	2	
R5111-14	ERJ3GEYJ101	M.RESISTOR CH 1/16W 100	4	
R5115	ERJ3GEYJ330	M.RESISTOR CH 1/16W 33	1	
R5116,17	ERJ3GEYJ470	M.RESISTOR CH 1/16W 47	2	
R5118,19	ERJ3RBD331	M.RESISTOR CH 1/16W 330	2	
R5120	ERJ3GEYJ330	M.RESISTOR CH 1/16W 33	1	
R5121,22	ERJ3GEYJ470	M.RESISTOR CH 1/16W 47	2	
R5123,24	ERJ3RBD331	M.RESISTOR CH 1/16W 330	2	
R5125	ERJ3GEYJ330	M.RESISTOR CH 1/16W 33	1	
R5126,27	ERJ3GEYJ470	M.RESISTOR CH 1/16W 47	2	
R5128,29	ERJ3RBD331	M.RESISTOR CH 1/16W 330	2	
R5130	ERJ3GEYJ330	M.RESISTOR CH 1/16W 33	1	
R5131,32	ERJ3GEYJ470	M.RESISTOR CH 1/16W 47	2	
R5133,34	ERJ3RBD331	M.RESISTOR CH 1/16W 330	2	
R5135	ERJ3GEYJ330	M.RESISTOR CH 1/16W 33	1	
R5136,37	ERJ3GEYJ470	M.RESISTOR CH 1/16W 47	2	
R5138,39	ERJ3GEYJ330	M.RESISTOR CH 1/16W 33	2	
R5140,41	ERJ3RBD562	M.RESISTOR CH 1/16W 5.6K	2	
R5142,43	ERJ3GEYJ330	M.RESISTOR CH 1/16W 33	2	
R5144	ERJ3RBD562	M.RESISTOR CH 1/16W 5.6K	1	
R5145,46	ERJ3GEYJ470	M.RESISTOR CH 1/16W 47	2	
R5147	ERJ3GEYJ330	M.RESISTOR CH 1/16W 33	1	
R5148	ERJ3RBD562	M.RESISTOR CH 1/16W 5.6K	1	
R5149	ERJ3GEYJ330	M.RESISTOR CH 1/16W 33	1	
R5150	ERJ3RBD562	M.RESISTOR CH 1/16W 5.6K	1	
R5151,52	ERJ3GEYJ470	M.RESISTOR CH 1/16W 47	2	
R5153,54	ERJ3GEYJ330	M.RESISTOR CH 1/16W 33	2	
R5155	ERJ3RBD562	M.RESISTOR CH 1/16W 5.6K	1	
R5156-58	ERJ3GEYJ330	M.RESISTOR CH 1/16W 33	3	
R5159	ERJ3RBD562	M.RESISTOR CH 1/16W 5.6K	1	
R5160,61	ERJ3GEYJ470	M.RESISTOR CH 1/16W 47	2	
R5162	ERJ3RBD562	M.RESISTOR CH 1/16W 5.6K	1	
R5201-08	ERJ3GEYJ333	M.RESISTOR CH 1/16W 33K	8	
R5209,10	ERJ3GEYJ100	M.RESISTOR CH 1/16W 10	2	
R5211,12	ERJ3GEYJ101	M.RESISTOR CH 1/16W 100	2	
R5213-16	ERJ3GEYJ103	M.RESISTOR CH 1/16W 10K	4	
R5217,18	ERJ3GEYJ470	M.RESISTOR CH 1/16W 47	2	
R5219	ERJ3RBD331	M.RESISTOR CH 1/16W 330	1	
R5220	ERJ3GEYJ330	M.RESISTOR CH 1/16W 33	1	
R5221	ERJ3RBD331	M.RESISTOR CH 1/16W 330	1	
R5222-24	ERJ3GEYJ330	M.RESISTOR CH 1/16W 33	3	
R5225,26	ERJ3RBD562	M.RESISTOR CH 1/16W 5.6K	2	
R5227,28	ERJ3GEYJ103	M.RESISTOR CH 1/16W 10K	2	
R5229,30	ERJ3GEYJ470	M.RESISTOR CH 1/16W 47	2	
R5231,32	ERJ3GEYJ103	M.RESISTOR CH 1/16W 10K	2	
R5233-36	ERJ3GEYJ123	M.RESISTOR CH 1/16W 12K	4	
R5237-40	ERJ3GEYJ103	M.RESISTOR CH 1/16W 10K	4	
R5301-08	ERJ3GEYJ333	M.RESISTOR CH 1/16W 33K	8	
R5309,10	ERJ3GEYJ100	M.RESISTOR CH 1/16W 10	2	
R5311,12	ERJ3GEYJ101	M.RESISTOR CH 1/16W 100	2	
R5313-16	ERJ3GEYJ103	M.RESISTOR CH 1/16W 10K	4	

Ref.No.	Part No.	Part Name & Description	Pcs	Remarks
R5317,18	ERJ3GEYJ470	M.RESISTOR CH 1/16W 47	2	
R5319	ERJ3GEYJ330	M.RESISTOR CH 1/16W 33	1	
R5320,21	ERJ3RBD331	M.RESISTOR CH 1/16W 330	2	
R5322-24	ERJ3GEYJ330	M.RESISTOR CH 1/16W 33	3	
R5325	ERJ3RBD562	M.RESISTOR CH 1/16W 5.6K	1	
R5326,27	ERJ3GEYJ470	M.RESISTOR CH 1/16W 47	2	
R5328	ERJ3RBD562	M.RESISTOR CH 1/16W 5.6K	1	
R5329,30	ERJ3GEYJ103	M.RESISTOR CH 1/16W 10K	2	
R5331	ERJ3GEYJ123	M.RESISTOR CH 1/16W 12K	1	
R5332,33	ERJ3GEYJ103	M.RESISTOR CH 1/16W 10K	2	
R5334-36	ERJ3GEYJ123	M.RESISTOR CH 1/16W 12K	3	
R5337-40	ERJ3GEYJ103	M.RESISTOR CH 1/16W 10K	4	
R5401	ERJ3GEYJ330	M.RESISTOR CH 1/16W 33	1	
R5402,03	ERJ3GEYG102	M.RESISTOR CH 1/16W 1K	2	
R5404,05	ERJ3GEYJ470	M.RESISTOR CH 1/16W 47	2	
R5406	ERJ3GEYJ330	M.RESISTOR CH 1/16W 33	1	
R5407,08	ERJ3GEYG102	M.RESISTOR CH 1/16W 1K	2	
R5409,10	ERJ3GEYJ470	M.RESISTOR CH 1/16W 47	2	
R5411	ERJ3GEYJ103	M.RESISTOR CH 1/16W 10K	1	
R5412	ERJ3GEYJ330	M.RESISTOR CH 1/16W 33	1	
R5413,14	ERJ3GEYJ562	M.RESISTOR CH 1/16W 5.6K	2	
R5415,16	ERJ3GEYJ470	M.RESISTOR CH 1/16W 47	2	
R5417	ERJ3RBD822	M.RESISTOR CH 1/16W 8.2K	1	
R5418	ERJ3RBD561	M.RESISTOR CH 1/16W 560	1	
R5419	ERJ3GEYJ103	M.RESISTOR CH 1/16W 10K	1	
R5420	ERJ3GEYJ330	M.RESISTOR CH 1/16W 33	1	
R5421,22	ERJ3GEYJ562	M.RESISTOR CH 1/16W 5.6K	2	
R5423,24	ERJ3GEYJ470	M.RESISTOR CH 1/16W 47	2	
R5425	ERJ3RBD822	M.RESISTOR CH 1/16W 8.2K	1	
R5426	ERJ3RBD561	M.RESISTOR CH 1/16W 560	1	
R5427,28	ERJ3GEYJ103	M.RESISTOR CH 1/16W 10K	2	
R5429	ERJ3RED390	M.RESISTOR CH 1/16W 39	1	
R5430,31	ERJ3RBD271	M.RESISTOR CH 1/16W 270	2	
R5432	ERJ6RBD151	M.RESISTOR CH 1/10W 150	1	
R5433,34	ERJ3GEY0R00	M.RESISTOR CH 1/16W 0	2	
R5435	ERJ6RBD151	M.RESISTOR CH 1/10W 150	1	
R5436,37	ERJ3RED220	M.RESISTOR CH 1/16W 22	2	
R5438	ERJ3RED100	M.RESISTOR CH 1/16W 10	1	
R5439	ERJ3RED390	M.RESISTOR CH 1/16W 39	1	
R5440,41	ERJ3GEYJ103	M.RESISTOR CH 1/16W 10K	2	
R5442	ERJ3RED390	M.RESISTOR CH 1/16W 39	1	
R5443,44	ERJ3RBD271	M.RESISTOR CH 1/16W 270	2	
R5445,46	ERJ3GEY0R00	M.RESISTOR CH 1/16W 0	2	
R5447	ERJ6RBD151	M.RESISTOR CH 1/10W 150	1	
R5448	ERJ3RED100	M.RESISTOR CH 1/16W 10	1	
R5449	ERJ6RBD151	M.RESISTOR CH 1/10W 150	1	
R5450	ERJ3RED220	M.RESISTOR CH 1/16W 22	1	
R5451	ERJ3RED390	M.RESISTOR CH 1/16W 39	1	
R5452	ERJ3RED220	M.RESISTOR CH 1/16W 22	1	
R5453-56	ERJ3GEYG472	M.RESISTOR CH 1/16W 4.7K	4	
R5457	ERJ6RBD151	M.RESISTOR CH 1/10W 150	1	
R5458	ERJ6RED220	M.RESISTOR CH 1/10W 22	1	
R5459	ERJ6RBD151	M.RESISTOR CH 1/10W 150	1	
R5460	ERJ6RED220	M.RESISTOR CH 1/10W 22	1	
R5461-64	ERJ3GEYG472	M.RESISTOR CH 1/16W 4.7K	4	
R5465	ERJ6RBD151	M.RESISTOR CH 1/10W 150	1	
R5466	ERJ6RED220	M.RESISTOR CH 1/10W 22	1	
R5467	ERJ6RBD151	M.RESISTOR CH 1/10W 150	1	
R5468	ERJ6RED220	M.RESISTOR CH 1/10W 22	1	
R5469,70	ERJ3RBD222	M.RESISTOR CH 1/16W 2.2K	2	
R5471,72	ERJ6RED220	M.RESISTOR CH 1/10W 22	2	
R5473	ERJ14YJ151	M.RESISTOR CH 1/4W 150	1	
R5474,75	ERJ3RBD222	M.RESISTOR CH 1/16W 2.2K	2	
R5476,77	ERJ6RED220	M.RESISTOR CH 1/10W 22	2	
R5478-80	ERJ14YJ151	M.RESISTOR CH 1/4W 150	3	
R5481-84	ERJ3GEYG102	M.RESISTOR CH 1/16W 1K	4	
R5485,86	ERJ3GEYJ330	M.RESISTOR CH 1/16W 33	2	
R5487,88	ERJ3GEYJ470	M.RESISTOR CH 1/16W 47	2	
R5489,90	ERJ3GEYJ562	M.RESISTOR CH 1/16W 5.6K	2	
R5491,92	ERJ3GEYJ330	M.RESISTOR CH 1/16W 33	2	
R5493,94	ERJ3GEYJ470	M.RESISTOR CH 1/16W 47	2	
R5495,96	ERJ3GEYJ562	M.RESISTOR CH 1/16W 5.6K	2	
R5497-99	ERJ3GEYJ103	M.RESISTOR CH 1/16W 10K	3	
R5500	ERJ3RED390	M.RESISTOR CH 1/16W 39	1	
R5501,02	ERJ3RBD271	M.RESISTOR CH 1/16W 270	2	

Ref.No.	Part No.	Part Name & Description	Pcs	Remarks
R5503,04	ERJ3GEYJ470	M.RESISTOR CH 1/16W 47	2	
R5505	ERJ3RBD822	M.RESISTOR CH 1/16W 8.2K	1	
R5506,07	ERJ3RED220	M.RESISTOR CH 1/16W 22	2	
R5508	ERJ3RED100	M.RESISTOR CH 1/16W 10	1	
R5509	ERJ3RBD561	M.RESISTOR CH 1/16W 560	1	
R5510	ERJ3RED390	M.RESISTOR CH 1/16W 39	1	
R5511-13	ERJ3GEYJ103	M.RESISTOR CH 1/16W 10K	3	
R5514	ERJ3RED390	M.RESISTOR CH 1/16W 39	1	
R5515,16	ERJ3RBD271	M.RESISTOR CH 1/16W 270	2	
R5517,18	ERJ3GEYJ470	M.RESISTOR CH 1/16W 47	2	
R5519	ERJ3RED100	M.RESISTOR CH 1/16W 10	1	
R5520	ERJ3RBD822	M.RESISTOR CH 1/16W 8.2K	1	
R5521	ERJ3RBD561	M.RESISTOR CH 1/16W 560	1	
R5522	ERJ3RED220	M.RESISTOR CH 1/16W 22	1	
R5523	ERJ3RED390	M.RESISTOR CH 1/16W 39	1	
R5524	ERJ3RED220	M.RESISTOR CH 1/16W 22	1	
R5525-28	ERJ3GEYG472	M.RESISTOR CH 1/16W 4.7K	4	
R5529,30	ERJ6RBD151	M.RESISTOR CH 1/10W 150	2	
R5531,32	ERJ3GEY0R00	M.RESISTOR CH 1/16W 0	2	
R5533,34	ERJ6RBD151	M.RESISTOR CH 1/10W 150	2	
R5535-38	ERJ3GEYG472	M.RESISTOR CH 1/16W 4.7K	4	
R5539,40	ERJ3GEY0R00	M.RESISTOR CH 1/16W 0	2	
R5541-44	ERJ6RBD151	M.RESISTOR CH 1/10W 150	4	
R5545-52	ERJ6RED220	M.RESISTOR CH 1/10W 22	8	
R5553,54	ERJ3RBD222	M.RESISTOR CH 1/16W 2.2K	2	
R5555,56	ERJ14YJ151	M.RESISTOR CH 1/4W 150	2	
R5557,58	ERJ3RBD222	M.RESISTOR CH 1/16W 2.2K	2	
R5559,60	ERJ14YJ151	M.RESISTOR CH 1/4W 150	2	
R5601-04	ERJ3GEYJ100	M.RESISTOR CH 1/16W 10	4	
R5605	ERJ3GEYJ392	M.RESISTOR CH 1/16W 3.9K	1	
R5606	ERJ3GEYJ122	M.RESISTOR CH 1/16W 1.2K	1	
R5607	ERJ8GEYJ100	M.RESISTOR CH 1/8W 10	1	
R5608	ERJ8GEYJ270	M.RESISTOR CH 1/8W 27	1	
R5609	ERJ3GEYJ392	M.RESISTOR CH 1/16W 3.9K	1	
R5610	ERJ8GEYJ100	M.RESISTOR CH 1/8W 10	1	
R5611	ERJ3GEYJ122	M.RESISTOR CH 1/16W 1.2K	1	
R5612	ERJ8GEYJ270	M.RESISTOR CH 1/8W 27	1	
R5613	ERJ3GEYJ392	M.RESISTOR CH 1/16W 3.9K	1	
R5614	ERJ8GEYJ100	M.RESISTOR CH 1/8W 10	1	
R5615	ERJ3GEYJ122	M.RESISTOR CH 1/16W 1.2K	1	
R5616	ERJ8GEYJ270	M.RESISTOR CH 1/8W 27	1	
R5617	ERJ3GEYJ392	M.RESISTOR CH 1/16W 3.9K	1	
R5618	ERJ8GEYJ100	M.RESISTOR CH 1/8W 10	1	
R5619	ERJ3GEYJ122	M.RESISTOR CH 1/16W 1.2K	1	
R5620	ERJ8GEYJ270	M.RESISTOR CH 1/8W 27	1	
R5621	ERJ3GEYJ392	M.RESISTOR CH 1/16W 3.9K	1	
R5622	ERJ8GEYJ100	M.RESISTOR CH 1/8W 10	1	
R5623	ERJ3GEYJ122	M.RESISTOR CH 1/16W 1.2K	1	
R5624	ERJ8GEYJ100	M.RESISTOR CH 1/8W 10	1	
R5625	ERJ3GEYJ392	M.RESISTOR CH 1/16W 3.9K	1	
R5626	ERJ3GEYJ122	M.RESISTOR CH 1/16W 1.2K	1	
R5627	ERJ8GEYJ100	M.RESISTOR CH 1/8W 10	1	
R5628	ERJ3GEYJ392	M.RESISTOR CH 1/16W 3.9K	1	
R5629	ERJ3GEYJ122	M.RESISTOR CH 1/16W 1.2K	1	
R5630	ERJ8GEYJ100	M.RESISTOR CH 1/8W 10	1	
R5631	ERJ3GEYJ392	M.RESISTOR CH 1/16W 3.9K	1	
R5632	ERJ3GEYJ122	M.RESISTOR CH 1/16W 1.2K	1	
TP5401-04	EYF6CU	TEST POINT	4	
TP5601-04	EYF6CU	TEST POINT	4	
		MISCELLANEOUS		
	VYQ1906	RF SHIELD CASE (TOP)	1	
	VSC4933	SHILD HOLDER ANGLE	1	
	VSC5040	HEAD BUFF SHIELD (UPPER)	1	
	VSC4928	EARTH FINGER	1	
	XSN26+3	SCREW	1	
	VSC5041	HEAD BUFF SHIELD (MIDDLE)	1	
	VSC5042	P.C.BOARD SHIELD (LOWER)	1	
	VMZ3026	SHIELD PROTECT SHEET	1	
	VEE9862	EARTH CABLE	1	
	XNG2EFZ	NUT	2	
	XYN2+C8FZ	SCREW	2	
	VSC4705	SHIELD CASE (A)	1	

Ref.No.	Part No.	Part Name & Description	Pcs	Remarks
	VSC4706	SHIELD CASE (B)	1	
	XYN3+K6RS	SCREW	6	
	VMS4992	PIN	3	
	VSC5175	RF SHIELD PLATE	1	
■ E15	VEP85190A	HEAD BUFF 2 P.C.BOARD	1	(RTL)
C5101-13	ECUX1C104KBV	C.CAPACITOR CH 16V 0.1U	13	
C5114	F1L1E4750006	C.CAPACITOR 25V 4.7U	1	
C5115-17	ECUX1C104KBV	C.CAPACITOR CH 16V 0.1U	3	
C5118,19	ECUX1H560JCV	C.CAPACITOR CH 50V 56P	2	
C5120	ECUX1H822KBV	C.CAPACITOR CH 50V 8200P	1	
C5121,22	ECUX1C104KBV	C.CAPACITOR CH 16V 0.1U	2	
C5123,24	ECUX1H560JCV	C.CAPACITOR CH 50V 56P	2	
C5125	ECUX1H822KBV	C.CAPACITOR CH 50V 8200P	1	
C5126-30	ECUX1C104KBV	C.CAPACITOR CH 16V 0.1U	5	
C5131,32	ECUX1A105KBN	C.CAPACITOR CH 10V 1U	2	
C5133	ECUX1C104KBV	C.CAPACITOR CH 16V 0.1U	1	
C5134	ECUX1A105KBN	C.CAPACITOR CH 10V 1U	1	
C5135	ECUX1C104KBV	C.CAPACITOR CH 16V 0.1U	1	
C5136	ECUX1A105KBN	C.CAPACITOR CH 10V 1U	1	
C5137,38	ECUX1C104KBV	C.CAPACITOR CH 16V 0.1U	2	
C5139	ECUX1H180JCV	C.CAPACITOR CH 50V 18P	1	
C5140,41	ECUX1C104KBV	C.CAPACITOR CH 16V 0.1U	2	
C5142	ECUX1H180JCV	C.CAPACITOR CH 50V 18P	1	
C5143,44	ECUX1H070DCV	C.CAPACITOR CH 50V 7P	2	ECUV1H070DCV
C5145-47	ECUX1C104KBV	C.CAPACITOR CH 16V 0.1U	3	
C5148	ECUX1H102KBV	C.CAPACITOR CH 50V 1000P	1	F1H1H102A009
C5149-51	ECUX1C104KBV	C.CAPACITOR CH 16V 0.1U	3	
C5152	ECUX1H102KBV	C.CAPACITOR CH 50V 1000P	1	F1H1H102A009
C5153-55	ECUX1C104KBV	C.CAPACITOR CH 16V 0.1U	3	
C5156,57	ECUX1A105KBN	C.CAPACITOR CH 10V 1U	2	
C5158-61	ECUX1C104KBV	C.CAPACITOR CH 16V 0.1U	4	
C5162	EEVHB1C470	E.CAPACITOR 16V 47U	1	
C5163,64	ECUX1A105KBN	C.CAPACITOR CH 10V 1U	2	
C5165,66	ECUX1C104KBV	C.CAPACITOR CH 16V 0.1U	2	
C5167	EEVHB1C470	E.CAPACITOR 16V 47U	1	
C5168	ECUX1C104KBV	C.CAPACITOR CH 16V 0.1U	1	
C5169,70	ECUX1A105KBN	C.CAPACITOR CH 10V 1U	2	
C5171,72	ECUX1C104KBV	C.CAPACITOR CH 16V 0.1U	2	
C5173	EEVHB1C470	E.CAPACITOR 16V 47U	1	
C5174	ECUX1C104KBV	C.CAPACITOR CH 16V 0.1U	1	
C5175,76	ECUX1A105KBN	C.CAPACITOR CH 10V 1U	2	
C5177	EEVHB1C470	E.CAPACITOR 16V 47U	1	
C5178	ECUX1C104KBV	C.CAPACITOR CH 16V 0.1U	1	
C5179-82	F1L1E4750006	C.CAPACITOR 25V 4.7U	4	
C5301-08	ECUX1C104KBV	C.CAPACITOR CH 16V 0.1U	8	
C5309-11	ECUX1E104KBN	C.CAPACITOR CH 25V 0.1U	3	
C5312	ECUX1C104KBV	C.CAPACITOR CH 16V 0.1U	1	
C5313	ECUX1E104KBN	C.CAPACITOR CH 25V 0.1U	1	
C5314	ECUX1C104KBV	C.CAPACITOR CH 16V 0.1U	1	
C5315	ECUX1E104KBN	C.CAPACITOR CH 25V 0.1U	1	
C5316	ECUX1H220JCV	C.CAPACITOR CH 50V 22P	1	
C5317	ECUX1E104KBN	C.CAPACITOR CH 25V 0.1U	1	
C5318	ECUX1H220JCV	C.CAPACITOR CH 50V 22P	1	
C5319	ECUX1E104KBN	C.CAPACITOR CH 25V 0.1U	1	
C5320	ECUX1H220JCV	C.CAPACITOR CH 50V 22P	1	
C5321	ECUX1E104KBN	C.CAPACITOR CH 25V 0.1U	1	
C5322	ECUX1H220JCV	C.CAPACITOR CH 50V 22P	1	
C5401,02	ECUX1C104KBV	C.CAPACITOR CH 16V 0.1U	2	
C5403	F1L1E4750006	C.CAPACITOR 25V 4.7U	1	
C5404-30	ECUX1C104KBV	C.CAPACITOR CH 16V 0.1U	27	
C5501,02	ECUX1C104KBV	C.CAPACITOR CH 16V 0.1U	2	
C5503-05	ECUX1H221JCV	C.CAPACITOR CH 50V 220P	3	
C5506	ECUX1H103KBV	C.CAPACITOR CH 50V 0.01U	1	
C5507-10	ECUX1C104KBV	C.CAPACITOR CH 16V 0.1U	4	
C5511	ECUX1H221JCV	C.CAPACITOR CH 50V 220P	1	
C5512-15	ECUX1C104KBV	C.CAPACITOR CH 16V 0.1U	4	
C5516	ECUX1H103KBV	C.CAPACITOR CH 50V 0.01U	1	
C5517,18	ECUX1C104KBV	C.CAPACITOR CH 16V 0.1U	2	

Ref.No.	Part No.	Part Name & Description	Pcs	Remarks
C5519	EEVHB1A221P	E.CAPACITOR 10V 220U	1	
C5520	ECUX1C104KBV	C.CAPACITOR CH 16V 0.1U	1	
C5521	ECUX1H103KBV	C.CAPACITOR CH 50V 0.01U	1	
C5522-26	ECUX1C104KBV	C.CAPACITOR CH 16V 0.1U	5	
C5701-04	ECUX1C104KBV	C.CAPACITOR CH 16V 0.1U	4	
C5705	F1L1E4750006	C.CAPACITOR 25V 4.7U	1	
C5706,07	ECUX1C104KBV	C.CAPACITOR CH 16V 0.1U	2	
C5708,09	F1L1E4750006	C.CAPACITOR 25V 4.7U	2	
C5710,11	ECUX1C104KBV	C.CAPACITOR CH 16V 0.1U	2	
C5712,13	F1L1E4750006	C.CAPACITOR 25V 4.7U	2	
C5714	ECUX1C104KBV	C.CAPACITOR CH 16V 0.1U	1	
C5715	F1L1E4750006	C.CAPACITOR 25V 4.7U	1	
C5716	ECUX1C104KBV	C.CAPACITOR CH 16V 0.1U	1	
C5717	F1L1E4750006	C.CAPACITOR 25V 4.7U	1	
C5718	ECUX1C104KBV	C.CAPACITOR CH 16V 0.1U	1	
C5719	F1L1E4750006	C.CAPACITOR 25V 4.7U	1	
C5720	ECUX1C104KBV	C.CAPACITOR CH 16V 0.1U	1	
C5721	ECUX1H560JCV	C.CAPACITOR CH 50V 56P	1	
C5722	ECUX1C104KBV	C.CAPACITOR CH 16V 0.1U	1	
C5723	ECUX1H560JCV	C.CAPACITOR CH 50V 56P	1	
C5724-34	ECUX1C104KBV	C.CAPACITOR CH 16V 0.1U	11	
C5735,36	ECUX1H100DCV	C.CAPACITOR CH 50V 10P	2	
C5737-52	ECUX1C104KBV	C.CAPACITOR CH 16V 0.1U	16	
C5753	ECUX1H221JCV	C.CAPACITOR CH 50V 220P	1	
C5754	ECUX1H560JCV	C.CAPACITOR CH 50V 56P	1	
C5755	ECUX1C104KBV	C.CAPACITOR CH 16V 0.1U	1	
C5756	ECUX1H820JCV	C.CAPACITOR CH 50V 82P	1	
C5757	ECUX1H121JCV	C.CAPACITOR CH 50V 120P	1	
C5758-60	ECUX1C104KBV	C.CAPACITOR CH 16V 0.1U	3	
C5761	ECUX1H820JCV	C.CAPACITOR CH 50V 82P	1	
C5762	ECUX1H221JCV	C.CAPACITOR CH 50V 220P	1	
C5763	ECUX1H560JCV	C.CAPACITOR CH 50V 56P	1	
C5764	ECUX1H121JCV	C.CAPACITOR CH 50V 120P	1	
C5765	ECUX1H221JCV	C.CAPACITOR CH 50V 220P	1	
C5766	ECUX1H271JCV	C.CAPACITOR CH 50V 270P	1	
C5767,68	ECUX1H121JCV	C.CAPACITOR CH 50V 120P	2	
C5769	ECUX1H221JCV	C.CAPACITOR CH 50V 220P	1	
C5770,71	ECUX1H271JCV	C.CAPACITOR CH 50V 270P	2	
C5772	ECUX1H680JCV	C.CAPACITOR CH 50V 68P	1	
C5773	ECUX1H271JCV	C.CAPACITOR CH 50V 270P	1	
C5774	ECUX1H680JCV	C.CAPACITOR CH 50V 68P	1	
C5775-90	ECUX1C104KBV	C.CAPACITOR CH 16V 0.1U	16	
C5791	ECUX1H102JCV	C.CAPACITOR CH 50V 1000P	1	
C5792	ECUX1C104KBV	C.CAPACITOR CH 16V 0.1U	1	
C5794	ECUX1C104KBV	C.CAPACITOR CH 16V 0.1U	1	
C5795	ECUX1H102JCV	C.CAPACITOR CH 50V 1000P	1	
C5796	ECUX1C104KBV	C.CAPACITOR CH 16V 0.1U	1	
C5798,99	ECUX1C104KBV	C.CAPACITOR CH 16V 0.1U	2	
C5800	F1L1E4750006	C.CAPACITOR 25V 4.7U	1	
C5801	ECUX1H182KBV	C.CAPACITOR CH 50V 1800P	1	
C5802	ECUX1C104KBV	C.CAPACITOR CH 16V 0.1U	1	
C5803	F1L1E4750006	C.CAPACITOR 25V 4.7U	1	
C5804	ECUX1C104KBV	C.CAPACITOR CH 16V 0.1U	1	
C5805	F1L1E4750006	C.CAPACITOR 25V 4.7U	1	
C5806	ECUX1H182KBV	C.CAPACITOR CH 50V 1800P	1	
C5807	ECUX1C104KBV	C.CAPACITOR CH 16V 0.1U	1	
C5808	F1L1E4750006	C.CAPACITOR 25V 4.7U	1	
C5809-12	ECUX1C104KBV	C.CAPACITOR CH 16V 0.1U	4	
C5901-05	EEVHB1C470	E.CAPACITOR 16V 47U	5	
C5906	ECUX1E104KBN	C.CAPACITOR CH 25V 0.1U	1	
C5907	ECUX1C104KBV	C.CAPACITOR CH 16V 0.1U	1	
C5908	ECUX1E104KBN	C.CAPACITOR CH 25V 0.1U	1	
C5909-15	ECUX1C104KBV	C.CAPACITOR CH 16V 0.1U	7	
C5916-21	F1L1E4750006	C.CAPACITOR 25V 4.7U	6	
C5922-24	ECUX1C104KBV	C.CAPACITOR CH 16V 0.1U	3	
D5101,02	MA142K	DIODE	2	
D5103-06	MA704A	DIODE	4	
D5701-08	MA704A	DIODE	8	
FL5401	VLF0931	FILTER	1	F1Y2A1030001
FL5901-05	VLF0931	FILTER	5	F1Y2A1030001
IC5101	MB10HL124PFF	IC	1	C0JBZZ000215
IC5102	MB10HL131PF	IC	1	

Ref.No.	Part No.	Part Name & Description	Pcs	Remarks
IC5103	MB10HL116PF	IC	1	
IC5113,14	MC1495D	IC	2	
IC5115	XC62AP5002P	IC	1	
IC5116	XC62DN5002P	IC	1	
IC5117	XC62AP5002P	IC	1	
IC5118	XC62DN5002P	IC	1	
IC5301	NJM084V	IC	1	
IC5401	XC62AP3002P	IC	1	
IC5402	M62370GP	IC	1	C0FBBD000082
IC5403,04	TC4S30F	IC	2	C0JBAZ000429
IC5405-08	TC7W53F	IC	4	
IC5409	NJM084V	IC	1	
IC5501,02	TVHT245F	IC	2	
IC5503,04	TC4S30F	IC	2	C0JBAZ000429
IC5505	TL7705CPSB	IC	1	
IC5506,07	I2032-80LT48	IC	2	C0JBAZ000664
IC5508,09	TVHT245F	IC	2	
IC5510,11	TC7W125FU	IC	2	
IC5701	XC62AP5002P	IC	1	
IC5702	XC62DN5002P	IC	1	
IC5703	XC62AP5002P	IC	1	
IC5704	XC62DN5002P	IC	1	
IC5705,06	UPC1663G	IC	2	C1CB00000329
IC5707,08	NJM1496V	IC	2	
IC5709,10	NJM082BV	IC	2	
IC5713	XC62AP5002P	IC	1	
IC5714	XC62DN5002P	IC	1	
IC5715	XC62AP5002P	IC	1	
IC5716	XC62DN5002P	IC	1	
J1-J3	VJR1095	LUG TERMINAL	3	
L5101-04	VLQ0163JR47	COIL 0.47UH	4	G1CR47J00004
L5701	VLQ0163J4R7	COIL 4.7UH	1	G1C4R7J00004
L5702	VLQ0163JR47	COIL 0.47UH	1	G1CR47J00004
L5703	VLQ0163J4R7	COIL 4.7UH	1	G1C4R7J00004
L5704	VLQ0163JR47	COIL 0.47UH	1	G1CR47J00004
L5705	VLQ0163J4R7	COIL 4.7UH	1	G1C4R7J00004
L5706,07	VLQ0163JR47	COIL 0.47UH	2	G1CR47J00004
L5708	VLQ0163J4R7	COIL 4.7UH	1	G1C4R7J00004
P5001	VJS3978E140F	CONNECTOR (FEMALE)	1	K1KBE0A00010
P5002	VJP3862F080	CONNECTOR (MALE)	1	K1KA80B00024
P5501	VJP3125B008	CONNECTOR (MALE)	1	
Q5101,02	2SC3930	TRANSISTOR	2	
Q5103,04	XN6537	TRANSISTOR-RESISTOR	2	
Q5105,06	2SC3930	TRANSISTOR	2	
Q5107-09	2SD1979	TRANSISTOR	3	
Q5110	2SK508K512	TRANSISTOR	1	
Q5111	2SD1979	TRANSISTOR	1	
Q5112-14	2SK508K512	TRANSISTOR	3	
Q5115-18	2SD1979	TRANSISTOR	4	
Q5119,20	XP0553100L	TRANSISTOR-RESISTOR	2	
Q5121-24	2SD1979	TRANSISTOR	4	
Q5125,26	XP0553100L	TRANSISTOR-RESISTOR	2	
Q5301	2SD601A-R	TRANSISTOR	1	
Q5302	2SB709A-R	TRANSISTOR	1	
Q5303	2SD601A-R	TRANSISTOR	1	
Q5304	2SB709A-R	TRANSISTOR	1	
Q5305	2SD601A-R	TRANSISTOR	1	
Q5306	2SB709A-R	TRANSISTOR	1	
Q5307	2SD601A-R	TRANSISTOR	1	
Q5308	2SB709A-R	TRANSISTOR	1	
Q5701	2SD1979	TRANSISTOR	1	
Q5702,03	2SC3930	TRANSISTOR	2	
Q5704	2SD1979	TRANSISTOR	1	
Q5705	XN6537	TRANSISTOR-RESISTOR	1	
Q5706	2SD1979	TRANSISTOR	1	
Q5707	2SC3930	TRANSISTOR	1	
Q5708	XN6537	TRANSISTOR-RESISTOR	1	
Q5709	2SD1979	TRANSISTOR	1	
Q5710	2SC3930	TRANSISTOR	1	
Q5711	XP0553100L	TRANSISTOR-RESISTOR	1	
Q5712	2SC3930	TRANSISTOR	1	

Ref.No.	Part No.	Part Name & Description	Pcs	Remarks
Q5713	XP0553100L	TRANSISTOR-RESISTOR	1	
Q5714	2SC3930	TRANSISTOR	1	
Q5715,16	XP0553100L	TRANSISTOR-RESISTOR	2	
Q5717-22	2SD1979	TRANSISTOR	6	
Q5723	2SC3930	TRANSISTOR	1	
Q5724	2SD1979	TRANSISTOR	1	
Q5725	2SC3130	TRANSISTOR	1	
Q5726	2SD1979	TRANSISTOR	1	
Q5727	2SC3130	TRANSISTOR	1	
Q5728	2SC3930	TRANSISTOR	1	
Q5729,30	2SD1979	TRANSISTOR	2	
Q5901	XP03311	TRANSISTOR	1	
Q5902	2SD2402	TRANSISTOR	1	
QR5301-04	UN5215	TRANSISTOR-RESISTOR	4	
QR5401	UN5111	TRANSISTOR-RESISTOR	1	
QR5501	UN5111	TRANSISTOR-RESISTOR	1	
R5101-03	ERJ6GEYG101	M.RESISTOR CH 1/10W 100	3	
R5105	ERJ6GEY0R00	M.RESISTOR CH 1/10W 0	1	
R5106-10	ERJ6GEYG331	M.RESISTOR CH 1/10W 330	5	
R5111	ERJ6GEYG121	M.RESISTOR CH 1/10W 120	1	
R5112	ERJ6GEYG471	M.RESISTOR CH 1/10W 470	1	
R5113	ERJ6GEYG121	M.RESISTOR CH 1/10W 120	1	
R5114	ERJ6GEYG471	M.RESISTOR CH 1/10W 470	1	
R5115	ERJ6GEYG121	M.RESISTOR CH 1/10W 120	1	
R5116	ERJ6GEYG471	M.RESISTOR CH 1/10W 470	1	
R5117	ERJ6GEYG121	M.RESISTOR CH 1/10W 120	1	
R5118	ERJ6GEYG471	M.RESISTOR CH 1/10W 470	1	
R5119	ERJ6GEYG121	M.RESISTOR CH 1/10W 120	1	
R5120	ERJ6GEYG471	M.RESISTOR CH 1/10W 470	1	
R5121	ERJ3GEYG102	M.RESISTOR CH 1/16W 1K	1	
R5122-25	ERJ6GEYG331	M.RESISTOR CH 1/10W 330	4	
R5126-29	ERJ3GEYJ470	M.RESISTOR CH 1/16W 47	4	
R5130	ERJ3GEYJ330	M.RESISTOR CH 1/16W 33	1	
R5131	ERJ3RBD333	M.RESISTOR CH 1/16W 33K	1	
R5132	ERJ3GEYJ330	M.RESISTOR CH 1/16W 33	1	
R5133	ERJ3RBD333	M.RESISTOR CH 1/16W 33K	1	
R5134,35	ERJ3GEYJ101	M.RESISTOR CH 1/16W 100	2	
R5136,37	ERJ3RBD221	M.RESISTOR CH 1/16W 220	2	
R5138,39	ERJ3RBD271	M.RESISTOR CH 1/16W 270	2	
R5140,41	ERJ3RBD221	M.RESISTOR CH 1/16W 220	2	
R5142	ERJ3GEYJ330	M.RESISTOR CH 1/16W 33	1	
R5143	ERJ3RBD103	M.RESISTOR CH 1/16W 10K	1	
R5144	ERJ3GEYJ330	M.RESISTOR CH 1/16W 33	1	
R5145	ERJ3RBD103	M.RESISTOR CH 1/16W 10K	1	
R5146-49	ERJ3GEYG152	M.RESISTOR CH 1/16W 1.5K	4	
R5150,51	ERJ3RBD331	M.RESISTOR CH 1/16W 330	2	
R5152,53	ERJ3RED390	M.RESISTOR CH 1/16W 39	2	
R5154,55	ERJ3GEYJ103	M.RESISTOR CH 1/16W 10K	2	
R5156,57	ERJ3GEYJ681	M.RESISTOR CH 1/16W 680	2	
R5158,59	ERJ3RBD181	M.RESISTOR CH 1/16W 180	2	
R5160,61	ERJ3GEYJ103	M.RESISTOR CH 1/16W 10K	2	
R5162,63	ERJ3RBD222	M.RESISTOR CH 1/16W 2.2K	2	
R5164,65	ERJ3GEYJ103	M.RESISTOR CH 1/16W 10K	2	
R5166,67	ERJ3GEYJ681	M.RESISTOR CH 1/16W 680	2	
R5168,69	ERJ3GEYJ103	M.RESISTOR CH 1/16W 10K	2	
R5170,71	ERJ3RED390	M.RESISTOR CH 1/16W 39	2	
R5172,73	ERJ3RBD331	M.RESISTOR CH 1/16W 330	2	
R5174-77	ERJ3GEYJ470	M.RESISTOR CH 1/16W 47	4	
R5178-80	ERJ3GEYJ330	M.RESISTOR CH 1/16W 33	3	
R5181	ERJ3GEYG102	M.RESISTOR CH 1/16W 1K	1	
R5182	ERJ3GEYJ330	M.RESISTOR CH 1/16W 33	1	
R5183-89	ERJ3GEYG102	M.RESISTOR CH 1/16W 1K	7	
R5190-93	ERJ3GEYJ470	M.RESISTOR CH 1/16W 47	4	
R5194,95	ERJ3RBD681	M.RESISTOR CH 1/16W 680	2	
R5196,97	ERJ3RBD221	M.RESISTOR CH 1/16W 220	2	
R5198,99	ERJ3RBD331	M.RESISTOR CH 1/16W 330	2	
R5200,01	ERJ3GEYG152	M.RESISTOR CH 1/16W 1.5K	2	
R5202,03	ERJ3GEYJ470	M.RESISTOR CH 1/16W 47	2	
R5204,05	ERJ3GEYJ103	M.RESISTOR CH 1/16W 10K	2	
R5206-09	ERJ3RED820	M.RESISTOR CH 1/16W 82	4	
R5210,11	ERJ3GEYJ103	M.RESISTOR CH 1/16W 10K	2	
R5212,13	ERJ3RBD122	M.RESISTOR CH 1/16W 1.2K	2	
R5214,15	ERJ3GEYG152	M.RESISTOR CH 1/16W 1.5K	2	

Ref.No.	Part No.	Part Name & Description	Pcs	Remarks
R5216	ERJ3RBD101	M.RESISTOR CH 1/16W 100	1	
R5217	ERJ3RBD331	M.RESISTOR CH 1/16W 330	1	
R5218	ERJ3RBD101	M.RESISTOR CH 1/16W 100	1	
R5219-21	ERJ3RBD331	M.RESISTOR CH 1/16W 330	3	
R5222,23	ERJ3GEYJ470	M.RESISTOR CH 1/16W 47	2	
R5224	ERJ3RBD681	M.RESISTOR CH 1/16W 680	1	
R5225,26	ERJ3GEYJ470	M.RESISTOR CH 1/16W 47	2	
R5227	ERJ3RBD681	M.RESISTOR CH 1/16W 680	1	
R5228-30	ERJ3GEYJ330	M.RESISTOR CH 1/16W 33	3	
R5231	ERJ3GEYG472	M.RESISTOR CH 1/16W 4.7K	1	
R5232	ERJ3GEYJ330	M.RESISTOR CH 1/16W 33	1	
R5233-35	ERJ3GEYG472	M.RESISTOR CH 1/16W 4.7K	3	
R5301	ERJ3GEYJ153	M.RESISTOR CH 1/16W 15K	1	
R5302	ERJ3GEYG682	M.RESISTOR CH 1/16W 6.8K	1	
R5303	ERJ3GEYJ153	M.RESISTOR CH 1/16W 15K	1	
R5304,05	ERJ3GEYG682	M.RESISTOR CH 1/16W 6.8K	2	
R5306	ERJ3GEYJ153	M.RESISTOR CH 1/16W 15K	1	
R5307	ERJ3GEYG682	M.RESISTOR CH 1/16W 6.8K	1	
R5308,09	ERJ3GEYJ153	M.RESISTOR CH 1/16W 15K	2	
R5311	ERJ3GEYJ470	M.RESISTOR CH 1/16W 47	1	
R5312	ERJ3GEYJ122	M.RESISTOR CH 1/16W 1.2K	1	
R5313	ERJ3GEYJ103	M.RESISTOR CH 1/16W 10K	1	
R5314	ERJ3GEYJ153	M.RESISTOR CH 1/16W 15K	1	
R5316	ERJ3GEYJ470	M.RESISTOR CH 1/16W 47	1	
R5317	ERJ3GEYJ122	M.RESISTOR CH 1/16W 1.2K	1	
R5318	ERJ3GEYJ103	M.RESISTOR CH 1/16W 10K	1	
R5319	ERJ3GEYJ122	M.RESISTOR CH 1/16W 1.2K	1	
R5320	ERJ3GEYJ153	M.RESISTOR CH 1/16W 15K	1	
R5322	ERJ3GEYJ470	M.RESISTOR CH 1/16W 47	1	
R5323	ERJ3GEYJ103	M.RESISTOR CH 1/16W 10K	1	
R5325	ERJ3GEYJ122	M.RESISTOR CH 1/16W 1.2K	1	
R5326	ERJ3GEYJ153	M.RESISTOR CH 1/16W 15K	1	
R5327	ERJ3GEYJ470	M.RESISTOR CH 1/16W 47	1	
R5328,29	ERJ3GEYJ103	M.RESISTOR CH 1/16W 10K	2	
R5330	ERJ3GEYJ392	M.RESISTOR CH 1/16W 3.9K	1	
R5331	ERJ3GEYJ103	M.RESISTOR CH 1/16W 10K	1	
R5332	ERJ3GEYJ392	M.RESISTOR CH 1/16W 3.9K	1	
R5333	ERJ3GEYJ103	M.RESISTOR CH 1/16W 10K	1	
R5334	ERJ3GEYJ392	M.RESISTOR CH 1/16W 3.9K	1	
R5335	ERJ3GEYJ103	M.RESISTOR CH 1/16W 10K	1	
R5336	ERJ3GEYJ392	M.RESISTOR CH 1/16W 3.9K	1	
R5337-40	ERJ3GEYJ222	M.RESISTOR CH 1/16W 2.2K	4	
R5401-03	ERJ3GEYJ103	M.RESISTOR CH 1/16W 10K	3	
R5404-15	ERJ3GEYJ101	M.RESISTOR CH 1/16W 100	12	
R5416-18	ERJ3GEYJ103	M.RESISTOR CH 1/16W 10K	3	
R5419-21	ERJ3GEYJ101	M.RESISTOR CH 1/16W 100	3	
R5423	ERJ3GEYJ101	M.RESISTOR CH 1/16W 100	1	
R5425,26	ERJ3GEYJ101	M.RESISTOR CH 1/16W 100	2	
R5427-30	ERJ3RBD103	M.RESISTOR CH 1/16W 10K	4	
R5431,32	ERJ3GEYJ101	M.RESISTOR CH 1/16W 100	2	
R5501-21	ERJ3GEYJ103	M.RESISTOR CH 1/16W 10K	21	
R5522-25	ERJ3RBD153	M.RESISTOR CH 1/16W 15K	4	
R5526,27	ERJ3GEYJ103	M.RESISTOR CH 1/16W 10K	2	
R5529,30	ERJ3GEYJ103	M.RESISTOR CH 1/16W 10K	2	
R5531,32	ERJ3GEYJ101	M.RESISTOR CH 1/16W 100	2	
R5533	ERJ3GEYJ222	M.RESISTOR CH 1/16W 2.2K	1	
R5534-71	ERJ3GEYJ101	M.RESISTOR CH 1/16W 100	38	
R5701-04	ERJ3GEYJ470	M.RESISTOR CH 1/16W 47	4	
R5705	ERJ3GEYJ103	M.RESISTOR CH 1/16W 10K	1	
R5706	ERJ3GEYJ330	M.RESISTOR CH 1/16W 33	1	
R5707	ERJ3RBD682	M.RESISTOR CH 1/16W 6.8K	1	
R5708	ERJ3RBD561	M.RESISTOR CH 1/16W 560	1	
R5709-11	ERJ3GEYJ470	M.RESISTOR CH 1/16W 47	3	
R5712	ERJ3GEYJ330	M.RESISTOR CH 1/16W 33	1	
R5713	ERJ3GEYJ470	M.RESISTOR CH 1/16W 47	1	
R5714	ERJ3GEYJ103	M.RESISTOR CH 1/16W 10K	1	
R5715	ERJ3RBD682	M.RESISTOR CH 1/16W 6.8K	1	
R5716	ERJ3RBD561	M.RESISTOR CH 1/16W 560	1	
R5717	ERJ3RBD151	M.RESISTOR CH 1/16W 150	1	
R5718,19	ERJ3RBD561	M.RESISTOR CH 1/16W 560	2	
R5720,21	ERJ3GEYJ470	M.RESISTOR CH 1/16W 47	2	
R5722	ERJ3RBD391	M.RESISTOR CH 1/16W 390	1	
R5724	ERJ3GEYJ103	M.RESISTOR CH 1/16W 10K	1	
R5725	ERJ3RBD561	M.RESISTOR CH 1/16W 560	1	
R5726	ERJ3GEYJ330	M.RESISTOR CH 1/16W 33	1	

Ref.No.	Part No.	Part Name & Description	Pcs	Remarks
R5727	ERJ3RBD822	M.RESISTOR CH 1/16W 8.2K	1	
R5728	ERJ3RBD151	M.RESISTOR CH 1/16W 150	1	
R5729,30	ERJ3RBD561	M.RESISTOR CH 1/16W 560	2	
R5731,32	ERJ3GEYJ470	M.RESISTOR CH 1/16W 47	2	
R5733	ERJ3RBD391	M.RESISTOR CH 1/16W 390	1	
R5735	ERJ3GEYJ103	M.RESISTOR CH 1/16W 10K	1	
R5736	ERJ3GEYJ330	M.RESISTOR CH 1/16W 33	1	
R5737	ERJ3RBD561	M.RESISTOR CH 1/16W 560	1	
R5738	ERJ3RBD822	M.RESISTOR CH 1/16W 8.2K	1	
R5739,40	ERJ3GEYJ330	M.RESISTOR CH 1/16W 33	2	
R5741,42	ERJ3GEYJ470	M.RESISTOR CH 1/16W 47	2	
R5743	ERJ3GEYJ122	M.RESISTOR CH 1/16W 1.2K	1	
R5744	ERJ3GEYG472	M.RESISTOR CH 1/16W 4.7K	1	
R5745	ERJ3GEYJ272	M.RESISTOR CH 1/16W 2.7K	1	
R5746,47	ERJ3GEYJ330	M.RESISTOR CH 1/16W 33	2	
R5748,49	ERJ3GEYJ470	M.RESISTOR CH 1/16W 47	2	
R5750	ERJ3GEYG472	M.RESISTOR CH 1/16W 4.7K	1	
R5751	ERJ3GEYJ122	M.RESISTOR CH 1/16W 1.2K	1	
R5752	ERJ3GEYJ272	M.RESISTOR CH 1/16W 2.7K	1	
R5753,54	ERJ3GEYG102	M.RESISTOR CH 1/16W 1K	2	
R5755,56	ERJ3GEYJ470	M.RESISTOR CH 1/16W 47	2	
R5757	ERJ3GEYJ272	M.RESISTOR CH 1/16W 2.7K	1	
R5758,59	ERJ3GEYG102	M.RESISTOR CH 1/16W 1K	2	
R5760,61	ERJ3GEYJ470	M.RESISTOR CH 1/16W 47	2	
R5762	ERJ3GEYJ272	M.RESISTOR CH 1/16W 2.7K	1	
R5764,65	ERJ3GEYG152	M.RESISTOR CH 1/16W 1.5K	2	
R5767,68	ERJ3GEYG152	M.RESISTOR CH 1/16W 1.5K	2	
R5769	ERJ3GEYJ330	M.RESISTOR CH 1/16W 33	1	
R5770,71	ERJ3GEYG102	M.RESISTOR CH 1/16W 1K	2	
R5772,73	ERJ3GEYJ470	M.RESISTOR CH 1/16W 47	2	
R5774,75	ERJ3GEYG102	M.RESISTOR CH 1/16W 1K	2	
R5776	ERJ3GEYJ330	M.RESISTOR CH 1/16W 33	1	
R5777,78	ERJ3GEYJ470	M.RESISTOR CH 1/16W 47	2	
R5779-82	ERJ3GEYG102	M.RESISTOR CH 1/16W 1K	4	
R5783	ERJ3GEYJ330	M.RESISTOR CH 1/16W 33	1	
R5784	ERJ3RED470	M.RESISTOR CH 1/16W 47	1	
R5785	ERJ3RBD101	M.RESISTOR CH 1/16W 100	1	
R5786	ERJ3GEYJ330	M.RESISTOR CH 1/16W 33	1	
R5787	ERJ3RED470	M.RESISTOR CH 1/16W 47	1	
R5788	ERJ3RBD101	M.RESISTOR CH 1/16W 100	1	
R5789	ERJ3GEYJ103	M.RESISTOR CH 1/16W 10K	1	
R5790	ERJ3GEYG102	M.RESISTOR CH 1/16W 1K	1	
R5791-95	ERJ3GEYJ103	M.RESISTOR CH 1/16W 10K	5	
R5796	ERJ3GEYG102	M.RESISTOR CH 1/16W 1K	1	
R5797	ERJ3GEYJ470	M.RESISTOR CH 1/16W 47	1	
R5798	ERJ3GEYG102	M.RESISTOR CH 1/16W 1K	1	
R5799	ERJ3RED470	M.RESISTOR CH 1/16W 47	1	
R5800	ERJ3GEYJ103	M.RESISTOR CH 1/16W 10K	1	
R5801	ERJ3GEYG102	M.RESISTOR CH 1/16W 1K	1	
R5802	ERJ3RBD101	M.RESISTOR CH 1/16W 100	1	
R5803	ERJ3GEYJ103	M.RESISTOR CH 1/16W 10K	1	
R5804	ERJ3GEYJ470	M.RESISTOR CH 1/16W 47	1	
R5805	ERJ3RBD101	M.RESISTOR CH 1/16W 100	1	
R5806	ERJ3GEYG102	M.RESISTOR CH 1/16W 1K	1	
R5807	ERJ3RED470	M.RESISTOR CH 1/16W 47	1	
R5808	ERJ3GEYJ103	M.RESISTOR CH 1/16W 10K	1	
R5809	ERJ3GEYG102	M.RESISTOR CH 1/16W 1K	1	
R5810	ERJ3GEYJ103	M.RESISTOR CH 1/16W 10K	1	
R5811	ERJ3RBD221	M.RESISTOR CH 1/16W 220	1	
R5812	ERJ3GEYJ470	M.RESISTOR CH 1/16W 47	1	
R5813	ERJ3GEYG102	M.RESISTOR CH 1/16W 1K	1	
R5814	ERJ3GEYG682	M.RESISTOR CH 1/16W 6.8K	1	
R5815	ERJ3RBD821	M.RESISTOR CH 1/16W 820	1	
R5816	ERJ3RBD221	M.RESISTOR CH 1/16W 220	1	
R5817	ERJ3GEYJ470	M.RESISTOR CH 1/16W 47	1	
R5818	ERJ3RBD821	M.RESISTOR CH 1/16W 820	1	
R5819	ERJ3GEYG102	M.RESISTOR CH 1/16W 1K	1	
R5820	ERJ3GEYG682	M.RESISTOR CH 1/16W 6.8K	1	
R5821	ERJ3GEYG822	M.RESISTOR CH 1/16W 8.2K	1	
R5822-25	ERJ3GEYG102	M.RESISTOR CH 1/16W 1K	4	
R5826-29	ERJ3GEYJ560	M.RESISTOR CH 1/16W 56	4	
R5830	ERJ3RBD102	M.RESISTOR CH 1/16W 1K	1	
R5831	ERJ3GEYG822	M.RESISTOR CH 1/16W 8.2K	1	
R5832-35	ERJ3GEYG102	M.RESISTOR CH 1/16W 1K	4	
R5836-39	ERJ3GEYJ560	M.RESISTOR CH 1/16W 56	4	

Ref.No.	Part No.	Part Name & Description	Pcs	Remarks
R5840	ERJ3RBD102	M.RESISTOR CH 1/16W 1K	1	
R5841,42	ERJ3RBD681	M.RESISTOR CH 1/16W 680	2	
R5843	ERJ3RBD332	M.RESISTOR CH 1/16W 3.3K	1	
R5844,45	ERJ3RBD392	M.RESISTOR CH 1/16W 3.9K	2	
R5846	ERJ3RBD332	M.RESISTOR CH 1/16W 3.3K	1	
R5847,48	ERJ3RBD392	M.RESISTOR CH 1/16W 3.9K	2	
R5849	ERJ3RBD822	M.RESISTOR CH 1/16W 8.2K	1	
R5850,51	ERJ3GEYJ103	M.RESISTOR CH 1/16W 10K	2	
R5852	ERJ3RBD822	M.RESISTOR CH 1/16W 8.2K	1	
R5853	ERJ3GEYJ470	M.RESISTOR CH 1/16W 47	1	
R5854	ERJ3GEYJ101	M.RESISTOR CH 1/16W 100	1	
R5855	ERJ3GEYJ470	M.RESISTOR CH 1/16W 47	1	
R5856-58	ERJ3GEYJ101	M.RESISTOR CH 1/16W 100	3	
R5901,02	ERJ6GEYG681	M.RESISTOR CH 1/10W 680	2	
TP5101-04	EYF6CU	TEST POINT	4	
TP5301-04	EYF6CU	TEST POINT	4	
TP5405-08	EYF6CU	TEST POINT	4	
TP5701,02	EYF6CU	TEST POINT	2	
TP5703,04	VJR0646	TEST POINT	2	D0X0R0000022
		MISCELLANEOUS		
	VYQ1906	RF SHIELD CASE (TOP)	1	
	VSC4933	SHIELD HOLDER ANGLE	1	
	VSC5040	HEAD BUFF SHIELD (UPPER)	1	
	VSC4928	EARTH FINGER	1	
	XSN26+3	SCREW	1	
	VSC5041	HEAD BUFF SHIELD (MIDDLE)	1	
	VSC5042	P.C.BOARD SHIELD (LOWER)	1	
	VMZ3026	SHIELD PROTECT SHEET	1	
	VEE9862	EARTH CABLE	1	
	XNG2EFZ	NUT	2	
	XYN2+C8FZ	SCREW	2	
■ E16	VEP85192A	RF MOTHER P.C.BOARD	1	(RTL)
P5001,02	VJS3984E080	CONNECTOR (FEMALE)	2	K1KB80A00056
P5003	VJP3440A020	CONNECTOR (MALE)	1	K1KA20A00187
P5004	VJP3418A032	CONNECTOR (MALE)	1	K1KA32A00027
P5005	VJP1232T	CONNECTOR (MALE) 5P	1	
P5006	VJP1236T	CONNECTOR (MALE) 9P	1	K1KA09A00023
P5007	VJP1233T	CONNECTOR (MALE) 6P	1	
P5008	VJP1234T	CONNECTOR (MALE) 7P	1	K1KA07A00020
		MISCELLANEOUS		
	VMP6690	BUFF MOTHER HOLDER ANGLE	1	
■ E17	VEP80B76A	VTR MOTHER P.C.BOARD	1	(RTL)
D3	LN376GPX	DIODE	1	
J1	VJR1008	EARTH LUG	1	
P01,02	VJS3814	CONNECTOR (FEMALE)	2	K1KB96A00037
P03-07	VJS3510	CONNECTOR (FEMALE)	5	K1KBC8A00003
P8	VJP1243R	CONNECTOR (MALE)	1	K1KA03B00088
P08	VJS3510	CONNECTOR (FEMALE)	1	K1KBC8A00003
P09-21	VJS3814	CONNECTOR (FEMALE)	13	K1KB96A00037
P22	VJP1233T	CONNECTOR (MALE) 6P	1	
P23	VJP1234T	CONNECTOR (MALE) 7P	1	K1KA07A00020
P24	VJP1236T	CONNECTOR (MALE) 9P	1	K1KA09A00023
P25	VJP1232T	CONNECTOR (MALE) 5P	1	
P26	VJP3440A020	CONNECTOR (MALE)	1	K1KA20A00187

Components identified with the mark △ have the special characteracteristics for safety.
When replacing any of these components, use only the same type.

Ref.No.	Part No.	Part Name & Description	Pcs	Remarks
P27	VJP3418A032	CONNECTOR (MALE)	1	K1KA32A00027
P28	VJP3418A080	CONNECTOR (MALE)	1	K1KA80A00066
P29	VJP3081	CONNECTOR (MALE)	1	
P30	VJP3076	CONNECTOR (MALE)	1	
P31	VJP3082	CONNECTOR (MALE)	1	
P32	VJP2891A016	CONNECTOR (MALE)	1	K1KA16A00111
P33	VJP3440A012	CONNECTOR (MALE)	1	K1KA12A00056
P34	VJP2824B008	CONNECTOR (MALE)	1	K1KA08B00004
P35	VJP2824B009	CONNECTOR (MALE)	1	K1KA09B00016
P36	VJP2824A003	CONNECTOR (MALE) 3P	1	K1KA03A00008
P37	VJP2824A008	CONNECTOR (MALE)	1	K1KA08A00005
P38	VJP1230T	CONNECTOR (MALE) 3P	1	
P39	VJP3098A020	CONNECTOR (MALE)	1	K1KA20A00071
P40	VJP2540A040	CONNECTOR (MALE)	1	K1KA40A00039
P41	VJP2741B020	CONNECTOR (MALE)	1	K1KA20B00029
P42	VJP2741A014	CONNECTOR (MALE)	1	K1KA14A00119
P43	VJP2741A022	CONNECTOR (MALE)	1	K1KA22A00041
P44	VJP1233T	CONNECTOR (MALE) 6P	1	
P45	VJP1236T	CONNECTOR (MALE) 9P	1	K1KA09A00023
P46	VJP1230T	CONNECTOR (MALE) 3P	1	
P47	VJP1235T	CONNECTOR (MALE) 8P	1	
R2	ERDS2TJ181	C.RESISTOR 1/4W 180	1	
		MISCELLANEOUS		
	VMX2188020	SPACER	1	K9ZZ00000721
	XNG26EFXS	NUT	12	
	XSN26+8FZ	SCREW	12	
	XYE3+EF8FZ	SCREW	10	
	VMP6685	CONNECTOR FIX ANGLE (A)	1	
	VMP6686	CONNECTOR FIX ANGLE (B)	1	
	VMP6687	CONNECTOR FIX ANGLE (C)	1	
	VMP6688	CONNECTOR FIX ANGLE (D)	1	
	VMP6689	CONNECTOR FIX ANGLE (E)	1	
■ E18	VEP81183C	POWER 1 P.C.BOARD	1	(RTL)
△ C1101	ECQU2A224MV	P.CAPACITOR 100V 0.22U	1	
△ C1102,03	VCK0262K471A	C.CAPACITOR 470P	2	F1BAH4710001
△ C1104	ECQU2A474MV	P.CAPACITOR 100V 0.47U	1	
△ C1105,06	VCK0262K101A	C.CAPACITOR 100P	2	F1BAH101A001
△ C1107,08	VCK0260M152A	C.CAPACITOR 1500P	2	F1BAH1520004
△ C1109	VCK0260M102A	C.CAPACITOR 1000P	1	F1BAH1020010
C1110,11	ECUM1H104ZFN	C.CAPACITOR CH 50V 0.1U	2	
C1112	VCK0293	C.CAPACITOR	1	F0A2G3350001
C1115,16	VCK0106K471	C.CAPACITOR 470P	2	
C1117,18	ECEC2WC151EB	E.CAPACITOR 450V 150U	2	
C1119,20	VCK0106K471	C.CAPACITOR 470P	2	
C1121	ECA1HXLV100	E.CAPACITOR 50V 10U	1	
C1122	ECA1HXS100	E.CAPACITOR 50V 10U	1	
C1124,25	ECUM1E474ZFM	C.CAPACITOR CH 25V 0.47U	2	
C1126	ECUM1H102KBN	C.CAPACITOR CH 50V 1000P	1	
C1127	ECQV1H684JF	P.CAPACITOR 50V 0.68U	1	
C1128	EEUFC1H121L	E.CAPACITOR 50V 120U	1	
C1129	ECUM1H222KBN	C.CAPACITOR CH 50V 2200P	1	
C1130	ECUM1H104ZFN	C.CAPACITOR CH 50V 0.1U	1	
C1131	ECQF6222JZ	P.CAPACITOR 630V 2200P	1	
C1132,33	ECUM1H104ZFN	C.CAPACITOR CH 50V 0.1U	2	
C1134	ECUM1H472KBN	C.CAPACITOR CH 50V 4700P	1	
D1101	RBV606	DIODE	1	
D1102	TM1661S-L	DIODE	1	
D1103	U1GU44	DIODE	1	
D1104	FML-36S	DIODE	1	
D1105,06	ERA15-08	DIODE	2	B0AAMT000001
D1107,08	MA3200-M	DIODE	2	
D1110	MA151K	DIODE	1	
D1111-13	U1GU44	DIODE	3	
D1114,15	MA3068-M	DIODE	2	

Ref.No.	Part No.	Part Name & Description	Pcs	Remarks
D1116	MA3200-M	DIODE	1	
D1117	MA151K	DIODE	1	
D1120	MA1070400L	DIODE	1	
D1121	MA701A	DIODE	1	
IC1101	MC33262P	IC	1	C0DAZZZ00013
IC1102	M51945BL	IC	1	C0EAB0000004
IC1103	M51953BL	IC	1	C0EAH0000033
△ L1101	ELF18D850C	FILTER	1	
△ L1102,03	ELF18D604F	FILTER	2	
L1105	VLQ0820	COIL	1	
P1101	VJP2638	CONNECTOR (MALE)	1	K1KA02A00112
P1102,03	VJP2639	CONNECTOR (MALE)	2	K1KA02A00205
P1104	VJP4033	CONNECTOR (MALE)	1	K1KA06A00162
Q1101,02	2SK1941-01R	TRANSISTOR	2	
Q1105	UN2213	TRANSISTOR-RESISTOR	1	
△ R1101	ERC12AGM334C	S.RESISTOR 1/2W 33K	1	
△ R1102,03	ERU5TEJ100	F.RESISTOR 5W 10	2	
R1104	ERJ6GEYG103	M.RESISTOR CH 1/10W 10K	1	
R1105,06	ERG2SJ220	M.RESISTOR 2W 22	2	
R1107	VRE0206	M.RESISTOR	1	D0XGR05J0002
R1108	ERJ14YJ100	M.RESISTOR CH 1/4W 10	1	
R1109	ERJ14YJ220	M.RESISTOR CH 1/4W 22	1	
R1110	ERJ14YJ100	M.RESISTOR CH 1/4W 10	1	
R1111	ERJ14YJ220	M.RESISTOR CH 1/4W 22	1	
R1112	ERJ14YJ100	M.RESISTOR CH 1/4W 10	1	
R1113	ERJ12YJ473	M.RESISTOR CH 1/2W 47K	1	ERJ12YJ473U
R1114	ERJ6GEYF123	M.RESISTOR CH 1/10W 12K	1	
R1115,16	ERJ6GEYG221	M.RESISTOR CH 1/10W 220	2	
R1117,18	ERG3SJ333	M.RESISTOR 3W 33K	2	
R1119	ERJ6RBD273	M.RESISTOR CH 1/10W 27K	1	
R1120	ERJ6RBD183	M.RESISTOR CH 1/10W 18K	1	
R1122	ERJ12YJ473	M.RESISTOR CH 1/2W 47K	1	ERJ12YJ473U
R1123	ERJ14YJ474	M.RESISTOR CH 1/4W 470K	1	
R1125	ERJ6GEY0R00	M.RESISTOR CH 1/10W 0	1	
R1127	ERJ6GEY0R00	M.RESISTOR CH 1/10W 0	1	
R1129	ERJ14YJ474	M.RESISTOR CH 1/4W 470K	1	
R1130	ERJ6GEYG103	M.RESISTOR CH 1/10W 10K	1	
R1131	ERJ6GEYG221	M.RESISTOR CH 1/10W 220	1	
R1134,35	ERJ14YJ224	M.RESISTOR CH 1/4W 220K	2	ERJ14YJ224U
R1136	ERJ14YJ154	M.RESISTOR CH 1/4W 150K	1	ERJ14YJ154U
R1137	ERJ6RBD103	M.RESISTOR CH 1/10W 10K	1	
R1138	ERJ6GEYF472	M.RESISTOR CH 1/10W 4.7K	1	
R1139-41	ERJ12YJ154	M.RESISTOR CH 1/2W 150K	3	
R1142	ERJ6RBD272	M.RESISTOR CH 1/10W 2.7K	1	
R1143,44	ERJ12YJ224	M.RESISTOR CH 1/2W 220K	2	
R1145	ERJ6GEYG103	M.RESISTOR CH 1/10W 10K	1	
R1146	VRT0142	THERMISTOR	1	D4DDB3310005
R1147	ERG2SJ271	M.RESISTOR 2W 270	1	
R1148-50	ERJ12YJ154	M.RESISTOR CH 1/2W 150K	3	
R1151	ERJ6RBD223	M.RESISTOR CH 1/10W 22K	1	
R1153,54	ERJ12YJ473	M.RESISTOR CH 1/2W 47K	2	ERJ12YJ473U
R1155,56	ERJ6GEYG103	M.RESISTOR CH 1/10W 10K	2	
R1158	ERJ6GEY0R00	M.RESISTOR CH 1/10W 0	1	
R1159	ERJ6GEYG104	M.RESISTOR CH 1/10W 100K	1	
R1160	ERJ6RED224	M.RESISTOR CH 1/10W 220K	1	
R1161	ERJ6RBD104	M.RESISTOR CH 1/10W 100K	1	
R1162	ERJ6RED334	M.RESISTOR CH 1/10W 330K	1	
R1163	ERJ6GEYG474	M.RESISTOR CH 1/10W 470K	1	
R1165	ERJ6GEYG273	M.RESISTOR CH 1/10W 27K	1	
R1166	ERJ6GEYG102	M.RESISTOR CH 1/10W 1K	1	
VR1102	VRV0111B501	V.RESISTOR 500	1	
		MISCELLANEOUS		
△	VMZ0965	CAPACITOR COVER	3	
△	VMZ1608	CAPACITOR TUBE	4	
	VSC5003	HEAT SINK (A)	1	
	XYE3+EF8	SCREW	2	
	XYN3+F6FZS	SCREW	1	

Components identified with the mark ⚠ have the special characteracteristics for safety.
When replacing any of these components, use only the same type.

Ref.No.	Part No.	Part Name & Description	Pcs	Remarks
	XYN3+F8FZS	SCREW	5	
	XYN3+F10	SCREW	1	
	VJR1008	EARTH LUG	3	
	VJF1348	CLAMPER	1	
■ E19	VEP81184F	POWER 2 P.C.BOARD	1	(RTL)
C1002,03	ECUM1H222KBN	C.CAPACITOR CH 50V 2200P	2	
C1004-07	ECUM1H104ZFN	C.CAPACITOR CH 50V 0.1U	4	
C1008	ECUM1H222KBN	C.CAPACITOR CH 50V 2200P	1	
C1009,10	ECA1HXL330	E.CAPACITOR 50V 33P	2	
C1011	ECA1HXLV010	E.CAPACITOR 50V 1U	1	
C1012	ECUM1H332KBN	C.CAPACITOR CH 50V 3300P	1	
C1013	ECA1HXLV010	E.CAPACITOR 50V 1U	1	
C1015	ECUM1H332KBN	C.CAPACITOR CH 50V 3300P	1	
C1016	ECHU1H471GB	P.CAPACITOR 50V 470P	1	
C1017	ECUM1H104KBN	C.CAPACITOR CH 50V 0.1U	1	
C1018	ECUM1E104KBM	C.CAPACITOR CH 25V 0.1U	1	
C1019	ECUM1H562KBN	C.CAPACITOR CH 50V 5600P	1	
C1020	ECUM1H104KBN	C.CAPACITOR CH 50V 0.1U	1	
C1021	ECHU1H471GB	P.CAPACITOR 50V 470P	1	
C1022	ECUM1H562KBN	C.CAPACITOR CH 50V 5600P	1	
C1023	ECUM1E104KBM	C.CAPACITOR CH 25V 0.1U	1	
C1024	ECUM1H104ZFN	C.CAPACITOR CH 50V 0.1U	1	
C1026	ECUM1E474ZFM	C.CAPACITOR CH 25V 0.47U	1	
C1027	ECUM1C105ZFN	C.CAPACITOR CH 16V 1U	1	
C1028	ECUM1H104ZFN	C.CAPACITOR CH 50V 0.1U	1	
C1040,41	EEUFA1A332L	E.CAPACITOR 10V 3300U	2	
C1042	EEUFA1V471	E.CAPACITOR 35V 470U	1	
C1043	EEUFA1E332	E.CAPACITOR 25V 3300U	1	
C1044,45	EEUFA1C222LE	E.CAPACITOR 16V 2200P	2	
C1046	EEUFA1E681E	E.CAPACITOR 25V 680P	1	
C1047,48	ECA1CXL101	E.CAPACITOR 16V 100U	2	ECA1CXLV101
C1049	ECA1VHG471	E.CAPACITOR 35V 100U	1	
C1050	ECA1EXLV101	E.CAPACITOR 25V 100U	1	
C1051-53	ECA1CXL101	E.CAPACITOR 16V 100U	3	ECA1CXLV101
C1054	ECUM1E104KBM	C.CAPACITOR CH 25V 0.1U	1	
C1055	ECUM1H104ZFN	C.CAPACITOR CH 50V 0.1U	1	
C1056	ECUM1E104KBM	C.CAPACITOR CH 25V 0.1U	1	
C1059	ECUM1H104ZFN	C.CAPACITOR CH 50V 0.1U	1	
C1060	ECUM1H121JCN	C.CAPACITOR CH 50V 120P	1	
C1062	VCK0106K151	C.CAPACITOR 150P	1	
C1063	ECA1VXLV470	E.CAPACITOR 35V 47U	1	
C1065	VCK0106K151	C.CAPACITOR 150P	1	
C1066	ECA1VXLV470	E.CAPACITOR 35V 47U	1	
C1067,68	ECQE6473KF	P.CAPACITOR 630V 0.047U	2	
C1069-75	ECKD2H101KB	C.CAPACITOR 500V 100P	7	
C1076-78	EEUFA1A822E	E.CAPACITOR 10V 8200P	3	
C1079	ECUM1H121JCN	C.CAPACITOR CH 50V 120P	1	
C1080,81	ECUM1H222KBN	C.CAPACITOR CH 50V 2200P	2	
C1083	ECUM1H104ZFN	C.CAPACITOR CH 50V 0.1U	1	
C1085	EEUFA1C222LE	E.CAPACITOR 16V 2200P	1	
C1086	ECUM1H102KBN	C.CAPACITOR CH 50V 1000P	1	
C1087	ECUM1H104ZFN	C.CAPACITOR CH 50V 0.1U	1	
C1088	EEUFA1A822E	E.CAPACITOR 10V 8200P	1	
C1089	ECA1HXS100	E.CAPACITOR 50V 10U	1	
C1090-93	ECUM1H104ZFN	C.CAPACITOR CH 50V 0.1U	4	
C1094	ECUM1H102KBN	C.CAPACITOR CH 50V 1000P	1	
C1095	ECUM1E474ZFM	C.CAPACITOR CH 25V 0.47U	1	
C1096	ECA1CXL101	E.CAPACITOR 16V 100U	1	ECA1CXLV101
C1097,98	ECUM1E474ZFM	C.CAPACITOR CH 25V 0.47U	2	
C1099	ECUM1H104ZFN	C.CAPACITOR CH 50V 0.1U	1	
D1001	MA151WK	DIODE	1	MA3X151E0L
D1004	MA151K	DIODE	1	
D1005	MA151WK	DIODE	1	MA3X151E0L
D1007	MA3082-H	DIODE	1	
D1008	MA3051-M	DIODE	1	
D1009	MA153	DIODE	1	
D1010	U1GU44	DIODE	1	

Ref.No.	Part No.	Part Name & Description	Pcs	Remarks
D1011	MA151K	DIODE	1	
D1012	MA3240-H	DIODE	1	
D1013,14	U1GU44	DIODE	2	
D1015	MA3240-H	DIODE	1	
D1017	U1GU44	DIODE	1	
D1018,19	MA3051-M	DIODE	2	
D1020-22	MA151K	DIODE	3	
D1023,24	MA3051-M	DIODE	2	
D1030	D30SC4M	DIODE	1	B0JBSE000022
D1031	FML-G12SP	DIODE	1	
D1032	RL4ZP	DIODE	1	B0HAPM000022
D1033,34	FML-G12SP	DIODE	2	
D1035	FMB-G14L	DIODE	1	
D1036	FML-G12SP	DIODE	1	
D1037,38	MA3075-M	DIODE	2	
D1039	MA3240-H	DIODE	1	
D1040	MA3160-L	DIODE	1	
D1041,42	MA3130-L	DIODE	2	
D1043	MA3160-L	DIODE	1	
D1044,45	U05NU44	DIODE	2	
D1046	EG01C	DIODE	1	B0HAGV000001
D1047	U1GU44	DIODE	1	
D1048	MA3240-H	DIODE	1	
D1049	EG01C	DIODE	1	B0HAGV000001
D1050	U1GU44	DIODE	1	
D1051	MA3240-H	DIODE	1	
D1052	MA151K	DIODE	1	
IC1001,02	FA5311BP	IC	2	C0DAAZZ00002
IC1011,12	UPC1093J	IC	2	C0DAEMC00002
IC1013	UPC393C	IC	1	C0BABZ000002
IC1014	PQ30RV31	IC	1	
J1001	VWJ0121	CABLE	1	
L1012	VLQ0479	COIL	1	
L1013	VLQ0605	COIL	1	
L1014	VLQ0655K220	COIL 22UH	1	
L1015,16	VLQ0605	COIL	2	
L1017	VLQ0354	COIL	1	
L1018	VLQ0655K220	COIL 22UH	1	
L1019	VLP0074	COIL	1	J0JDB0000002
L1021,22	VLP0074	COIL	2	J0JDB0000002
P1011	VJP2824B003	CONNECTOR (MALE)	1	K1KA03B00005
P1012	VJP2824B009	CONNECTOR (MALE)	1	K1KA09B00016
P1013	VJP2824B008	CONNECTOR (MALE)	1	K1KA08B00004
P1014	VJP1243T	CONNECTOR (MALE) 3P	1	
P1015	VJP4033	CONNECTOR (MALE)	1	K1KA06A00162
Q1002,03	2SD1478-R	TRANSISTOR	2	
Q1004	2SB710-R	TRANSISTOR	1	
Q1005	UN2213	TRANSISTOR-RESISTOR	1	
Q1006,07	2SB709-R	TRANSISTOR	2	
Q1011,12	2SK1835	TRANSISTOR	2	
⚠ Q1013-15	PS2561L1V1WL	TRANSISTOR	3	B3QAZ0000030
Q1017	UN2214	TRANSISTOR-RESISTOR	1	
Q1018	UN2211	TRANSISTOR-RESISTOR	1	
Q1019	UN2111	TRANSISTOR-RESISTOR	1	
⚠ Q1020	PS2561L1V1WL	TRANSISTOR	1	B3QAZ0000030
Q1022	UN2113	TRANSISTOR-RESISTOR	1	
Q1023	UN2213	TRANSISTOR-RESISTOR	1	
Q1024	UN2214	TRANSISTOR-RESISTOR	1	
R1001-05	ERJ6GEYG121	M.RESISTOR CH 1/10W 120	5	
R1006	ERG2SJ681	M.RESISTOR 2W 680	1	
R1007,08	ERJ6GEYG105	M.RESISTOR CH 1/10W 1M	2	
R1009	ERJ14YJ4R7	M.RESISTOR CH 1/4W 4.7	1	
R1010	ERJ6GEYG104	M.RESISTOR CH 1/10W 100K	1	
R1011	ERJ6RBD241	M.RESISTOR CH 1/10W 240	1	
R1012,13	ERJ6GEYG104	M.RESISTOR CH 1/10W 100K	2	
R1014	ERJ6GEYG154	M.RESISTOR CH 1/10W 150K	1	
R1016	ERJ14YJ4R7	M.RESISTOR CH 1/4W 4.7	1	
R1017	ERJ6RBD241	M.RESISTOR CH 1/10W 240	1	
R1018,19	ERJ6GEYJ225	M.RESISTOR CH 1/10W 2.2M	2	

Components identified with the mark ⚠ have the special characteracteristics for safety.
When replacing any of these components, use only the same type.

Ref.No.	Part No.	Part Name & Description	Pcs	Remarks
R1020	ERJ14YJ100	M.RESISTOR CH 1/4W 10	1	
R1021	ERG3SJ333	M.RESISTOR 3W 33K	1	
R1023,24	ERJ12YJ154	M.RESISTOR CH 1/2W 150K	2	
R1026	ERJ6GEYG683	M.RESISTOR CH 1/10W 68K	1	
R1027	ERJ6GEYG563	M.RESISTOR CH 1/10W 56K	1	
R1028	ERJ6RBD472	M.RESISTOR CH 1/10W 4.7K	1	
R1029	ERJ6GEYG221	M.RESISTOR CH 1/10W 220	1	
R1030	ERJ6RBD471	M.RESISTOR CH 1/10W 470	1	
R1031	ERJ14YJ100	M.RESISTOR CH 1/4W 10	1	
R1033,34	ERJ12YJ154	M.RESISTOR CH 1/2W 150K	2	
R1036	ERJ6GEYG104	M.RESISTOR CH 1/10W 100K	1	
R1037	ERJ6RBD472	M.RESISTOR CH 1/10W 4.7K	1	
R1038	ERJ6GEYG471	M.RESISTOR CH 1/10W 470	1	
R1039	ERJ6RBD681	M.RESISTOR CH 1/10W 680	1	
R1040,41	ERJ6GEYG121	M.RESISTOR CH 1/10W 120	2	
R1042	ERJ6GEYJ334	M.RESISTOR CH 1/10W 330K	1	
R1043	ERJ6RBD621	M.RESISTOR CH 1/10W 620	1	
R1044	ERJ6RBD391	M.RESISTOR CH 1/10W 390	1	
R1046,47	ERJ6GEYJ334	M.RESISTOR CH 1/10W 330K	2	
R1048,49	ERJ6GEYF473	M.RESISTOR CH 1/10W 47K	2	
R1050	ERG2SJ470	M.RESISTOR 2W 47	1	
R1051,52	ERJ6GEYG183	M.RESISTOR CH 1/10W 18K	2	
R1053	ERJ6RBD182	M.RESISTOR CH 1/10W 1.8K	1	
R1054	ERG2SJ470	M.RESISTOR 2W 47	1	
R1055	VRT0142	THERMISTOR	1	D4DDB3310005
R1056	ERJ6GEYG331	M.RESISTOR CH 1/10W 330	1	
R1057	ERJ6GEYG103	M.RESISTOR CH 1/10W 10K	1	
R1058	ERJ6RBD362	M.RESISTOR CH 1/10W 3.6K	1	
R1059	ERJ6RBD471	M.RESISTOR CH 1/10W 470	1	
R1060	ERJ6GEYG103	M.RESISTOR CH 1/10W 10K	1	
R1061	ERJ6GEYG104	M.RESISTOR CH 1/10W 100K	1	
R1062	VRT0033	THERMISTOR	1	D4DDB3310004
R1063	ERJ6GEYG221	M.RESISTOR CH 1/10W 220	1	
R1064,65	ERG2SJ681	M.RESISTOR 2W 680	2	
R1066	ERJ6GEYG331	M.RESISTOR CH 1/10W 330	1	
R1067	ERJ6GEYG121	M.RESISTOR CH 1/10W 120	1	
R1068	ERJ6GEYG103	M.RESISTOR CH 1/10W 10K	1	
R1069	ERJ6RBD682	M.RESISTOR CH 1/10W 6.8K	1	
R1070	ERJ6RBD162	M.RESISTOR CH 1/10W 1.6K	1	
R1071	ERJ6GEYG103	M.RESISTOR CH 1/10W 10K	1	
R1072	ERG3SJ333	M.RESISTOR 3W 33K	1	
R1073	ERG2SJ180	M.RESISTOR 2W 18	1	
R1074	ERJ12YJ470	M.RESISTOR CH 1/2W 47	1	
R1075	ERJ6GEYG104	M.RESISTOR CH 1/10W 100K	1	
R1076	ERW1PKR33	W.RESISTOR 1W 0.33	1	
R1077	ERG3SJ333	M.RESISTOR 3W 33K	1	
R1078	ERG2SJ180	M.RESISTOR 2W 18	1	
R1079	ERJ12YJ390	M.RESISTOR CH 1/2W 39	1	
R1080	ERJ6GEYG104	M.RESISTOR CH 1/10W 100K	1	
R1081	ERW1PKR33	W.RESISTOR 1W 0.33	1	
R1082,83	ERJ6RBD103	M.RESISTOR CH 1/10W 10K	2	
R1084	ERJ6RBD132	M.RESISTOR CH 1/10W 1.3K	1	
R1085,86	ERJ6RBD103	M.RESISTOR CH 1/10W 10K	2	
R1087	ERJ6GEYG103	M.RESISTOR CH 1/10W 10K	1	
R1088	VRE0206	M.RESISTOR	1	D0XGR05J0002
R1089	ERJ14YJ154	M.RESISTOR CH 1/4W 150K	1	ERJ14YJ154U
R1090	ERJ6RBD122	M.RESISTOR CH 1/10W 1.2K	1	
R1091,92	ERJ6RBD103	M.RESISTOR CH 1/10W 10K	2	
R1093,94	ERJ6GEYG103	M.RESISTOR CH 1/10W 10K	2	
R1095	ERX2SZJR10	M.RESISTOR 2W 0.1	1	
R1097	ERJ6GEYG223	M.RESISTOR CH 1/10W 22K	1	
R1098	ERJ6GEYG103	M.RESISTOR CH 1/10W 10K	1	
R1099	ERG3SJ333	M.RESISTOR 3W 33K	1	
⚠ T1001	VLT0899	TRANSFORMER	1	G4D3E0000001
⚠ T1002	VLT0900	TRANSFORMER	1	G4D4E0000001
VR1001,02	VRV0112B501	V.RESISTOR 500	2	
		MISCELLANEOUS		
	VLP0336	FERRITE CORE	8	
	VLP0337	FERRITE CORE	2	
	VLP0394	FERRITE BEAD	3	J0KE00000032
	VSC4779	HEAT SINK (U)	1	

Ref.No.	Part No.	Part Name & Description	Pcs	Remarks
	VSC4778	HEAT SINK (F)	1	
	XYN3+F8FZS	SCREW	13	
	XYN3+F6	SCREW	2	
	VJR1008	EARTH LUG	2	
	XYN3+F10	SCREW	2	
	XYE3+EF8	SCREW	4	
	VSC4707	HEAT SINK	1	
⚠	VMZ2779	INSULATION	1	
	VEE0C18	GND CABLE	1	
	VSC4780	HEAT SINK (D)	1	
	VMZ2919	BARRIER	2	
■ E20	VEP80A58A	POWER INT P.C.BOARD	1	(RTL)
		MISCELLANEOUS		
	VJS4033	CONNECTOR (FEMALE)	2	K1KB06B00023
■ E21	VEP84363A	HP/MIC JACK P.C.BOARD	1	(RTL)
C1-C4	ECUM1E104ZFN	C.CAPACITOR CH 25V 0.1U	4	
C5	EEVHB1C470	E.CAPACITOR 16V 47U	1	
C6-C9	ECUM1E104ZFN	C.CAPACITOR CH 25V 0.1U	4	
C10,11	EEVHB1C470	E.CAPACITOR 16V 47U	2	
C12	ECUM1H330JCN	C.CAPACITOR CH 50V 33P	1	
C13,14	ECUM1E104ZFN	C.CAPACITOR CH 25V 0.1U	2	
C15	ECUM1H330JCN	C.CAPACITOR CH 50V 33P	1	
C16	EEVHP1C100	E.CAPACITOR 16V 10U	1	EEVHP1C100R
D1	MA716	DIODE	1	
D2	MA157A	DIODE	1	
FL1	VLF0941C223	FILTER	1	
FL2-L4	VLF1356	FILTER	3	
FL5,L6	VLF0941C223	FILTER	2	
FL7,L8	VLF1356	FILTER	2	
IC1	NJM78L05UA	IC	1	C0CBADC00010
IC2	NJM2904M	IC	1	
IC3	NJM78L05UA	IC	1	C0CBADC00010
IC4	NJM79L05UA	IC	1	
IC5	NJM2122M	IC	1	
J1,J2	VJJ0378	M6 JACK	2	K2HB103B0019
JP1,P2	VJR1008	EARTH LUG	2	
L1-L4	VLP0147	COIL	4	
P1	VJP1233T	CONNECTOR (MALE) 6P	1	
P2	VJP1234T	CONNECTOR (MALE) 7P	1	K1KA07A00020
R1	ERJ6GEY0R00	M.RESISTOR CH 1/10W 0	1	
R3,R4	ERJ6GEYG220	M.RESISTOR CH 1/10W 22	2	
R5	ERJ6RBD103	M.RESISTOR CH 1/10W 10K	1	
R6	ERJ6RBD122	M.RESISTOR CH 1/10W 1.2K	1	
R8	ERJ6RBD333	M.RESISTOR CH 1/10W 33K	1	
R9	ERJ6RBD132	M.RESISTOR CH 1/10W 1.3K	1	
R10	ERJ6RBD122	M.RESISTOR CH 1/10W 1.2K	1	
R11	ERJ6RBD301	M.RESISTOR CH 1/10W 300	1	
R12	ERJ6GEY0R00	M.RESISTOR CH 1/10W 0	1	
VR1,R2	EVUNCA040A14	V.RESISTOR 10K	2	
		MISCELLANEOUS		

Ref.No.	Part No.	Part Name & Description	Pcs	Remarks
	VMP5137	HEAD PHONE GND ANGLE	1	
	VMP6692	HP/MIC ANGLE	1	
	XTV3+6F	SCREW	2	
■ E22	VEP80B77A	AC HEAD I/F P.C.BOARD	1	(RTL)
P1	VJP2278	CONNECTOR (MALE)	1	K1KA09A00087
P2	VJP3078	CONNECTOR (MALE)	1	
■ E23	VEP82231A	MECH I/F P.C.BOARD	1	(RTL)
C1	ECUX1H561JCV	C.CAPACITOR CH 50V 560P	1	
C2-C5	ECUX1H103KBV	C.CAPACITOR CH 50V 0.01U	4	
C6	EEVHB1C220	E.CAPACITOR 16V 22U	1	
C7	ECUX1H103KBV	C.CAPACITOR CH 50V 0.01U	1	
C8	EEVHB1C470	E.CAPACITOR 16V 47U	1	
C9,10	ECUX1E104ZFV	C.CAPACITOR CH 25V 0.1U	2	
C11	ECUX1H103KBV	C.CAPACITOR CH 50V 0.01U	1	
C12	ECUX1E104ZFV	C.CAPACITOR CH 25V 0.1U	1	
C13,14	EEVHB1C470	E.CAPACITOR 16V 47U	2	
C15	ECUX1H103KBV	C.CAPACITOR CH 50V 0.01U	1	
C20	ECUX1H103KBV	C.CAPACITOR CH 50V 0.01U	1	
C21	ECUX1E104ZFV	C.CAPACITOR CH 25V 0.1U	1	
C22	ECUX1H103KBV	C.CAPACITOR CH 50V 0.01U	1	
C23	ECUX1E104ZFV	C.CAPACITOR CH 25V 0.1U	1	
C26,27	ECUX1H103KBV	C.CAPACITOR CH 50V 0.01U	2	
C28	EEVHB1C220	E.CAPACITOR 16V 22U	1	
C29,30	ECUX1H103KBV	C.CAPACITOR CH 50V 0.01U	2	
C31	EEVHB1C470	E.CAPACITOR 16V 47U	1	
C32,33	ECUX1E104ZFV	C.CAPACITOR CH 25V 0.1U	2	
C34	ECUX1H103KBV	C.CAPACITOR CH 50V 0.01U	1	
C35	ECUX1E104ZFV	C.CAPACITOR CH 25V 0.1U	1	
C36,37	EEVHB1C470	E.CAPACITOR 16V 47U	2	
C40	ECUX1H122KBV	C.CAPACITOR CH 50V 1200P	1	
C41	ECUX1C104KBV	C.CAPACITOR CH 16V 0.1U	1	
C42	ECUX1H103KBV	C.CAPACITOR CH 50V 0.01U	1	
C43	ECUX1H101JCV	C.CAPACITOR CH 50V 100P	1	
C44	ECUX1C105KBM	C.CAPACITOR CH 16V 1U	1	
C45	ECUX1H332KBV	C.CAPACITOR CH 50V 3300P	1	
C101	ECUM1C105ZFN	C.CAPACITOR CH 16V 1U	1	
C102	ECA1HEN101	E.CAPACITOR 50V 100U	1	
C103	ECUX1H103KBV	C.CAPACITOR CH 50V 0.01U	1	
C104-06	ECUX1H101JCV	C.CAPACITOR CH 50V 100P	3	
D1	MA157	DIODE	1	
D2-D5	MA704A	DIODE	4	
IC1,C2	OP177GS	IC	2	
IC3	NJM4580ED	IC	1	C0ABBB000123
IC4-C9	UPC4558G2	IC	6	C0ABBB000131
IC10	NJM78L09UA	IC	1	C0CBAHC00002
IC11	NJM79L09UA	IC	1	C0CABBF00001
IC40	UPC4558G2	IC	1	C0ABBB000131
IC100	NJM2903M	IC	1	
J1,J2	VJR1008	EARTH LUG	2	
L1,L2	VLF0576	FILTER	2	J0HACH000011
P1	VJP3081	CONNECTOR (MALE)	1	
P2	VJP3418A080	CONNECTOR (MALE)	1	K1KA80A00066
P3	VJP3076	CONNECTOR (MALE)	1	
P4	VJP3082	CONNECTOR (MALE)	1	
P11	VJP3172D002	CONNECTOR (MALE)	1	K1KA02B00051

Ref.No.	Part No.	Part Name & Description	Pcs	Remarks
P12	VJP3172D005	CONNECTOR (MALE)	1	K1KA05B00053
P13	VJP3172D002	CONNECTOR (MALE)	1	K1KA02B00051
P14	VJP3172D003	CONNECTOR (MALE)	1	K1KA03B00006
P15	VJP3518B002	CONNECTOR (MALE)	1	
P16	VJP3518B003	CONNECTOR (MALE)	1	
P17	VJS3801B010	CONNECTOR (FEMALE)	1	
P18	VJP3518B002	CONNECTOR (MALE)	1	
P19	VJP3172D002	CONNECTOR (MALE)	1	K1KA02B00051
P20	VJP3518B003	CONNECTOR (MALE)	1	
P21	VJP3518B002	CONNECTOR (MALE)	1	
P22	VJP3172D005	CONNECTOR (MALE)	1	K1KA05B00053
P24	VJP3518B002	CONNECTOR (MALE)	1	
P25	VJP1230T	CONNECTOR (MALE) 3P	1	
P26	VJP1236T	CONNECTOR (MALE) 9P	1	K1KA09A00023
P30	VJP3172D003	CONNECTOR (MALE)	1	K1KA03B00006
P32	VJP3172D004	CONNECTOR (MALE)	1	K1KA04B00007
P33	VJS3422B015	CONNECTOR (FEMALE)	1	
P34,35	VJS2889A017	CONNECTOR (FEMALE)	2	K1MN17A00008
P36	VJS3422B019	CONNECTOR (FEMALE)	1	
P41	VJP3172D002	CONNECTOR (MALE)	1	K1KA02B00051
P48	VJP3125B002	CONNECTOR (MALE)	1	K1KA02B00111
P51	VJP3172D003	CONNECTOR (MALE)	1	K1KA03B00006
P52,53	VJP3172D004	CONNECTOR (MALE)	2	K1KA04B00007
P54,55	VJP3172D002	CONNECTOR (MALE)	2	K1KA02B00051
P56	VJP3172D004	CONNECTOR (MALE)	1	K1KA04B00007
P57	VJP3172D002	CONNECTOR (MALE)	1	K1KA02B00051
P58	VJP3125B002	CONNECTOR (MALE)	1	K1KA02B00111
Q1,Q2	2SB1218A-R	TRANSISTOR	2	
R1	ERJ3GEYJ821	M.RESISTOR CH 1/16W 820	1	
R2,R3	ERJ3GEYJ562	M.RESISTOR CH 1/16W 5.6K	2	
R4	ERJ3RBD562	M.RESISTOR CH 1/16W 5.6K	1	
R5	ERJ3RBD473	M.RESISTOR CH 1/16W 47K	1	
R6	ERJ3RBD562	M.RESISTOR CH 1/16W 5.6K	1	
R7	ERJ3GEYJ562	M.RESISTOR CH 1/16W 5.6K	1	
R8	ERJ3RBD333	M.RESISTOR CH 1/16W 33K	1	
R9	ERJ3GEYJ562	M.RESISTOR CH 1/16W 5.6K	1	
R10	ERJ3RBD562	M.RESISTOR CH 1/16W 5.6K	1	
R11	ERJ3RBD473	M.RESISTOR CH 1/16W 47K	1	
R12,13	ERJ3RBD103	M.RESISTOR CH 1/16W 10K	2	
R14	ERJ3RBD104	M.RESISTOR CH 1/16W 100K	1	
R15	ERJ3RBD823	M.RESISTOR CH 1/16W 82K	1	
R16	ERJ3RBD273	M.RESISTOR CH 1/16W 27K	1	
R17	ERJ3GEYJ273	M.RESISTOR CH 1/16W 27K	1	
R18	ERJ3RBD153	M.RESISTOR CH 1/16W 15K	1	
R19	ERJ3RBD103	M.RESISTOR CH 1/16W 10K	1	
R20	ERJ3GEYG102	M.RESISTOR CH 1/16W 1K	1	
R21	ERJ3RBD183	M.RESISTOR CH 1/16W 18K	1	
R22	ERJ3RBD473	M.RESISTOR CH 1/16W 47K	1	
R23	ERJ3RBD682	M.RESISTOR CH 1/16W 6.8K	1	
R24	ERJ3RBD222	M.RESISTOR CH 1/16W 2.2K	1	
R25	ERJ3RBD391	M.RESISTOR CH 1/16W 390	1	
R36,37	ERJ3GEY0R00	M.RESISTOR CH 1/16W 0	2	
R40	ERJ3GEYJ562	M.RESISTOR CH 1/16W 5.6K	1	
R41	ERJ3GEYJ101	M.RESISTOR CH 1/16W 100	1	
R42	ERJ3GEYJ683	M.RESISTOR CH 1/16W 68K	1	
R43	ERJ3GEYJ183	M.RESISTOR CH 1/16W 18K	1	
R44	ERJ3GEYJ683	M.RESISTOR CH 1/16W 68K	1	
R45	ERJ3GEYJ681	M.RESISTOR CH 1/16W 680	1	
R46	ERJ3GEYJ823	M.RESISTOR CH 1/16W 82K	1	
R50-53	ERJ3GEY0R00	M.RESISTOR CH 1/16W 0	4	
R56,57	ERJ3RBD103	M.RESISTOR CH 1/16W 10K	2	
R58	ERJ3RBD104	M.RESISTOR CH 1/16W 100K	1	
R59	ERJ3RBD823	M.RESISTOR CH 1/16W 82K	1	
R60	ERJ3RBD273	M.RESISTOR CH 1/16W 27K	1	
R61	ERJ3GEYJ273	M.RESISTOR CH 1/16W 27K	1	
R62	ERJ3RBD153	M.RESISTOR CH 1/16W 15K	1	
R63	ERJ3RBD103	M.RESISTOR CH 1/16W 10K	1	
R64	ERJ3GEYG102	M.RESISTOR CH 1/16W 1K	1	
R65	ERJ3RBD473	M.RESISTOR CH 1/16W 47K	1	
R66	ERJ3RBD183	M.RESISTOR CH 1/16W 18K	1	
R67,68	ERJ3GEY0R00	M.RESISTOR CH 1/16W 0	2	
R69	ERJ3RBD222	M.RESISTOR CH 1/16W 2.2K	1	
R70	ERJ3RBD682	M.RESISTOR CH 1/16W 6.8K	1	

Ref.No.	Part No.	Part Name & Description	Pcs	Remarks
R71	ERJ3RBD391	M.RESISTOR CH 1/16W 390	1	
R72,73	ERJ3GEY0R00	M.RESISTOR CH 1/16W 0	2	
R100	ERJ3GEYJ473	M.RESISTOR CH 1/16W 47K	1	
R101	ERJ3GEYJ105	M.RESISTOR CH 1/16W 1M	1	
R102	ERJ3GEYJ473	M.RESISTOR CH 1/16W 47K	1	
R103	ERJ3GEYG472	M.RESISTOR CH 1/16W 4.7K	1	
R104	ERJ3GEYG332	M.RESISTOR CH 1/16W 3.3K	1	
R105	ERJ3GEYJ103	M.RESISTOR CH 1/16W 10K	1	
R106	ERJ3GEYJ223	M.RESISTOR CH 1/16W 22K	1	
R107,08	ERJ3GEYJ221	M.RESISTOR CH 1/16W 220	2	
R109,10	ERJ3GEY0R00	M.RESISTOR CH 1/16W 0	2	
R111,12	ERJ3GEYJ221	M.RESISTOR CH 1/16W 220	2	
VR1	EVMECSA00B24	V.RESISTOR 20K	1	
VR2	EVMECSA00B54	V.RESISTOR 50K	1	
VR3	EVMECSA00B24	V.RESISTOR 20K	1	
VR4	EVMECSA00B54	V.RESISTOR 50K	1	
VR100,01	EVMECSA00B24	V.RESISTOR 20K	2	
■ E24	VEP80856A	CARRIGE P.C.BOARD	1	(RTL)
P1	VJP1249T	CONNECTOR (MALE) 9P	1	K1KA09B00028
P2	VJS2889A012	CONNECTOR (FEMALE)	1	
P3	VJS2889A016	CONNECTOR (FEMALE)	1	
R1-R7	ERDS2TJ221	C.RESISTOR 1/4W 220	7	
■ E25	VEP83533A	VIDEO REAR P.C.BOARD	1	(RTL)
C1	ECUX1H103KBV	C.CAPACITOR CH 50V 0.01U	1	
C2	EEVHB1C470	E.CAPACITOR 16V 47U	1	
C3,C4	ECUX1H103KBV	C.CAPACITOR CH 50V 0.01U	2	
C5	EEVHB1C470	E.CAPACITOR 16V 47U	1	
C6-C8	ECUX1H103KBV	C.CAPACITOR CH 50V 0.01U	3	
C9	ECUX1H101JCV	C.CAPACITOR CH 50V 100P	1	
C10	ECUX1H270JCV	C.CAPACITOR CH 50V 27P	1	
C11,12	ECUX1H103KBV	C.CAPACITOR CH 50V 0.01U	2	
C13	ECUX1H101JCV	C.CAPACITOR CH 50V 100P	1	
C14	ECUX1H270JCV	C.CAPACITOR CH 50V 27P	1	
C15,16	ECUX1H103KBV	C.CAPACITOR CH 50V 0.01U	2	
C17	ECUX1H101JCV	C.CAPACITOR CH 50V 100P	1	
C18	ECUX1H270JCV	C.CAPACITOR CH 50V 27P	1	
C19,20	ECUX1H103KBV	C.CAPACITOR CH 50V 0.01U	2	
C21	ECUX1H101JCV	C.CAPACITOR CH 50V 100P	1	
C22	ECUX1H270JCV	C.CAPACITOR CH 50V 27P	1	
C23,24	ECUX1H103KBV	C.CAPACITOR CH 50V 0.01U	2	
C25	ECUX1H101JCV	C.CAPACITOR CH 50V 100P	1	
C26	ECUX1H270JCV	C.CAPACITOR CH 50V 27P	1	
C100	ECUX1H103KBV	C.CAPACITOR CH 50V 0.01U	1	
C101	EEVHB1C470	E.CAPACITOR 16V 47U	1	
C102,03	ECUX1H103KBV	C.CAPACITOR CH 50V 0.01U	2	
C104	EEVHB1C470	E.CAPACITOR 16V 47U	1	
C105,06	ECUX1H103KBV	C.CAPACITOR CH 50V 0.01U	2	
C107	EEVHB1C470	E.CAPACITOR 16V 47U	1	
C108,09	ECUX1H103KBV	C.CAPACITOR CH 50V 0.01U	2	
C110	EEVHB1C470	E.CAPACITOR 16V 47U	1	
C111-13	ECUX1H103KBV	C.CAPACITOR CH 50V 0.01U	3	
C114	ECUX1H101JCV	C.CAPACITOR CH 50V 100P	1	
C115	ECUX1H270JCV	C.CAPACITOR CH 50V 27P	1	
C116,17	ECUX1H103KBV	C.CAPACITOR CH 50V 0.01U	2	
C118	ECUX1H101JCV	C.CAPACITOR CH 50V 100P	1	
C119	ECUX1H270JCV	C.CAPACITOR CH 50V 27P	1	
C120,21	ECUX1H103KBV	C.CAPACITOR CH 50V 0.01U	2	
C122	ECUX1H101JCV	C.CAPACITOR CH 50V 100P	1	
C123	ECUX1H270JCV	C.CAPACITOR CH 50V 27P	1	

Ref.No.	Part No.	Part Name & Description	Pcs	Remarks
C124,25	ECUX1H103KBV	C.CAPACITOR CH 50V 0.01U	2	
C126	ECUX1H101JCV	C.CAPACITOR CH 50V 100P	1	
C127	ECUX1H270JCV	C.CAPACITOR CH 50V 27P	1	
C128,29	ECUX1H103KBV	C.CAPACITOR CH 50V 0.01U	2	
C130	ECUX1H101JCV	C.CAPACITOR CH 50V 100P	1	
C131	ECUX1H270JCV	C.CAPACITOR CH 50V 27P	1	
C132,33	ECUX1H103KBV	C.CAPACITOR CH 50V 0.01U	2	
C134	ECUX1H101JCV	C.CAPACITOR CH 50V 100P	1	
C135	ECUX1H270JCV	C.CAPACITOR CH 50V 27P	1	
D1-D3	MA151K	DIODE	3	
D4	MA3130-L	DIODE	1	
D5	MA151K	DIODE	1	
D6	MA3130-L	DIODE	1	
D7	MA151K	DIODE	1	
D8	MA3130-L	DIODE	1	
D9	MA151K	DIODE	1	
D10	MA3130-L	DIODE	1	
D11	MA151K	DIODE	1	
D12	MA3130-L	DIODE	1	
D100-03	MA151K	DIODE	4	
D104-09	MA3130-L	DIODE	6	
IC1	NJM78L09UA	IC	1	C0CBAHC00002
IC2	NJM79L09UA	IC	1	C0CABBF00001
IC100	NJM78L09UA	IC	1	C0CBAHC00002
IC101	NJM79L09UA	IC	1	C0CABBF00001
IC102	NJM78L09UA	IC	1	C0CBAHC00002
IC103	NJM79L09UA	IC	1	C0CABBF00001
J1	VJS3902	CONNECTOR (FEMALE)	1	K1CB204H0002
J2-J5	VJS3874	CONNECTOR (FEMALE)	4	K1CB204H0003
J6,J7	VJS3902	CONNECTOR (FEMALE)	2	K1CB204H0002
JP1-P3	VJR1008	EARTH LUG	3	
P1	VJP2540A040	CONNECTOR (MALE)	1	K1KA40A00039
Q1	2SA1022-C	TRANSISTOR	1	
Q2,Q3	2SD601A-R	TRANSISTOR	2	
Q4	2SA1022-C	TRANSISTOR	1	
Q5,Q6	2SD601A-R	TRANSISTOR	2	
Q7	2SA1022-C	TRANSISTOR	1	
Q8,Q9	2SD601A-R	TRANSISTOR	2	
Q10	2SA1022-C	TRANSISTOR	1	
Q11,12	2SD601A-R	TRANSISTOR	2	
Q13	2SA1022-C	TRANSISTOR	1	
Q14,15	2SD601A-R	TRANSISTOR	2	
Q100	2SB709A-R	TRANSISTOR	1	
Q101,02	2SD601A-R	TRANSISTOR	2	
Q103	2SB709A-R	TRANSISTOR	1	
Q104,05	2SD601A-R	TRANSISTOR	2	
Q106	2SB709A-R	TRANSISTOR	1	
Q107,08	2SD601A-R	TRANSISTOR	2	
Q109	2SB709A-R	TRANSISTOR	1	
Q110,11	2SD601A-R	TRANSISTOR	2	
Q112	2SB709A-R	TRANSISTOR	1	
Q113,14	2SD601A-R	TRANSISTOR	2	
Q115	2SB709A-R	TRANSISTOR	1	
Q116,17	2SD601A-R	TRANSISTOR	2	
R1	ERJ6RED750	M.RESISTOR CH 1/10W 75	1	
R2	ERJ6GEYG470	M.RESISTOR CH 1/10W 47	1	
R3	ERJ6GEYJ334	M.RESISTOR CH 1/10W 330K	1	
R4	ERJ6GEYG332	M.RESISTOR CH 1/10W 3.3K	1	
R5	ERJ6GEYG470	M.RESISTOR CH 1/10W 47	1	
R6	ERJ6GEYG222	M.RESISTOR CH 1/10W 2.2K	1	
R7,R8	ERJ6GEYG221	M.RESISTOR CH 1/10W 220	2	
R9	ERJ6GEY0R00	M.RESISTOR CH 1/10W 0	1	
R11	ERJ6RED750	M.RESISTOR CH 1/10W 75	1	
R12	ERJ6GEYG470	M.RESISTOR CH 1/10W 47	1	
R13	ERJ6GEYJ334	M.RESISTOR CH 1/10W 330K	1	
R14	ERJ6GEYG332	M.RESISTOR CH 1/10W 3.3K	1	
R15	ERJ6GEYG470	M.RESISTOR CH 1/10W 47	1	
R16	ERJ6GEYG222	M.RESISTOR CH 1/10W 2.2K	1	

Ref.No.	Part No.	Part Name & Description	Pcs	Remarks
R17,18	ERJ6GEYG221	M.RESISTOR CH 1/10W 220	2	
R19	ERJ6GEY0R00	M.RESISTOR CH 1/10W 0	1	
R21	ERJ6RED750	M.RESISTOR CH 1/10W 75	1	
R22	ERJ6GEYG470	M.RESISTOR CH 1/10W 47	1	
R23	ERJ6GEYJ334	M.RESISTOR CH 1/10W 330K	1	
R24	ERJ6GEYG332	M.RESISTOR CH 1/10W 3.3K	1	
R25	ERJ6GEYG470	M.RESISTOR CH 1/10W 47	1	
R26	ERJ6GEYG222	M.RESISTOR CH 1/10W 2.2K	1	
R27,28	ERJ6GEYG221	M.RESISTOR CH 1/10W 220	2	
R29	ERJ6GEY0R00	M.RESISTOR CH 1/10W 0	1	
R31	ERJ6RED750	M.RESISTOR CH 1/10W 75	1	
R32	ERJ6GEYG470	M.RESISTOR CH 1/10W 47	1	
R33	ERJ6GEYJ334	M.RESISTOR CH 1/10W 330K	1	
R34	ERJ6GEYG332	M.RESISTOR CH 1/10W 3.3K	1	
R35	ERJ6GEYG470	M.RESISTOR CH 1/10W 47	1	
R36	ERJ6GEYG222	M.RESISTOR CH 1/10W 2.2K	1	
R37,38	ERJ6GEYG221	M.RESISTOR CH 1/10W 220	2	
R39	ERJ6GEY0R00	M.RESISTOR CH 1/10W 0	1	
R41	ERJ6RED750	M.RESISTOR CH 1/10W 75	1	
R42	ERJ6GEYG470	M.RESISTOR CH 1/10W 47	1	
R43	ERJ6GEYJ334	M.RESISTOR CH 1/10W 330K	1	
R44	ERJ6GEYG332	M.RESISTOR CH 1/10W 3.3K	1	
R45	ERJ6GEYG470	M.RESISTOR CH 1/10W 47	1	
R46	ERJ6GEYG222	M.RESISTOR CH 1/10W 2.2K	1	
R47,48	ERJ6GEYG221	M.RESISTOR CH 1/10W 220	2	
R49	ERJ6GEY0R00	M.RESISTOR CH 1/10W 0	1	
R51-53	ERJ3GEY0R00	M.RESISTOR CH 1/16W 0	3	
R100	ERJ6GEYG223	M.RESISTOR CH 1/10W 22K	1	
R101	ERJ6GEYG182	M.RESISTOR CH 1/10W 1.8K	1	
R102	ERJ6GEYG470	M.RESISTOR CH 1/10W 47	1	
R103	ERJ6GEYG222	M.RESISTOR CH 1/10W 2.2K	1	
R104,05	ERJ6GEYG221	M.RESISTOR CH 1/10W 220	2	
R106	ERJ6GEYG222	M.RESISTOR CH 1/10W 2.2K	1	
R107	ERJ6RED750	M.RESISTOR CH 1/10W 75	1	
R108	ERJ6GEYG223	M.RESISTOR CH 1/10W 22K	1	
R109	ERJ6GEYG182	M.RESISTOR CH 1/10W 1.8K	1	
R110	ERJ6GEYG470	M.RESISTOR CH 1/10W 47	1	
R111	ERJ6GEYG222	M.RESISTOR CH 1/10W 2.2K	1	
R112,13	ERJ6GEYG221	M.RESISTOR CH 1/10W 220	2	
R114	ERJ6GEYG222	M.RESISTOR CH 1/10W 2.2K	1	
R115	ERJ6RED750	M.RESISTOR CH 1/10W 75	1	
R116	ERJ6GEYG223	M.RESISTOR CH 1/10W 22K	1	
R117	ERJ6GEYG182	M.RESISTOR CH 1/10W 1.8K	1	
R118	ERJ6GEYG470	M.RESISTOR CH 1/10W 47	1	
R119	ERJ6GEYG222	M.RESISTOR CH 1/10W 2.2K	1	
R120,21	ERJ6GEYG221	M.RESISTOR CH 1/10W 220	2	
R122	ERJ6GEYG222	M.RESISTOR CH 1/10W 2.2K	1	
R123	ERJ6RED750	M.RESISTOR CH 1/10W 75	1	
R124	ERJ6GEYG223	M.RESISTOR CH 1/10W 22K	1	
R125	ERJ6GEYG182	M.RESISTOR CH 1/10W 1.8K	1	
R126	ERJ6GEYG470	M.RESISTOR CH 1/10W 47	1	
R127	ERJ6GEYG222	M.RESISTOR CH 1/10W 2.2K	1	
R128,29	ERJ6GEYG221	M.RESISTOR CH 1/10W 220	2	
R130	ERJ6GEYG222	M.RESISTOR CH 1/10W 2.2K	1	
R131	ERJ6RED750	M.RESISTOR CH 1/10W 75	1	
R132	ERJ6GEYG223	M.RESISTOR CH 1/10W 22K	1	
R133	ERJ6GEYG182	M.RESISTOR CH 1/10W 1.8K	1	
R134	ERJ6GEYG470	M.RESISTOR CH 1/10W 47	1	
R135	ERJ6GEYG222	M.RESISTOR CH 1/10W 2.2K	1	
R136,37	ERJ6GEYG221	M.RESISTOR CH 1/10W 220	2	
R138	ERJ6GEYG222	M.RESISTOR CH 1/10W 2.2K	1	
R139	ERJ6RED750	M.RESISTOR CH 1/10W 75	1	
R140	ERJ6GEYG223	M.RESISTOR CH 1/10W 22K	1	
R141	ERJ6GEYG182	M.RESISTOR CH 1/10W 1.8K	1	
R142	ERJ6GEYG470	M.RESISTOR CH 1/10W 47	1	
R143	ERJ6GEYG222	M.RESISTOR CH 1/10W 2.2K	1	
R144,45	ERJ6GEYG221	M.RESISTOR CH 1/10W 220	2	
R146	ERJ6GEYG222	M.RESISTOR CH 1/10W 2.2K	1	
R147	ERJ6RED750	M.RESISTOR CH 1/10W 75	1	
R148-53	ERJ6GEYG221	M.RESISTOR CH 1/10W 220	6	
R154-59	ERJ6GEYG470	M.RESISTOR CH 1/10W 47	6	
SW1,W2	VSS0307	SWITCH	2	K0D122A00105

Ref.No.	Part No.	Part Name & Description	Pcs	Remarks
■ E26	VEP84362B	AUDIO REAR P.C.BOARD	1	(RTL)
C1-12	ECUM1H103ZFN	C.CAPACITOR CH 50V 0.01U	12	
J1-J4	VJS3417	CONNECTOR (FEMALE)	4	K1AB103A0007
J5-10	VJP3417	CONNECTOR (MALE)	6	K1AA103A0003
J11	VJS3417	CONNECTOR (FEMALE)	1	K1AB103A0007
J13,14	VJS3417	CONNECTOR (FEMALE)	2	K1AB103A0007
J15,16	VJP3417	CONNECTOR (MALE)	2	K1AA103A0003
JP1-P4	VJR1008	EARTH LUG	4	
L1-L8	VLP0147	COIL	8	
L17-20	VLP0147	COIL	4	
L33-52	VLP0147	COIL	20	
L55	VLP0147	COIL	1	
L58-68	VLP0147	COIL	11	
P1	VJP2741A014	CONNECTOR (MALE)	1	K1KA14A00119
P2	VJP2741A022	CONNECTOR (MALE)	1	K1KA22A00041
P3	VJP2741A020	CONNECTOR (MALE)	1	K1KA20A00056
■ E27	VEP80A63A	FAN I/F P.C.BOARD	1	(RTL)
D1,D2	SEL2910D	DIODE	2	B3ADA0000074
P1	VJP1247T	CONNECTOR (MALE)	1	
P2	VJP1245T	CONNECTOR (MALE)	1	
P3	VJP1243T	CONNECTOR (MALE) 3P	1	
P4-P6	VJP1230T	CONNECTOR (MALE) 3P	3	
W1	VWJ0121	CABLE	1	
		MISCELLANEOUS		
	VMX2188130	SPACER	2	K9ZZ00000647
■ E28	VEP80A62A	RESET SW P.C.BOARD	1	(RTL)
P7	VJP1243T	CONNECTOR (MALE) 3P	1	
R1	VWJ0121	CABLE	1	
SW1	VSP0881	SWITCH	1	K0F122A00134
		MISCELLANEOUS		
	VJS4033	CONNECTOR (FEMALE)	2	K1KB06B00023
■ E29	VEP80A72A	MAIN POWER LED P.C.BOARD	1	(RTL)
D3	LN376GPX	DIODE	1	
P8	VJP1243R	CONNECTOR (MALE)	1	K1KA03B00088
R2	ERDS2TJ181	C.RESISTOR 1/4W 180	1	

Ref.No.	Part No.	Part Name & Description	Pcs	Remarks
		MISCELLANEOUS		
	VMX2188020	SPACER	1	K9ZZ00000721
■ E30	VEP80A70A	PC POWER SW P.C.BOARD	1	(RTL)
D1,D2	SEL2910D	DIODE	2	B3ADA0000074
P1	VJP1247T	CONNECTOR (MALE)	1	
P2	VJP1245T	CONNECTOR (MALE)	1	
P3	VJP1243T	CONNECTOR (MALE) 3P	1	
P4-P6	VJP1230T	CONNECTOR (MALE) 3P	3	
P9	VJP1243T	CONNECTOR (MALE) 3P	1	
R3	ERDS2TJ680	C.RESISTOR 1/4W 68	1	
SW2	VSP0881	SWITCH	1	K0F122A00134
W1	VWJ0121	CABLE	1	
		MISCELLANEOUS		
	VMX2188130	SPACER	2	K9ZZ00000647
■ E31	VEP80C17A	PC FAN I/F P.C.BOARD	1	(RTL)
P1-P3	VJP1230T	CONNECTOR (MALE) 3P	3	
P4	VJP1232T	CONNECTOR (MALE) 5P	1	
■ E32	VEP80B93A	SCSI MOTHER P.C.BOARD	1	(RTL)
C1	ECUX1E104KBN	C.CAPACITOR CH 25V 0.1U	1	
C2	EEVHB1E330P	E.CAPACITOR 25V 33U	1	
C3,C4	ECUX1E104KBN	C.CAPACITOR CH 25V 0.1U	2	
C5	EEVHB1C470	E.CAPACITOR 16V 47U	1	
C6,C7	ECUX1E104KBN	C.CAPACITOR CH 25V 0.1U	2	
C8	EEVHB1E330P	E.CAPACITOR 25V 33U	1	
C9,10	ECUX1E104KBN	C.CAPACITOR CH 25V 0.1U	2	
C11	EEVHB1C470	E.CAPACITOR 16V 47U	1	
C12	ECUX1E104KBN	C.CAPACITOR CH 25V 0.1U	1	
C13	EEVHB1E330P	E.CAPACITOR 25V 33U	1	
C14	ECUX1E104KBN	C.CAPACITOR CH 25V 0.1U	1	
C15	EEVHB1E330P	E.CAPACITOR 25V 33U	1	
C16	ECUX1E104KBN	C.CAPACITOR CH 25V 0.1U	1	
C17	EEVHB1C470	E.CAPACITOR 16V 47U	1	
C18	ECUX1E104KBN	C.CAPACITOR CH 25V 0.1U	1	
C19	EEVHB1C470	E.CAPACITOR 16V 47U	1	
C20	ECUX1E104KBN	C.CAPACITOR CH 25V 0.1U	1	
C21,22	EEVHB1E4R7	E.CAPACITOR 25V 4.7U	2	
C23	ECUX1E104KBN	C.CAPACITOR CH 25V 0.1U	1	
C24,25	EEVHB1E4R7	E.CAPACITOR 25V 4.7U	2	
C51	ECUX1E104KBN	C.CAPACITOR CH 25V 0.1U	1	
C52	EEVHB1E330P	E.CAPACITOR 25V 33U	1	
C53,54	ECUX1E104KBN	C.CAPACITOR CH 25V 0.1U	2	
C55	EEVHB1C470	E.CAPACITOR 16V 47U	1	
C56,57	ECUX1E104KBN	C.CAPACITOR CH 25V 0.1U	2	
C58	EEVHB1E330P	E.CAPACITOR 25V 33U	1	
C59,60	ECUX1E104KBN	C.CAPACITOR CH 25V 0.1U	2	
C61	EEVHB1C470	E.CAPACITOR 16V 47U	1	

Ref.No.	Part No.	Part Name & Description	Pcs	Remarks
C62	ECUX1E104KBN	C.CAPACITOR CH 25V 0.1U	1	
C63	EEVHB1E330P	E.CAPACITOR 25V 33U	1	
C64	ECUX1E104KBN	C.CAPACITOR CH 25V 0.1U	1	
C65	EEVHB1E330P	E.CAPACITOR 25V 33U	1	
C66	ECUX1E104KBN	C.CAPACITOR CH 25V 0.1U	1	
C67	EEVHB1C470	E.CAPACITOR 16V 47U	1	
C68	ECUX1E104KBN	C.CAPACITOR CH 25V 0.1U	1	
C69	EEVHB1C470	E.CAPACITOR 16V 47U	1	
C70	ECUX1E104KBN	C.CAPACITOR CH 25V 0.1U	1	
C71	EEVHB1E4R7	E.CAPACITOR 25V 4.7U	1	
C72	EEVHB1E330P	E.CAPACITOR 25V 33U	1	
C73	ECUX1E104KBN	C.CAPACITOR CH 25V 0.1U	1	
C74	EEVHB1E330P	E.CAPACITOR 25V 33U	1	
C75	ECUX1E104KBN	C.CAPACITOR CH 25V 0.1U	1	
C76	EEVHB1C470	E.CAPACITOR 16V 47U	1	
C77	ECUX1E104KBN	C.CAPACITOR CH 25V 0.1U	1	
C78	EEVHB1C470	E.CAPACITOR 16V 47U	1	
C79	ECUX1E104KBN	C.CAPACITOR CH 25V 0.1U	1	
C80	EEVHB1E4R7	E.CAPACITOR 25V 4.7U	1	
C81	ECUX1E104KBN	C.CAPACITOR CH 25V 0.1U	1	
C82,83	EEVHB1E4R7	E.CAPACITOR 25V 4.7U	2	
C100-09	ECUM1H681KBN	C.CAPACITOR CH 50V 680P	10	
C110-27	ECUX1E104KBN	C.CAPACITOR CH 25V 0.1U	18	
FL1-L6	VLF0931	FILTER	6	F1Y2A1030001
FL51-58	VLF0931	FILTER	8	F1Y2A1030001
IC1-C3	UCC5672	IC	3	
IC51-53	UCC5672	IC	3	
IC100-04	MC14538BF	IC	5	C0JBAM000009
IC105-07	SN74LS05NS	IC	3	
J1-J3	VJR1095	LUG TERMINAL	3	
P1	VJP2278	CONNECTOR (MALE)	1	K1KA09A00087
P1	VJS4087	CONNECTOR (FEMALE)	1	K1KB68A00005
P2	VJP3078	CONNECTOR (MALE)	1	
P4	VJS4176	CONNECTOR (FEMALE)	1	K1KB80A00046
P5	VJP3341	CONNECTOR (MALE)	1	
P51	VJS4087	CONNECTOR (FEMALE)	1	K1KB68A00005
P52-54	VJS4176	CONNECTOR (FEMALE)	3	K1KB80A00046
P55	VJP3341	CONNECTOR (MALE)	1	
P101	VJP1234T	CONNECTOR (MALE) 7P	1	K1KA07A00020
P102	VJP1231T	CONNECTOR (MALE) 4P	1	
P102	VJP1247T	CONNECTOR (MALE)	1	
P104	VJP1243T	CONNECTOR (MALE) 3P	1	
P104	VJP1244T	CONNECTOR (MALE) 4P	1	
P105	VJP1230T	CONNECTOR (MALE) 3P	1	
P105	VJP1232T	CONNECTOR (MALE) 5P	1	
P108	VJP1236T	CONNECTOR (MALE) 9P	1	K1KA09A00023
P108	VJP1245T	CONNECTOR (MALE)	1	
P109	VJP1231T	CONNECTOR (MALE) 4P	1	
R5	ERJ3GEY0R00	M.RESISTOR CH 1/16W 0	1	
R7	ERJ6GEY0R00	M.RESISTOR CH 1/10W 0	1	
R8	ERJ3GEY0R00	M.RESISTOR CH 1/16W 0	1	
R9	ERJ6GEY0R00	M.RESISTOR CH 1/10W 0	1	
R11	ERJ6GEYG203	M.RESISTOR CH 1/10W 20K	1	
R12	ERJ3GEY0R00	M.RESISTOR CH 1/16W 0	1	
R16	ERJ3GEY0R00	M.RESISTOR CH 1/16W 0	1	
R19	ERJ3GEY0R00	M.RESISTOR CH 1/16W 0	1	
R55	ERJ3GEY0R00	M.RESISTOR CH 1/16W 0	1	
R57	ERJ6GEY0R00	M.RESISTOR CH 1/10W 0	1	
R58	ERJ3GEY0R00	M.RESISTOR CH 1/16W 0	1	
R59	ERJ6GEY0R00	M.RESISTOR CH 1/10W 0	1	
R61	ERJ6GEYG203	M.RESISTOR CH 1/10W 20K	1	
R62	ERJ3GEY0R00	M.RESISTOR CH 1/16W 0	1	
R66	ERJ3GEY0R00	M.RESISTOR CH 1/16W 0	1	
R69	ERJ3GEY0R00	M.RESISTOR CH 1/16W 0	1	
R100-09	ERJ6GEYG103	M.RESISTOR CH 1/10W 10K	10	
R110-19	ERJ6GEYG224	M.RESISTOR CH 1/10W 220K	10	
R120,21	ERJ6GEYG103	M.RESISTOR CH 1/10W 10K	2	
R122	ERJ6GEY0R00	M.RESISTOR CH 1/10W 0	1	
R123-32	ERJ6GEYG103	M.RESISTOR CH 1/10W 10K	10	
R133	ERJ6GEY0R00	M.RESISTOR CH 1/10W 0	1	

Ref.No.	Part No.	Part Name & Description	Pcs	Remarks
TG54	VJR0646	TEST POINT	1	D0X0R0000022
TP1	EYF6CU	TEST POINT	1	
TP51	EYF6CU	TEST POINT	1	
■ E33	VEP80A50A	EJECT P.C.BOARD	1	(RTL)
P1	VJP3440A012	CONNECTOR (MALE)	1	K1KA12A00056
P2	VJP3440B010	CONNECTOR (MALE)	1	K1KA10B00043
Q1	UN2214	TRANSISTOR-RESISTOR	1	
R1	ERJ6GEYG181	M.RESISTOR CH 1/10W 180	1	
SW1	VSP0864C001	SWITCH	1	K0F111A00274
■ E34	VEP80A51A	FRONT LED P.C.BOARD	1	(RTL)
D1,D2	LN376GPX	DIODE	2	
D3	SEL2510G	DIODE	1	B3ABA0000359
D4	SEL2910D	DIODE	1	B3ADA0000074
D5	SEL2710Y	DIODE	1	B3ACA0000173
D6	SEL2510G	DIODE	1	B3ABA0000359
D7,D8	SEL2910D	DIODE	2	B3ADA0000074
P1	VJP3440A010	CONNECTOR (MALE)	1	K1KA10A00089
Q1-Q7	UN2213	TRANSISTOR-RESISTOR	7	
R1-R8	ERJ6GEYG181	M.RESISTOR CH 1/10W 180	8	
		MISCELLANEOUS		
	VMX2188020	SPACER	8	K9ZZ00000721

SECTION 2

SERVICE INFORMATION

CONTENTS

2-1. SERVICING FIXTURES & TOOLS INF-1
2-2. ALIGNMENT TAPE INF-4
2-3. LIST OF RECOMMENDED MEASURING INSTRUMENTS INF-5
2-4. MAINTENANCE INF-6
2-5. MANUAL TAPE EJECT(EMERGENCY EJECT) INF-8
2-6. CYLINDER HEAD CLEANING METHOD INF-11
2-7. CONNECTION OF THE SERVICE FRONT PANEL UNIT INF-12
2-8. DIAG-MENU DISPLAY INF-13
2-9. SOFTWARE VERSION DISPLAY INF-16
2-10. SOFTWARE VERSION UPGRADE METHOD INF-17
2-11. ERROR RATE DISPLAY AND CONFIRMATION METHOD INF-37
2-12. INTERNAL SWITCH SETTING METHOD INF-38
2-13. INTERNAL LED INDICATION INF-40
2-14. SERVICE MENU INF-43
2-15. SERVICE MENU CONTENTS INF-44
2-16. SETUP INF-75
2-17. CIRCUIT BOARD LAYOUT DRAWING INF-114

1. SERVICING FIXTURES & TOOLS

NO	NEW	PART NO.	FIXTURE & TOOL NAME	REMARK
1		VFK1145A	Back Tension Meter (T2-M30-P)	
2		VFK1149A	Post Driver	
3		VFK71A	Dial Torque Gauge (1.5cN·m)	150g
4		VFK1191A	Dial Torque Gauge (0.45 cN·m)	45g
5		VFK1152	Dial Torque Gauge Adapter	
6		VFK0357	Eccentric Screwdriver (1.5mm)	
7		VFK1154	Post Height Fixtur	
8		VFK1586	Neutral Posiotion Plate	for LCassette
9		VFK1587	Neutral Posiotion Tool (w/ hole)	
10		VFK1588	Neutral Posiotion Tool (w/o hole)	
11		VFK1150	Nut Driver (5.5mm)	
12		VFK1188A	Dial Tension Gauge (300mN)	30g
13		VFK0948A	Check Light	
14		VFK0749	Froiral Grease	for plastics
15		MOR265	Morlytone Grease	for metal
16		VFK1146	Philips Driver (Fine) (00-75)	
17		VFK1147	Philips Driver (Fine) (00-100)	
18		VFK1148	Hex. Driver (1.5mm)	
19		VFK1178	Hex. Driver (0.89mm)	
20		VFK1179	Hex. Driver (0.71mm)	
21		VFK1589	A/C Head Fixture	
22		VFK1209A	Torque Driver (4 cN·m-30 cN·m)	0.4 kgf·cm -3kgf·cm
23		VFK0912	Post Axis Driver (1.5mm)	
24		VFM3580KM	DVCPRO Alignment Tape (No.1) for NTSC	or VFM3580KL
25		VFM3581KM	DVCPRO Alignment Tape (No.2) for NTSC	or VFM3581KL
26		VFM3582KM	DVCPRO Alignment Tape (No.3) for NTSC	or VFM3582KL
27		VFM3380KM	DVCPRO 50 Alignment Tape for NTSC	
28		AJ-CL12MP	Cleaning Tape	SALES Route
29		VFK1369	Tape Beg./End Detection Cassette	
30		VFK1481B	LISTA Software	
31		VFK1186	LISTA Cable	
32		VFK1192	F Extender Board	for F1, F5, F6, F7
33		VFK1383	F Extender Board (2)	for F2, F4
34		VFK1193	H Extender Board	for H1, H3, H4, H5, H6, H7
35		VFK1248E	Flash Memory Version up Software	
36		VFK1503	Servo Version up Software	
37		VFK1304A	Flash Memory Version up Tool	
38		VZZ0095	Cleaning Close	
39		VYP7583	Service Front Panel Unit	
40		VFK1590	CPLD WRITER	

1 VFK1145
BackTensionMeter

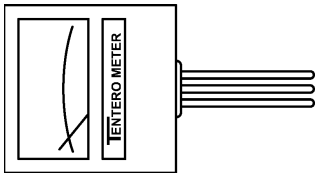

2 VFK1149A
Post Driver

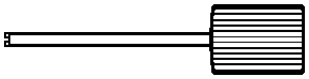

3 VFK71A
4 VFK1191A
Dial Torque Gauge

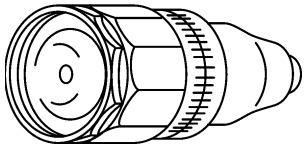

5 VFK1152
Dial Torque Gauge Adapter

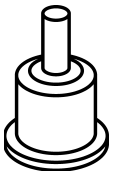

6 VFK0357 (1.5mm)
Eccentric Screwdriver

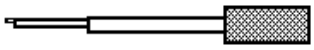

7 VFK1154
Post Height Fixtur

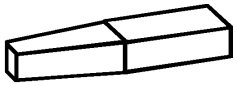

8 VFK1586
Neutral Posiotion Plate

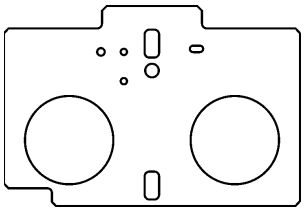

9 VFK1587
Neutral Posiotion Tool (w/ hole)

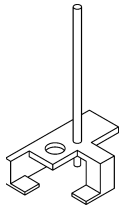

10 VFK1588
Neutral Posiotion Tool (w/o hole)

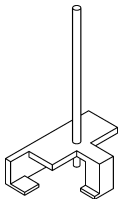

11 VFK1150
Nut Driver (5.5mm)

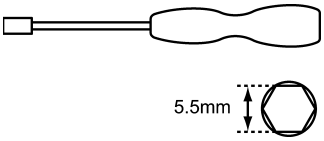

12 VFK1188A
Dial Tension Gauge

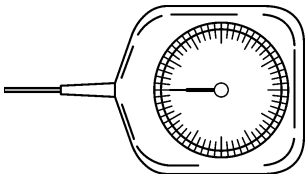

13 VFK0948A
Check Light

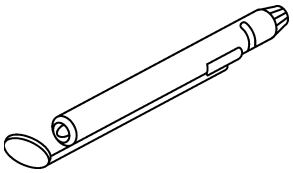

14 VFK0749
Froiral Grease (for plastics)

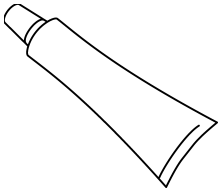

15 MOR265
Morlytone Grease (for metal)

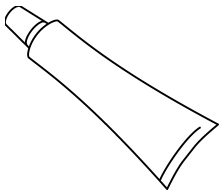

16 VFK1146 (00X75)
17 VFK1147 (00X100)
Philips Driver (Fine)

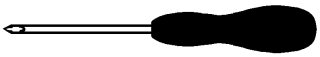

18 VFK1148 (1.5mm)
19 VFK1178 (0.89mm)
20 VFK1179 (0.71mm)
Hex. Driver

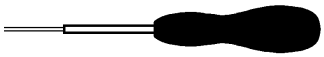

21 VFK1589
A/C Head Fixture

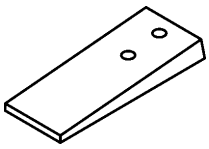

22 VFK1209A
Torque Driver

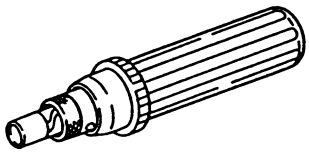

23 VFK0912
Post Axis Driver (1.5mm)

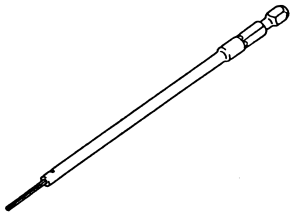

24 **VFM3580KM or L**
25 **VFM3581KM or L**
26 **VFM3582KM or L**
DVCPRO
Alignment Tape

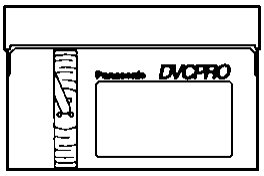

27 **VFM3380KM**
DVCPRO 50
Alignment Tape (NTSC)

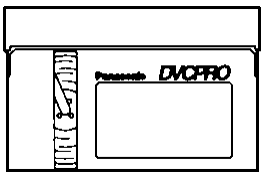

28 **AJ-CL12MP**
Cleaning Tape

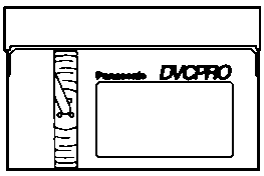

29 **VFK1369**
Tape Beg./End
Detection Cassette

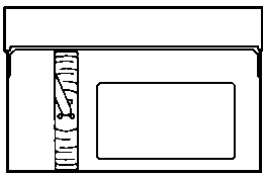

30 **VFK1481A**
LISTASoftware

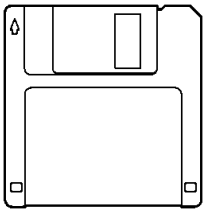

31 **VFK1186**
LISTA Cable

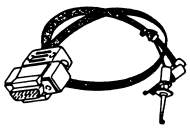

32 **VFK1192**
F Extender Board

33 **VFK1383**
F Extender Board(2)

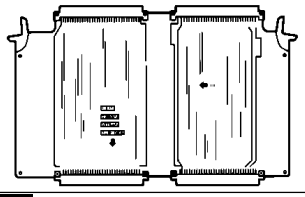

34 **VFK1193**
H Extender Board

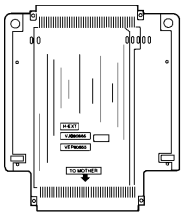

35 **VFK1248E**
Flash Memory
Version up Software

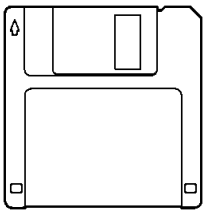

36 **VFK1503**
Servo Version up
Software

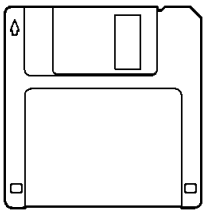

37 **VFK1304A**
Flash Memory Version up Tool
(VFK1304 includes the flexible cable
"VWJ20E5500L0".)

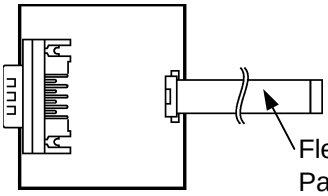

38 **VZZ0095**
Cleaning Cloth

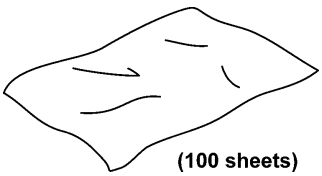

39 **VYP7583**
Service Fromt Panel
Unit

40 **VFK1590**
CPLD WRITER

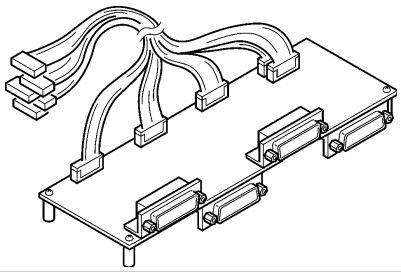

2. Alignment Tape

2-1. VFM3580KM / L (NTSC) (25 M adjustment tape)

TIME (min.)	VIDEO		PCM AUDIO		CUE	
	Signal	Purpose	Signal	Purpose	Signal	Purpose
0:00	Color bar SMPTE(75%)	Confirmation of the composite video level	1KHz –20dB	Confirmation of the audio level	1KHz 0VU	Confirmation of the cue level
7:00	Color bar (100%)	Confirmation of the composite video level				
14:00	H sweep	Frequency characteristic			6KHz 0VU	A/C head azimuth adjustment
18:00	Bow tie (500K)	Y/C timing				
22:00	Pulse & bar	Y/C timing			300, 500, 1K 2K, 4K, 6KHz	Frequency characteristic
26:00	Area marker	Video start timing			-----	-----

2-2. VFM3581KM / L (NTSC) (Manufacturer (LISTA) adjustment tape)

TIME (min.)	VIDEO		PCM AUDIO		CUE	
	Signal	Purpose	Signal	Purpose	Signal	Purpose
0:00	ITI pattern	Linearity adjustment	-----	-----	-----	-----

2-3. VFM3582KM / L (NTSC) (Manufacturer (X-value) adjustment tape)

TIME (min.)	VIDEO		PCM AUDIO		CUE	
	Signal	Purpose	Signal	Purpose	Signal	Purpose
0:00	Color bar (75%) (with drop-out track)	X-value adjustment	-----	-----	6KHz 10VU	X-value adjustment

2-4. VFM3380KM (NTSC) (50 M adjustment tape)

TIME (min.)	VIDEO		PCM AUDIO		CUE	
	Signal	Purpose	Signal	Purpose	Signal	Purpose
0:00	Color bar (with teletext) (100%)	Confirmation of video level and teletext level	1KHz –20dB	Confirmation of the audio level	1KHz 0VU	Confirmation of the cue level
4:00	Color bar (SMPTE) (75%)	Confirmation of the video level				
7:00	Multiburst (Y/Pb/Pr)	Frequency characteristic				
10:00	Multiburst (only Y)	Y-frequency characteristic				
13:00	Bow tie	Y/C timing				
16:00	Area marker	Video start timing				

3. List of Recommended Measuring Instruments

MODEL NO. (Example)	NAME	REMARK
TSG1910 (NTSC)	NTSC analog composite signal generator	Tectronix
1760 (op. SC) or 1780R	SCH meter (NTSC)	
	Waveform monitor (NTSC)	
	Vector scope (NTSC)	
	Oscilloscope	
	Digital voltmeter (D.V.M.)	
	Frequency counter	
	Audio noise meter	
	Audio analyzer	
	Spectrum analyzer	

4. Maintenance

4-1. Maintenance Schedule

Maintenance is done by periodically performing suitable maintenance servicing in order to maintain the functions always in the best condition, so that the user can use the equipment safely. Video equipment with mounted mechanisms uses wear parts, and their wear and deterioration causes troubles. Dust and dirt also can impair stable operation. For this reason it is important to not just perform repair at the time of trouble, but to perform suitable maintenance at regular intervals.

	Part name	Part No.	Hours of use (unit: hours)				
			Every 1000	3000	6000	9000	12,000
-	Cleaning of the travel system	-----	C: Every 500 hours				
-	Mechanical chassis unit	VXY1607Z1					R
1	Cylinder Unit	VEG1530		R	R	R	IM
2	Pinch Arm Unit	VXL3040	R, G	R, G	R, G	R, G	IM
3	Cleaning Arm Unit	VXL3028	R	R	R	R	IM
4	S Reel Motor Unit	VEM0724			R		IM
5	T Reel Motor Unit	VEM0731			R		IM
6	Capstan Unit	VEM0717			R		IM
7	S Loading Unit	VXA6646			R, G		IM
8	T Loading Unit	VXA6648			R, G		IM
9	S4 Post Base Unit	VXA6688			R		IM
10	S Tension Arm Unit	VXL3005			R		IM
11	T5 Arm (1) Unit	VXL2976			R, G		IM
12	T6 Arm Unit	VXL2977			R		IM
13	Mode SW Unit	VES0925			R		IM
14	A/C Head 1 Unit	VED0466					IM
15	Motor Unit	VEM0726					IM
16	Reel Drive Motor Unit	VEM0585					IM
17	Pinch Solenoid	VSJ0227					IM
18	S Brake Solenoid	VSJ0216					IM
19	T Brake Solenoid	VSJ0216					IM
20	MIC SW Unit	VXA6199					IM
21	Cleaner Solenoid	VSJ0226					IM
22	Main Cam Cear	VDG1424					IM
23	M Stopper Solenoid	VSJ0216					IM
-	Front-loading unit	VXA6593					R
-	Slot-in motor	VRD5597					F
-	SYSTEM Haed Disk	VSI3615	Exchange after every 10,000 h or 2 years (OPERATION time)				
-	SCSI Hard Disk	N3CBBPB00007	Exchange after every 10,000 h or 2 years (OPERATION time)				
-	Fan motor	VRF0190	Exchange after every 30,000 h (OPERATION time)				
-	CPU Fan motor	VEK9275	Exchange after every 40,000 h (OPERATION time)				

Exchange of the mechanical chassis unit is recommended for the 12,000 h maintenance.

C : Perform cleaning.
R : Assembly subject to exchange.
G : At the time of exchange, wipe off the old grease and apply new grease. (Morlytone grease)
IM : Included in the mechanical chassis unit.
When the mechanical chassis unit is not exchanged, exchange as a single part is required.
F : Included in the front-loading unit.

<Note:>

The Hours of use indicates the cylinder rotation time (DRUM RUN).
The maintenance execution time shown in the chart is recommendation for standard maintenance execution. This is not the life of the various parts. The life is influenced by temperature, humidity, dust, etc.
Please refer to the most recent execution outline, as the maintenance specifications and the part numbers may change.

4-2. Layout of the Maintenance Parts

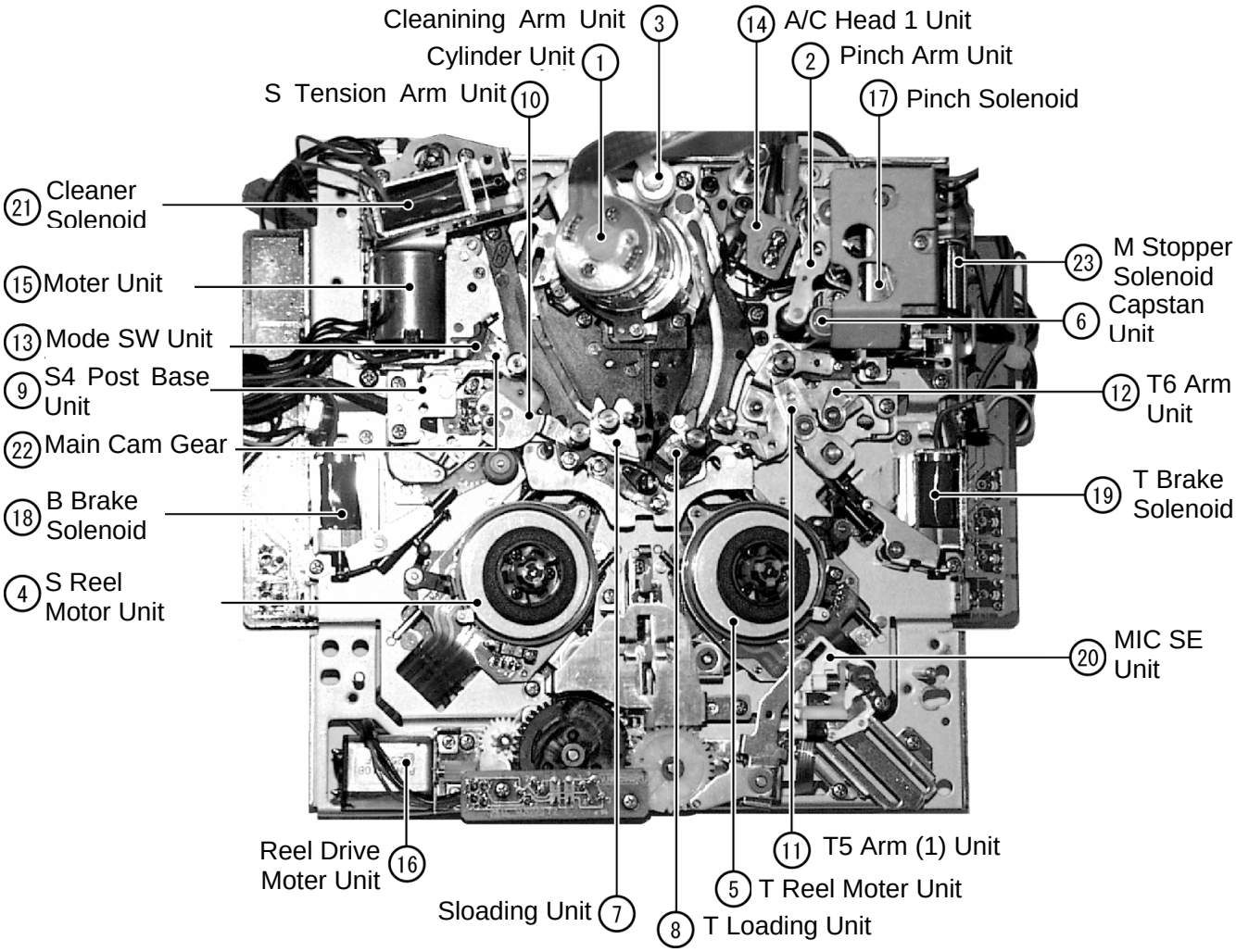

5. MANUAL TAPE EJECT(EMERGENCY EJECT)

Turn the tape can not be ejected by normal operation because of trouble of the electrical system or the mechanical system, the tape can be removed from the unit manually by means of the following method.

1. Switch off the power and remove the upper cover.
2. Use a cross-slot screw driver to push in the red plastic **gear (A)** and turn it **counterclockwise**. At this time, the tape winding mechanism operates at the same time, so that the latch sound will be heard, but turning for about 10 turns should be done in this condition. (Excessive turning can place a load onto the tape and can cause tape damage.)
3. Confirm unloading for each post and that the tape has been stored completely in the cassette.
4. When the tape has returned completely into the cassette case, push the red plastic **gear (B)** at the front of the cassette down motor work gear, and turn it clockwise to remove the cassette. (Take care that the tape is not caught when the cassette lid closes.)

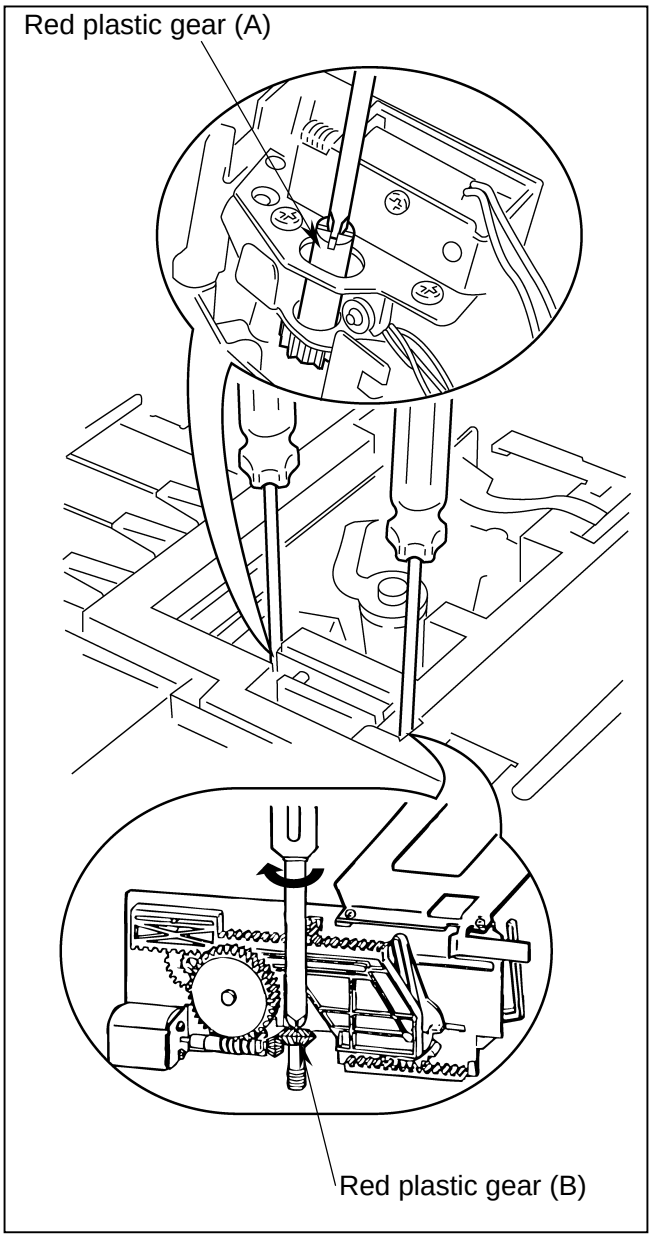

6. Cylinder Head Cleaning Method

The cylinder head of this unit has a 3-piece construction (top, center, and bottom), and only the center cylinder with head chips rotates. Accordingly, head cleaning must be performed while rotating only the center cylinder as follows.

NOTE: At the time of cleaning, use sufficient care not to touch the head or the cleaning roller with bare hands.

1. Turn off power.
2. Dip cloth into De-natural Alcohol.
3. Use a flat screwdriver to remove the white cap from the upper part of the cylinder, paying attention not to drop it. (Refer to the following figure.)

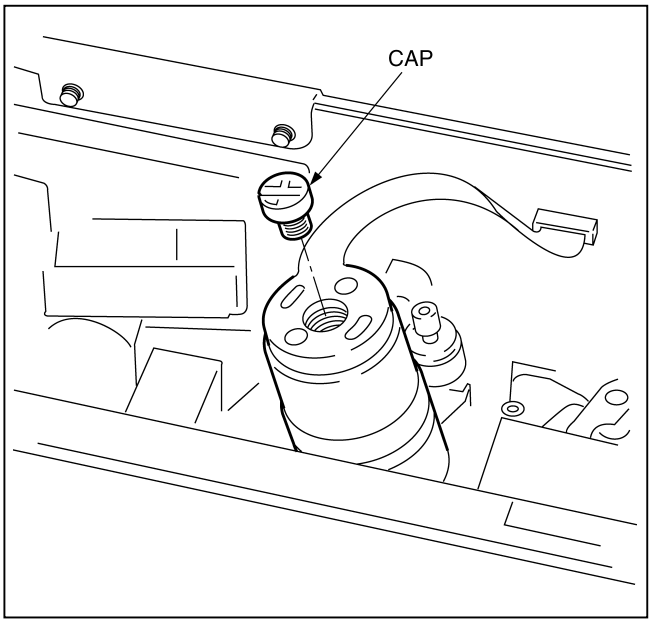

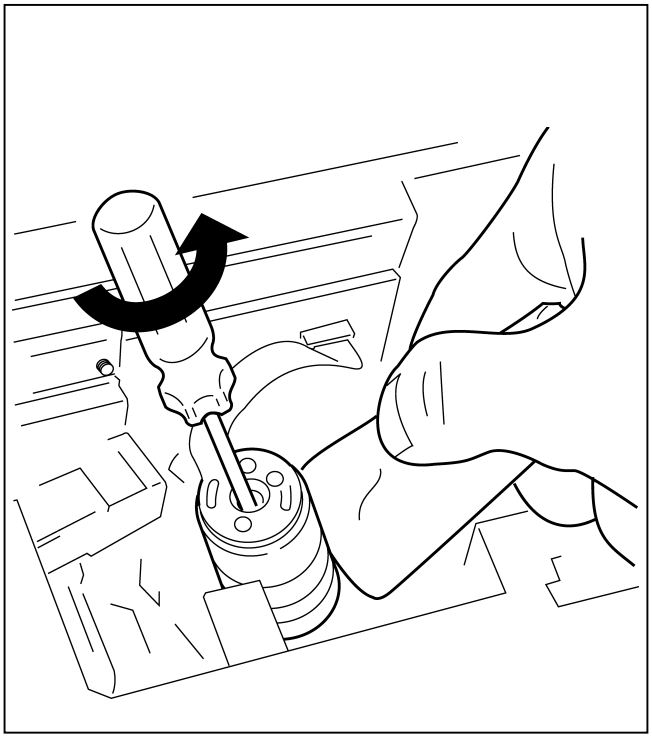

4. Press cleaning cloth gently against the center cylinder, insert a flat screwdriver into the hole at the center of the cylinder, and rotate the center cylinder counter-clockwise to clean. Repeat cleaning procedure until all residue is removed from Cylinder Head.

NOTE: Before inserting the screwdriver into the cylinder, confirm that the center cylinder isn't rotating.
Pay attention not to press screwdriver to much when it is inserted.

Cleaning Liquid & Cleaning Cloth.

- Use ethanol (more than 99% purity) as cleaning liquid.
- Use the clean cloth for cleaning purpose. Do not use any dirty cloth.
- The Cleaning Cloth can be ordered as spare part.
- The part number indicated as below.
  CLEANING CLOTH : VZZ0095

7. Connection of the Service Front Panel Unit

For a machnical and /or electrical adjustment, connect the Service Front Panel Unit (VYP7583) with the AJ-DE97 by the following procedure:

1. Turn off the AJ-DE97.
2. Remove the Right Side Panel.
3. Connect P32in the AJ-DE97 to the Service Front Panel Unit.
4. Turn on the AJ-DE97.

* AJ-D960P/E front panel can be used for that instead of the Service Front Panel Unit .

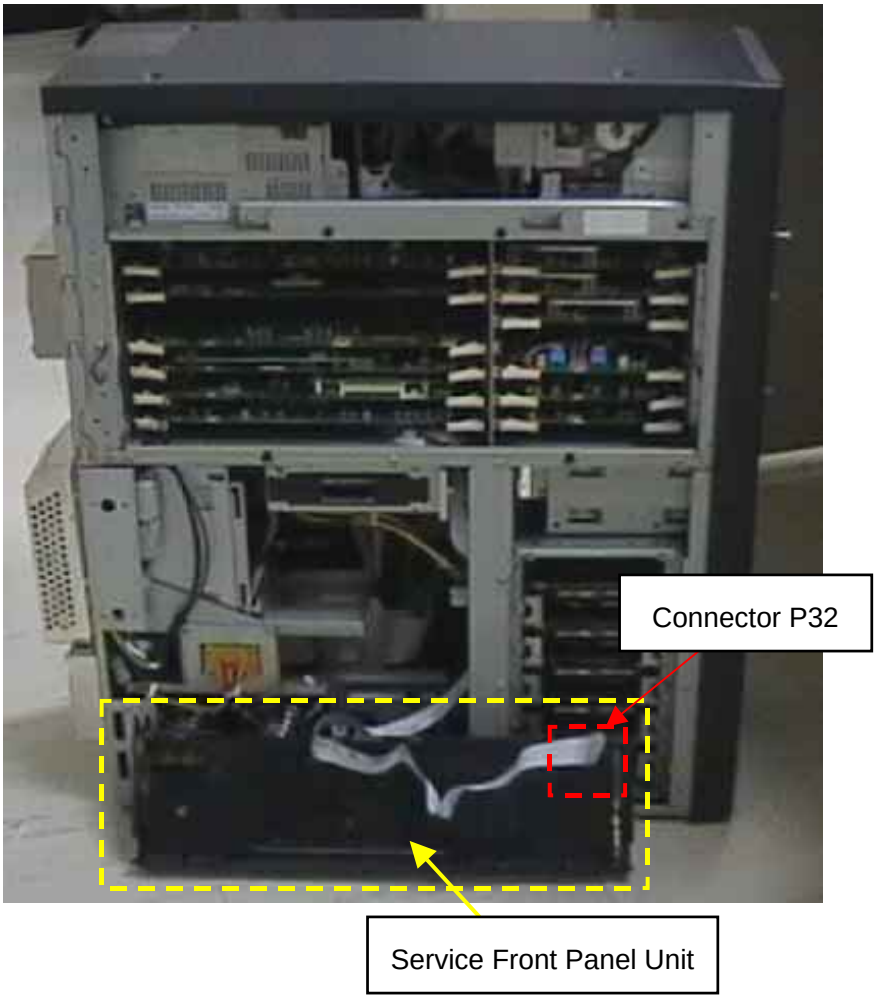

8. DIAG-MENU Display

The **DIAG-MENU** is the menu for investigating the status of the VTR, and it has the warning display (WARNING) and the hour meter display (HOURS METER).

8-1. DIAG-MENU Operation Method

1. Connect the Service Front Panel Unit to AJ-DE97.
   Refer to **" 7, *Connection of the Service Front Panel Unit"*** in ***"Section 2. Service Information"***.
2. Open the door at the lower part of the front panel and press the "**DIAG**" button.
3. "**DIAG-MENU**" will be displayed on the video monitor (VIDEO OUT3, SERIAL OUT3) and on the counter display (front panel).
4. The display switches between the warning information and the hour meter information each time the **search button** is pressed.
5. When the "**DIAG**" button is pressed again, it returns to the normal screen.

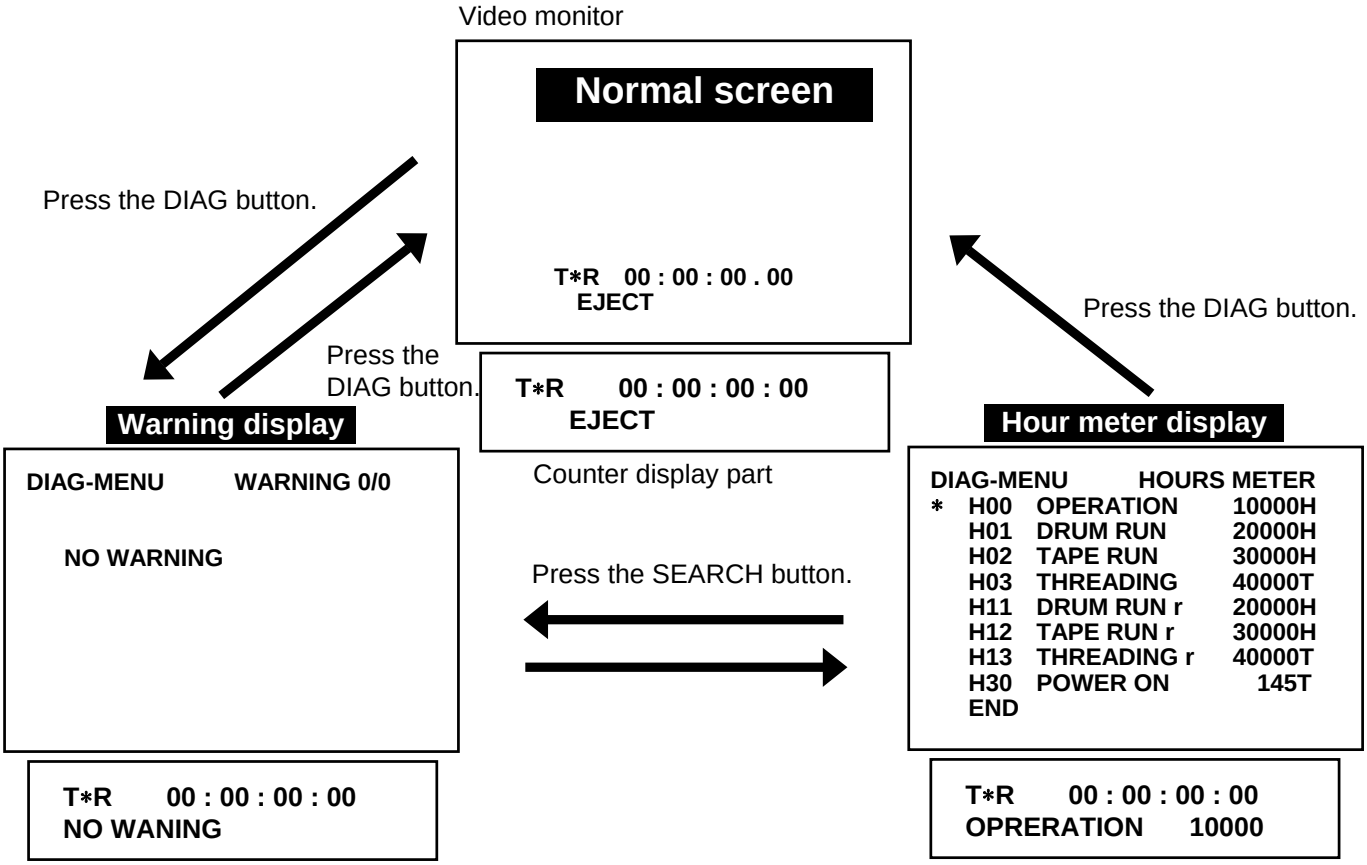

8-2. Hour Meter Display

1. When the search dial is turned during hour meter display, the operation hours for each item can be confirmed on the counter display part (front panel).

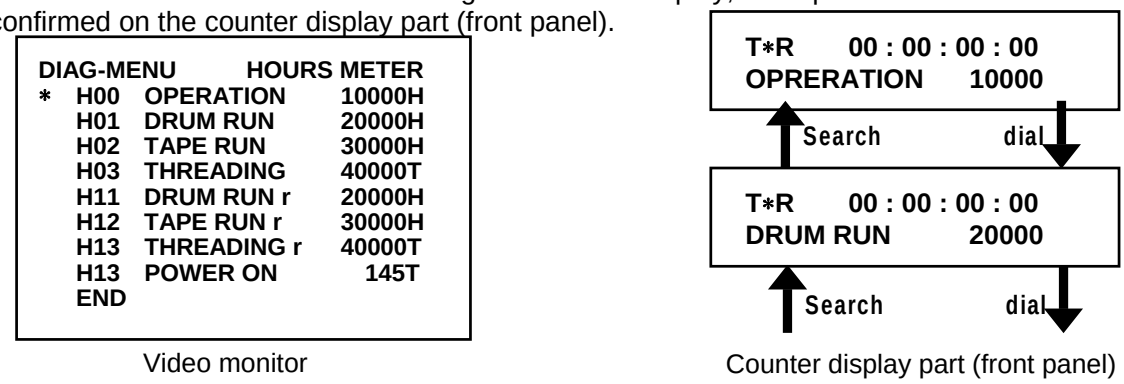

8-3. How to Reset Hour Meter

A. All Hour Meter Reset

1.Eject a cassette Tape.
2.Turn off the main power.
3.Set the switches on the SYSCON board as shown bellow.
SW900-1 = ON SW900-2 = ON
4.Turn on the main power.
5.Push the **"EJECT"** button.
6.Push the "**DIAG**" botton.
7.Push the "**SERCH**" button.
8.Push the "**RESET**" button to display the figure shown right below.
9.Push the "**PLAY**" button to reset the selected item.
10.Turn off the main power.
11.Set the switches on the SYSCON board as shown bellow.
SW900-1 = OFF SW900-2 = OFF

```
DIAG-MENU        HOURS METER
*  H00  OPERATION      10000H
   H01  DRUM RUN       20000H
   H02  TAPE RUN       30000H
   H03  THREADING      40000T
   H11  DRUM RUN r     20000H
   H12  TAPE RUN r     30000H
   H13  THREADING r    40000T
   H13  POWER ON         145T
   END
```

→

```
HOURS METER INIT SET

ALL   OK?
  YES <PLAY> / NO<STOP>
```

B. Hour Meter Reset

1. Eject a cassette Tape.
2. Turn off the main power.
3. Set the switches on the SYSCON board as shown bellow.
SW900-1 = ON SW900-2 = OFF
4. Turn on the main power.
5. Push the **"EJECT"** button.
6. Push the "**DIAG**" botton.
7. Push the "**SERCH**" button.
8. After the following figure displayed move "*" to the item to reset.
(only H11, H12, H13 with "r" can be reset)
9. .Push the "**RESET**" button to display the figure shown right below.
10.Push the "**PLAY**" button to reset the selected item.
11.Turn off the main power.
12.Set the switches on the SYSCON board as shown bellow.
SW900-1 = OFF SW900-2 = OFF

```
DIAG-MENU        HOURS METER
   H00  OPERATION      10000H
   H01  DRUM RUN       20000H
   H02  TAPE RUN       30000H
   H03  THREADING      40000T
*  H11  DRUM RUN r     20000H
   H12  TAPE RUN r     30000H
   H13  THREADING r    40000T
   H13  POWER ON         145T
   END
```

→

```
HOURS METER INIT SET

DRUM RUN r    OK?
  YES <PLAY> / NO<STOP>
```

8-4. Warning message

- A warning message is displayed whenever some malfunction occurs.
- When multiple warning occur, the descriptions for each warning can be checked by turning the search dial.

Priority	Cunter display and Monitir display	Description	VTR operation
1	FAN STOP	This is displayed when the fan motor stops.	Operation continues
2	NO RF	This is displayed when a blank section (tape blank) lasting for one or more seconds is detected during playback. • No head outputs • No playback data readout • No CTL	Operation continues
3	SERVO NOT LOCKED	This is displyaed when the servo is unlocked for more than three seconds during playback, recording, or editing.	Operation continues
4	LOW RF	This is displayed when envelope level is being approximately 1/3 of normal level is detected for more than one second during playback, recording, or editing.	Operation continues
5	HIGH ERROR RATE	This is displayed when the error rate increases and corection / interpolation is performed on either the video or audio playback signal.	Operation continues

9. Software Version Display

9-1. Version Display Operation Procedure

1. Connect the Service Front Panel Unit to AJ-DE97.
   Refer to **“ 7, *Connection of the Service Front Panel Unit”*** in ***“Section 2. Service Information”***.
2. Press the “**EJECT**” button. (If a tape is inserted, eject it.)
3. When the “**PLAY**” button and the “**STOP**” button are pressed simultaneously, the version will be displayed on the counter display part (front panel) while these buttons are being pressed.
4. When the “**PLAY**” button and the “**STOP**” button are pressed again, the software version for each item can be confirmed.

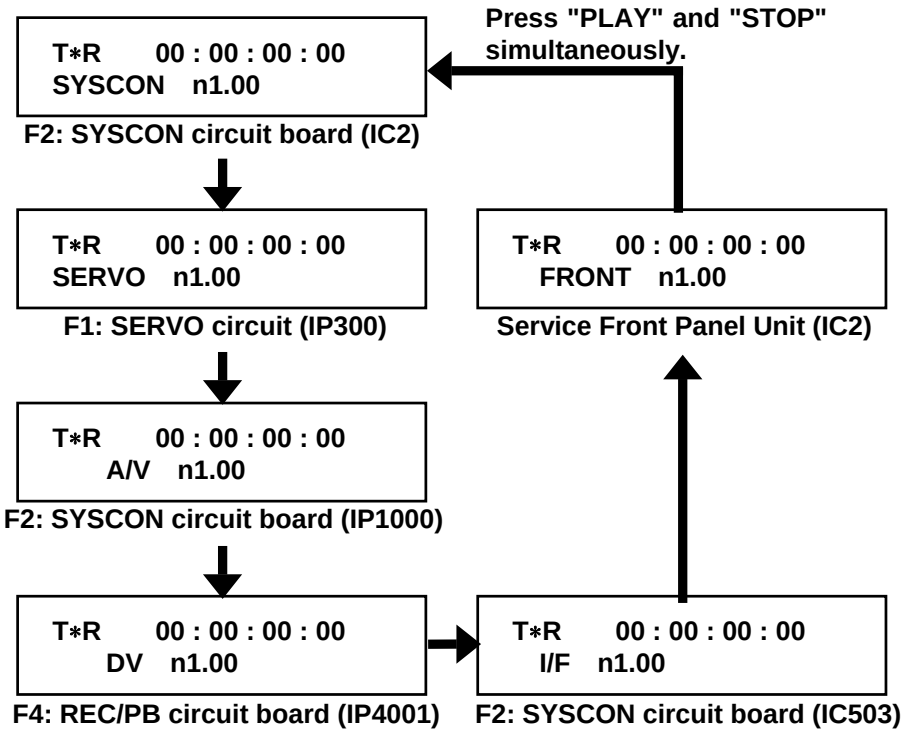

Counter display part (front panel)

9-2. How to Read the Version Display

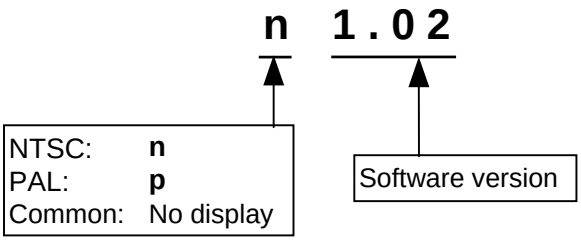

10. Software Version Upgrade Method

10-1. Version Upgrade for the SERVO Microcomputer with Built-in Flash Memory

The SERVO microcomputer of the **F1: SERVO** circuit board has a built-in flash memory. For the software version up, connect the "**Flash memory version up tool (VFK1304A)**" to the tool connection connector and use the "**Servo version up software (VFK1503)**" according to the following procedure.

F1: SERVO circuit board

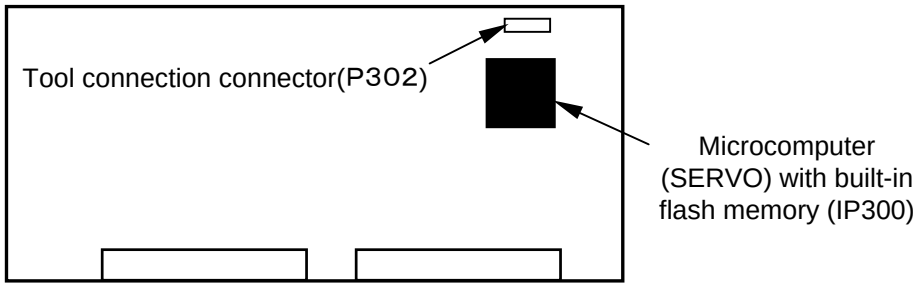

1. Prepare a personal computer (MS-DOS, Windows 95 or 98).
2. Copy the servo version up software (VFK1503) and the new servo microcomputer software into the same directory of the personal computer. (The following four types of software.)

Version up software (VFK1503)	**"fw103u.exe"**
	"t4056z_25.obf"
Servo microcomputer software	**"vsiXXXX.bat"**
	"vsiXXXX.ex"

3. Confirm the switch settings for the "Flash memory version up tool (VFK1304A)".

SW1-1: ON	**SW1-3: OFF**
SW1-2: ON	**SW1-4: OFF**

4. Connect the AJ-DE97, the "Flash memory version up tool (VFK1304A)", and the personal computer as shown below. Pay attencion not to confuse the connection direction (rear, front) for the flat cable of the tool (VFK1304A).

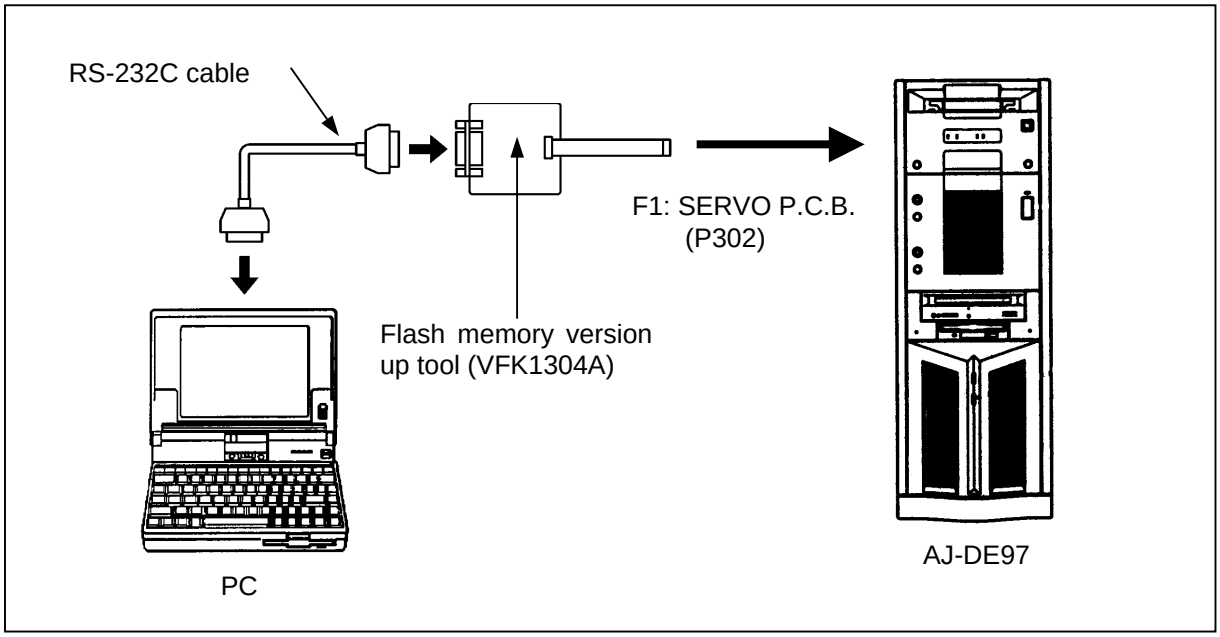

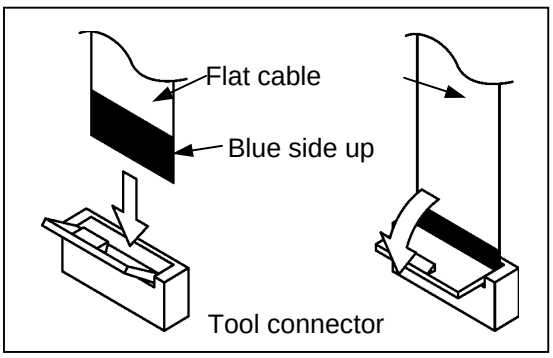

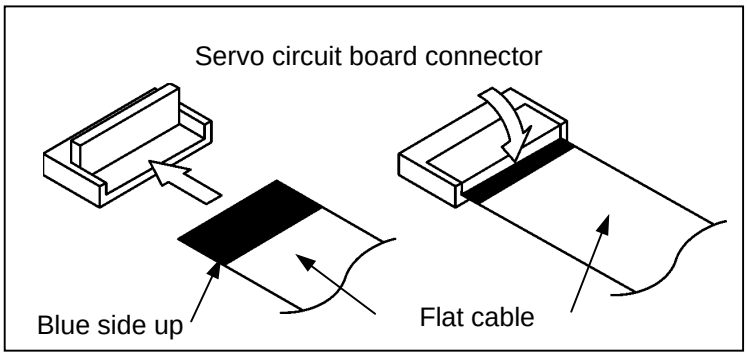

5. Turn on the AJ-DE97 power.
6. Execute the “**VSIXXX.bat**” copied in the personal computer. It also can be dome directly on Windows. (During execution, the file “servo.exe” will be created, but this may be left in the directory without any problems.)
7. When the following screen is displayed, enter “Y” and press “**ENTER**”. (During program writing, the progress is shown on the display of the personal computer.)

```
/=== MN103004 FLASH ROM VERSION UP SOFTWARE ===/

        1 file(s) copied

/=== Initializing ===/
Could not record flash memory exchange record.
Do you continue ? Y/N > Y_
```

8. Writing is completed when the following screen appears.

```
fw103> #--- âtâëâbâVâàé|¦8æé½ìRé|é≡äné▀é▄éπ ---
fw103> load servo.ex
Ex format file analysis ...
start loading

Zero writing before erase .
Erase block .
0x00002000 - 0x00003fff writing
0x00004000 - 0x00005fff writing
0x00006000 - 0x00007fff writing
0x00008000 - 0x00009fff writing
0x0000a000 - 0x0000bfff writing
0x0000c000 - 0x0000dfff writing
0x0000e000 - 0x0000ffff writing
0x00010000 - 0x00011fff writing
0x00012000 - 0x00013fff writing
0x00014000 - 0x00015fff writing
0x00016000 - 0x00017fff writing
0x00018000 - 0x00019fff writing
0x0001a000 - 0x0001bfff writing
0x0001c000 - 0x0001dfff writing

Load finished
fw103> q
```

9. Turn off the AJ-DE97 power and disconnect the cables connected.

10-2. Version Upgrade for a Microcomputer with Built-in A/V, DV Flash Memory

The microcomputer (A/V, DV) of the circuit boards **F2: SYSCON** and **F4: REC PB** has built-in flash memory. For the software version up, connect the "**Flash memory version up tool (VFK1304A)**" to the tool connection connector and use the "**Flash memory version up software (VFK1248E)**".

F2: SYSCON circuit board

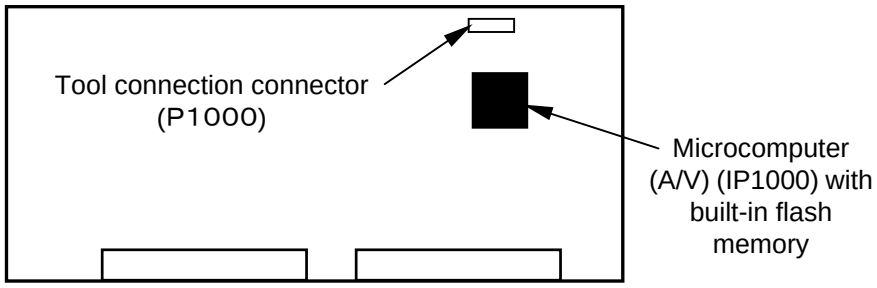

F4: REC PB circuit board

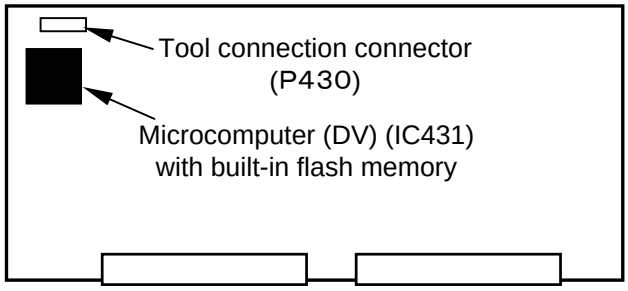

10-2-1. Version Upgrade Preparations

1. Items required for flash memory writing

Flash memory version up software ····· **VFK1248E**

NOTE: The old version software (VFK1248A) can not be used.

Flash memory version up tool ····· **VFK1304A**

Personal computer compatible with Windows 95/98

RS-232C cable (9-pin cross-cable)

2. Installation of the flash memory version up software

Copy the following file to any directory on a personal computer.
(After execution of the software, an ".INI" file will be created in the same directory as the program file, but this may be left or may be deleted as desired.)

Program file ····· **VSI2312E.EXE**

3. Setting of the flash memory version up tool

Confirm the switch settings of the "flash memory version up tool (VFK1304A)".

SW1-1: ON	**SW1-3: OFF**
SW1-2: ON	**SW1-4: OFF**

4. Connection of the flash memory version up tool

Turn off the power of AJ-DE97 and the personal computer and then connect them as shown in the following figure. Pay attention not to confuse the connection direction (rear, front) for the flat cable of the flash memory version up tool (VFK1304A).

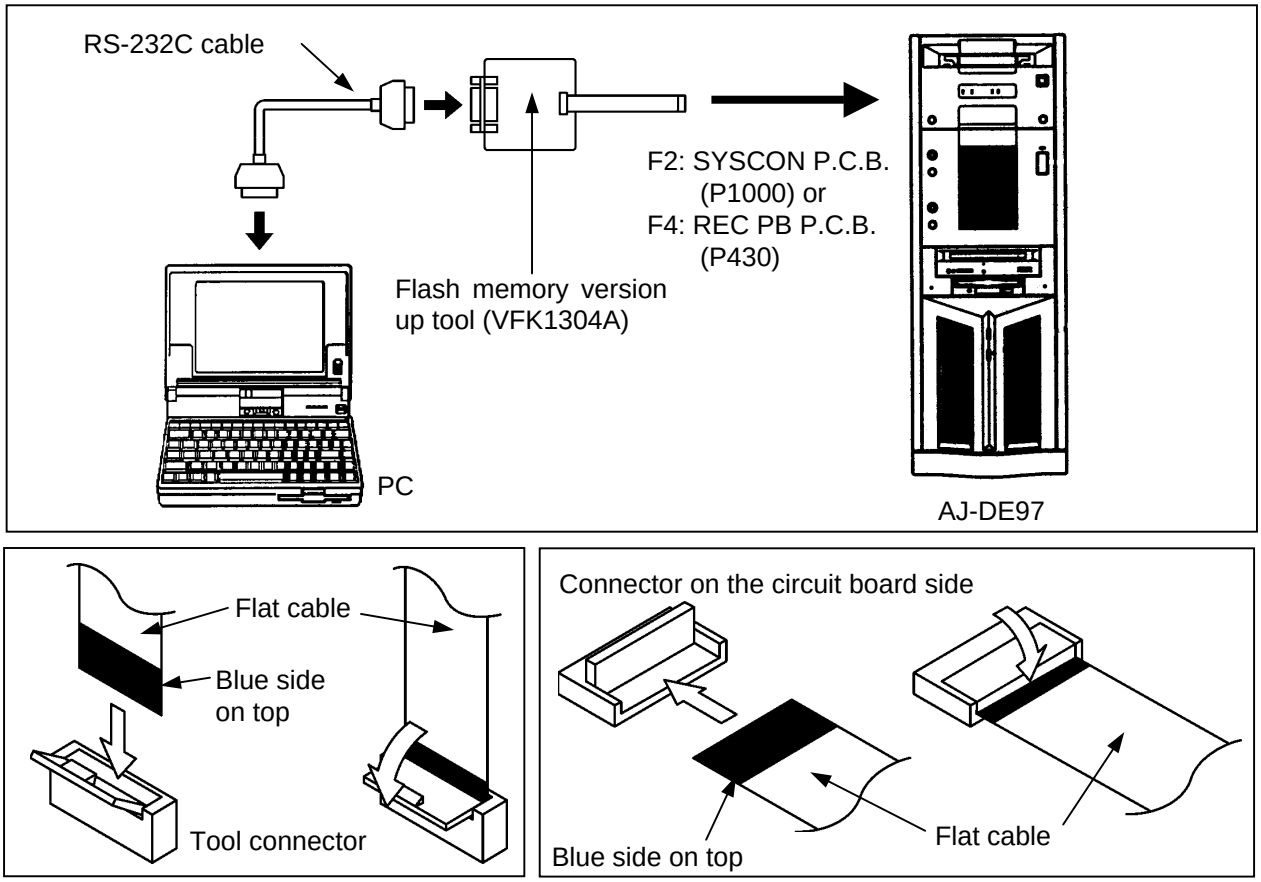

10-2-2. Version Upgrade Procedure

1. Start the personal computer in the condition that "**9-2-1. Version Upgrade Preparations**" described.
2. Turn on the power of the AJ-DE97.
3. Start the flash memory version up software.
   (Double-click the program file "**VSI2312E.EXE**", which had been copied to any directory, or create a shortcut to "**VSI2312E.EXE**" and double-click the shortcut.)
4. When this program is started, the "Setup Panel" open as shown below.

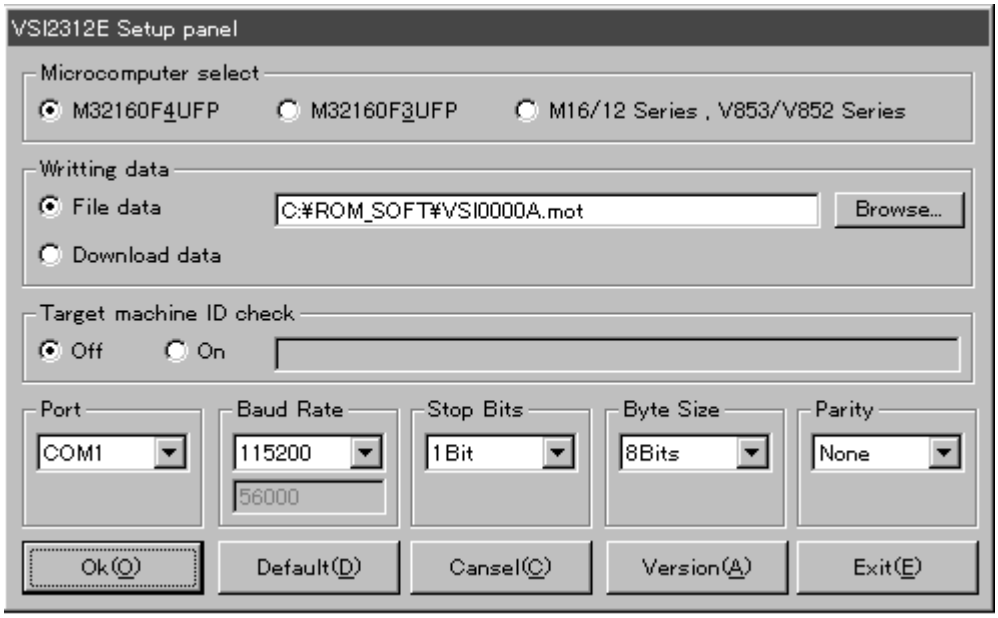

5. Perform the following settings on the “**Setup Panel**”.
   - O Microcomputer select ····· **M32160F4UFP**
   - O Writing data ····· **File data**
     Enter the new software (XXXX.mot) for the version upgrade with the full path. You can also use the “Browse...” button on the “Setup Panel” to select the file name and the location of the new software.
   - O Port ····· Set the port to which the RS-232C cable of the personal computer is connected.
   - O Baud Rate ····· **115200**
   - O Stop Bits ····· **1Bit**
   - O Byte Size ····· **8Bits**
   - O Parity ····· **None**

6. When the settings on the “**Setup Panel**” is completed, click “**Ok(O)**”. The “**Main Panel**” is opened as shown below.

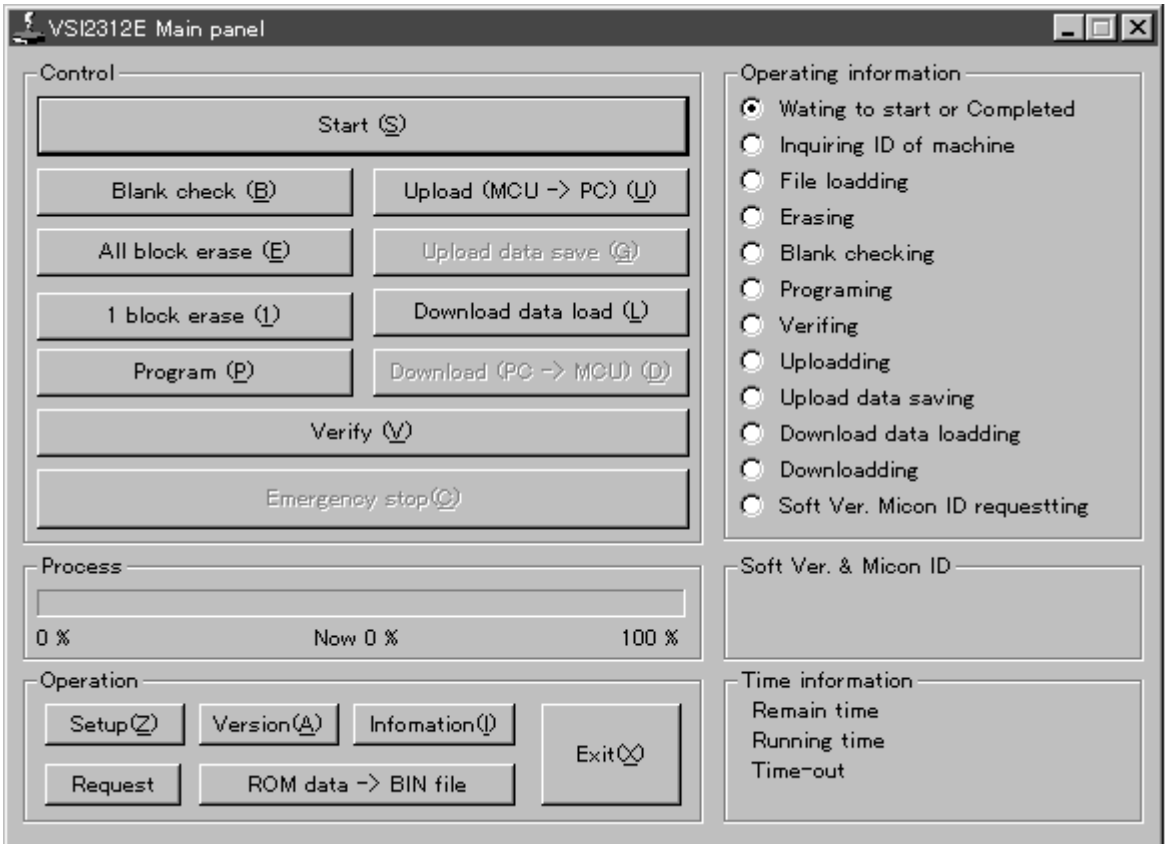

7. Click “**Start (S)** ” on the “**Main Panel**”. (If you want to quit here, click “**Exit**”. If you want to return again to the “**Setup Panel**”, click “**Setup(Z)**”.)
8. After erasing the flash memory, the new software is written to the flash memory. During the processing, the progress status can be confirmed by means of the “**Process**” indicator. If the indicator doesn’t advance for some reason, click “**Emergency stop(C)**” to stop the work, connect again, and confirm the settings.
9. When erasing and writing of the flash memory is completed, the “Process” indicator reaches 100%, and a black dot appears for “**Wating to start or Complete**” of “**Operating information**”. (Next page)

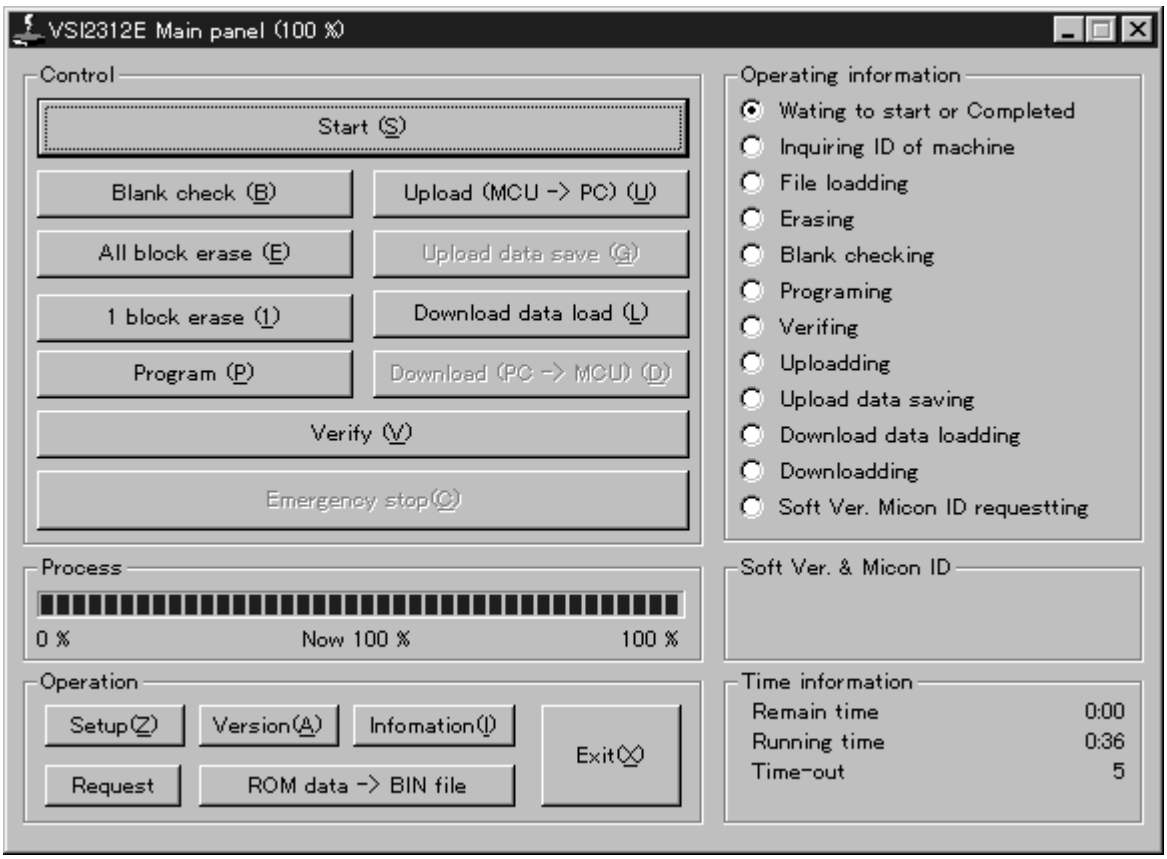

10. When the above status is reached, click “**Exit(X)** ” to end the program.
11. When the version upgrade is completed, turn of the AJ-DE97 power and remove the version up tool.
12. Turn on the AJ-DE97 power again and press the buttons “**PLAY**” and “**STOP**” on the front panel simultaneously to confirm that the version has been upgraded.

10-3. E-PROM (FRONT, I/F) Version Upgrade

The **F2: SYSCON** circuit board was an E-PROM (SYSCON, I/F).
For the software version up, replace the E-PROM with the new version.

F2: SYSCON circuit board

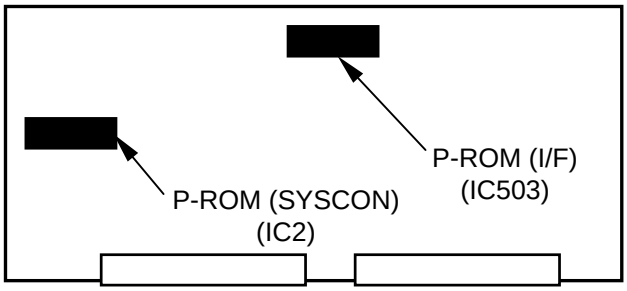

10-4. PLD Version Upgrade Procedure

The AJ-DE97 uses PLDs. At the time of a version upgrade, use the special tool, connect the respective connection connectors, and use the PLD writing software.

Circuit board name	Connector	Number of pins	PLD maker	Use quantity
F1: SERVO	P430	8P	XILINX	1
F2: SYSCON	P1600			2
F4: REC PB	P952	8P	XILINX	1
F5: V OUT	P3006	8P	ALTERA	8
F5sub: 422/844	P3003	7P	XILINX2 [PHILIPS]	3
F6: A-PROC	P371	8P	ALTERA	1

F1: SERVO circuit board

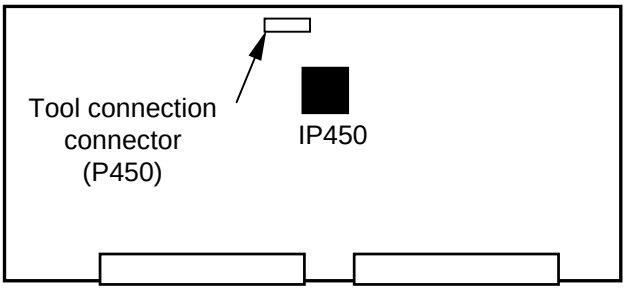

F2: SYSCON circuit board

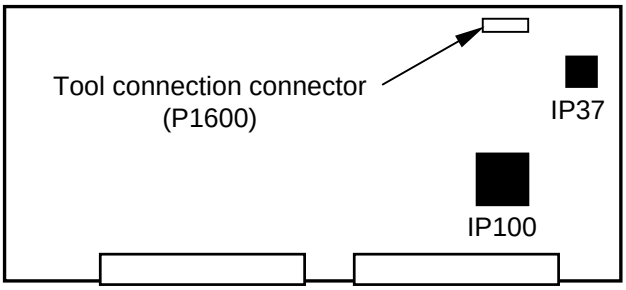

F4: REC PB circuit board

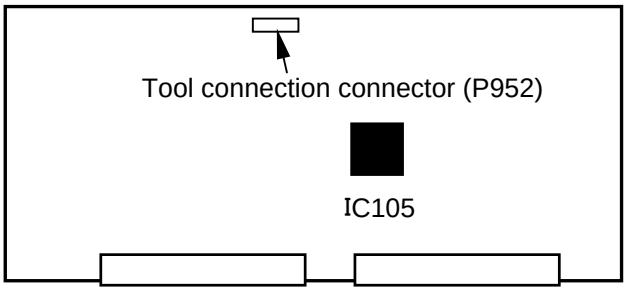

F6: V OUT circuit board

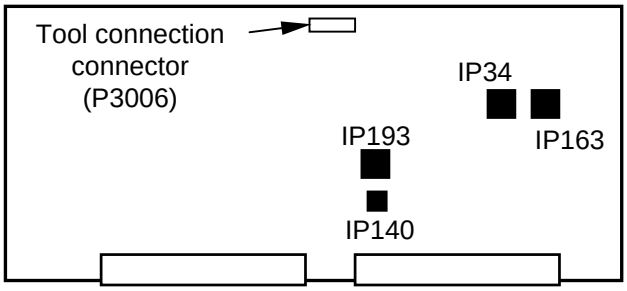

422/844 circuit board

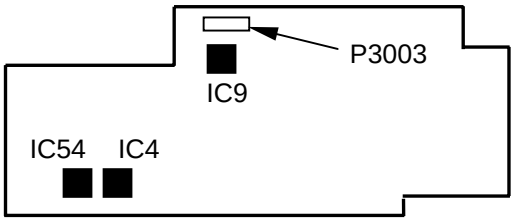

F7: A-PROC circuit board

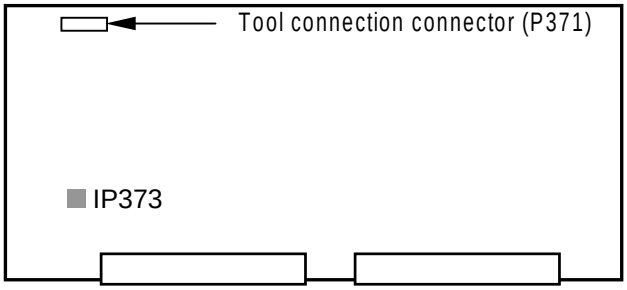

10-4-2. CPLD Version up Method 1 (ALTERA)

A. Preparation

ITEM	REMARK
CPLD WRITER	VFK1590 VFK1590P2 (VFK1590 standard)
D-sub 25pin-25pin Cable	Straight (Male - Female), Length : Within 1meter
Version Upgrade Software	MAX+plus II Software (Please Download from www.altera.com/pub/software/asap2.exe)
Version Upgrade Data	TDF File (Include in “vsi xxxx” file) Notice : For CPLD software version up, other CPLD or SPLD may need to be upgraded together with. Before CPLD version up, confirm the instruction of TDF file.
Personal Computer	WINDOWS 95® or 98®

B. Connection

1. Connect the D-sub Cable between CN201(for ALTERA) connector of the CPLD WRITER(VFK1590) and Personal Computer (Printer port).
2. Connect the CPLD WRITER Cable (VFK1590P2) between connector on objective PCB and P2 connector of CPLD WRITER. (Refer to 10-3-1.Chart of CPLD Writer and Figure 10-3-2.)
3. Turn on AJ-DE97 and Personal Computer (Windows mode).

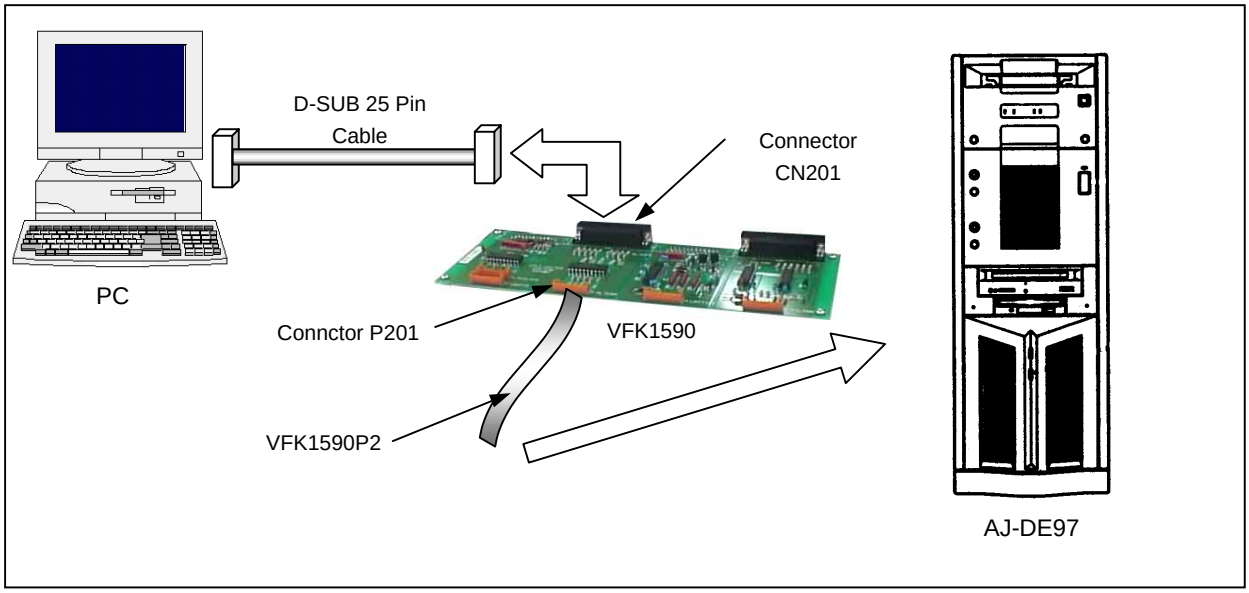

Figure 10-3-2 Connction for CPLD version up

C. Boot up the Ver. Up Software and Ver. up Procedure

1. Boot up the **"MAX+plus II 9.6 programmer only"** Software.
2. On main window, select tab **"MAX+plus II"** and then **"Programmer"**.
3. On main window（Programmer window is displayed）, select tab **"Option"** and then **"Hardware Setup"**.
4. On **Hardware Setup** dialog, set the "**Hardware Type"** to **"ByteBlaster (MV)"**.

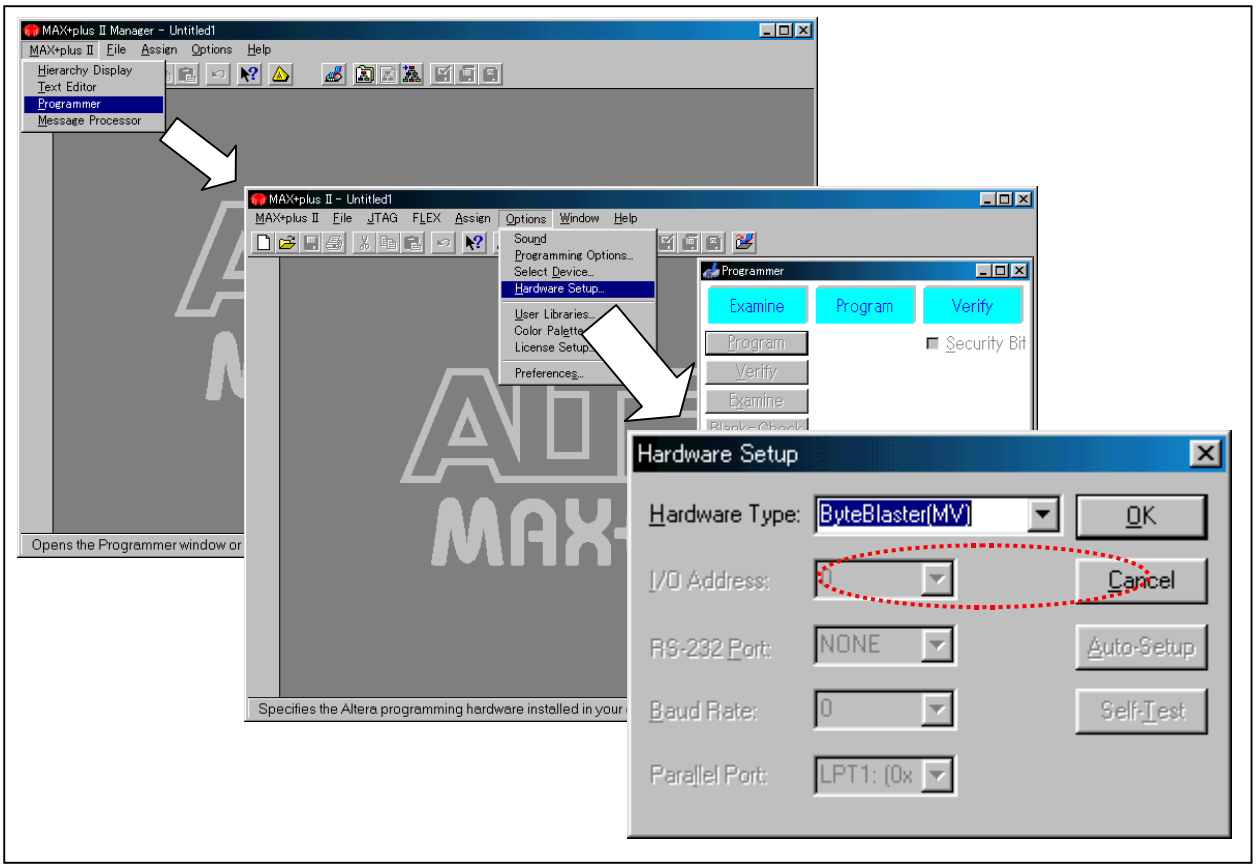

5. On main window, select tab **"File"**, **"Project"** and then **"Name"**.
6. On dialog of **Project Name**, select the **"tdf format file"** or **"pof format file"** and then perss **"OK"** button.

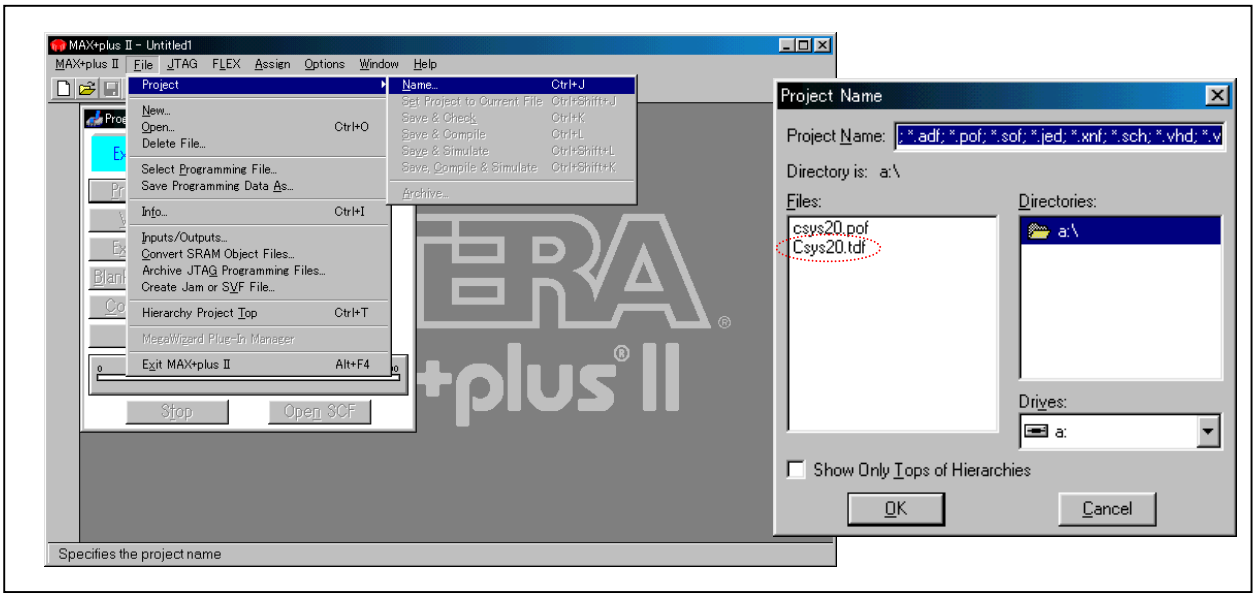

7. Click the **"Program"** button on Programmer dialog.
8. When Progress Bar reaches at point of **100**, the message "Programming Complete" appears, then PLD version upgrade is completed. Click "OK" button on the **Programming complete** message Dialog.

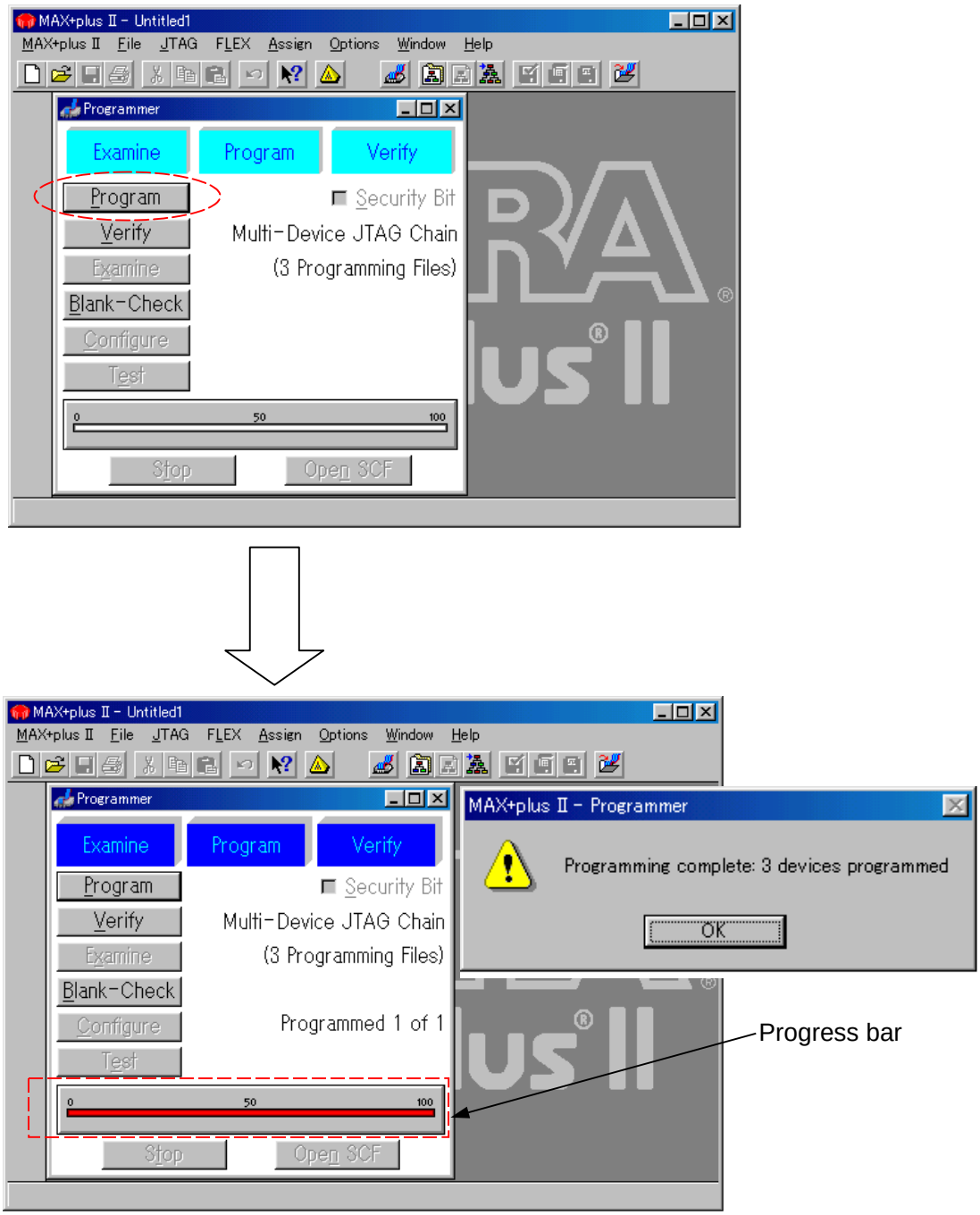

* MAX+PLUS are registered tradmarks of Altera Corporation.
* Windows95 and Windows98 are registered tradmarks of Microsoft Corporation.

10-4-3. CPLD Version up Method 2 (XILINX)

A. Preparation

ITEM	REMARK
CPLD WRITER	VFK1590 VFK1590P4 (VFK1590 standard)
25pin-25pin Cable	Straight (Male - Female), Length : Within 1meter
Version Upgrade Software	JTAG Programmer Software (Please Download from www.xilinx.com)
Version Upgrade Data	cdf File（Include in VSI**** file)
Personal Computer	WINDOWS 95® or 98®

B. Connection

1. Connect the D-sub Cable between CN401(for XILINX) connector of the CPLD WRITER(VFK1590) and Personal Computer (Printer port).
2. Connect the CPLD WRITER Cable (VFK1590P4) between connector on objective PCB and P4 connector of CPLD WRITER. (Refer to 10-3-1.Chart of CPLD Writer and Figure 10-3-2.)
3. Turn on AJ-DE97 and Personal Computer (Windows mode).

C. Boot up the Ver. Up Software and Ver. up Procedure

1. After download the program, **"Xilinx CPLD Webpack"** folder is created on windows. Click the start button of windows program **"Xilinx CPLD Webpack"**, then Device Program is boot up and following screen apperaes.

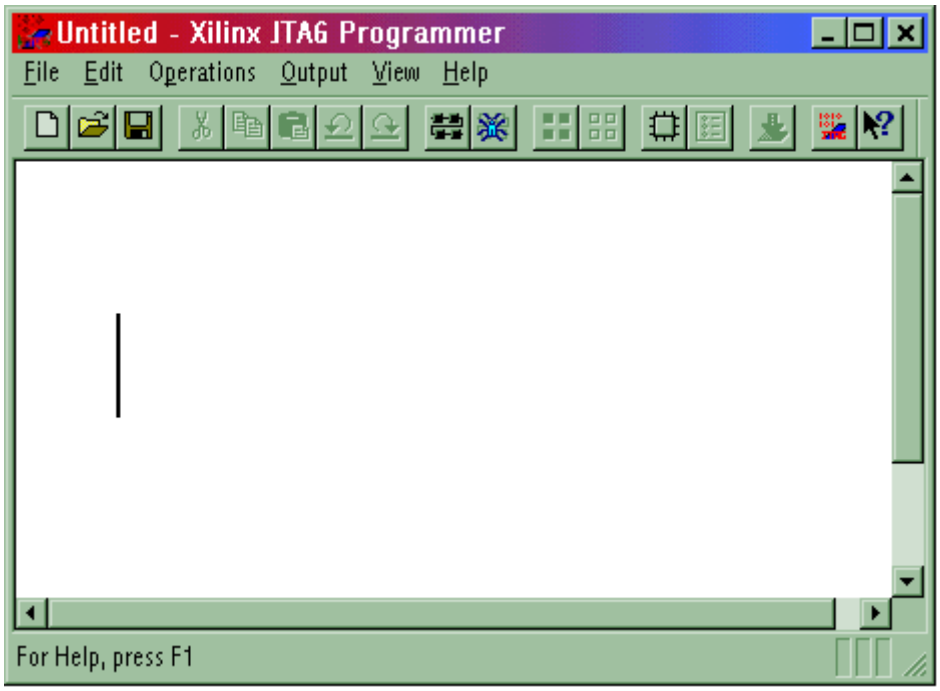

2. Click **"OUTPUT"** on the menu bar and select **"Parralle"** for **"Cable Communication Setup"** （default port is **"lpt1"**）.

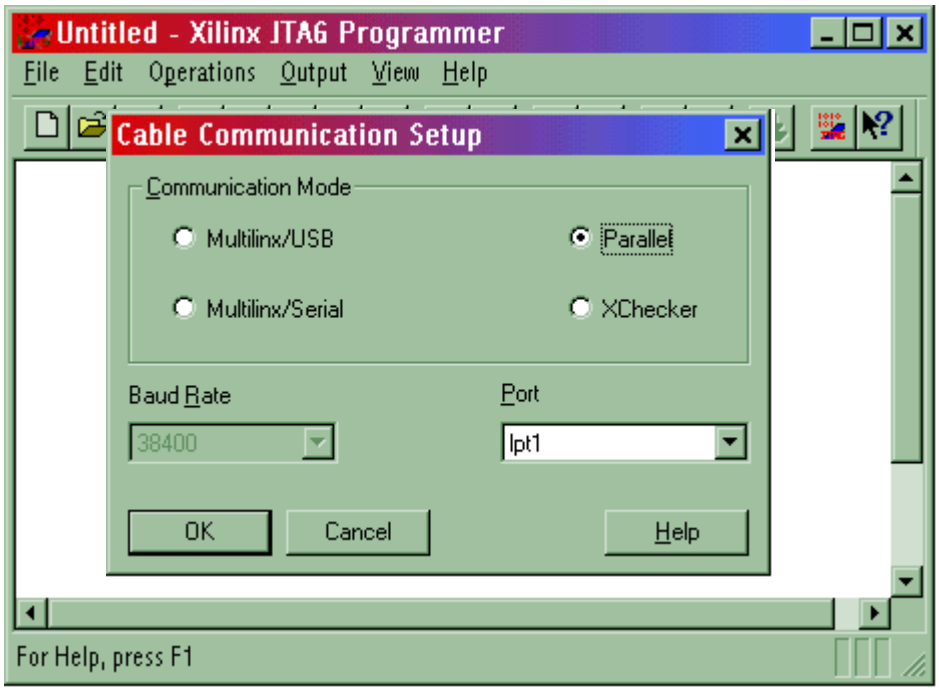

3. If connection is correct, following message appears.

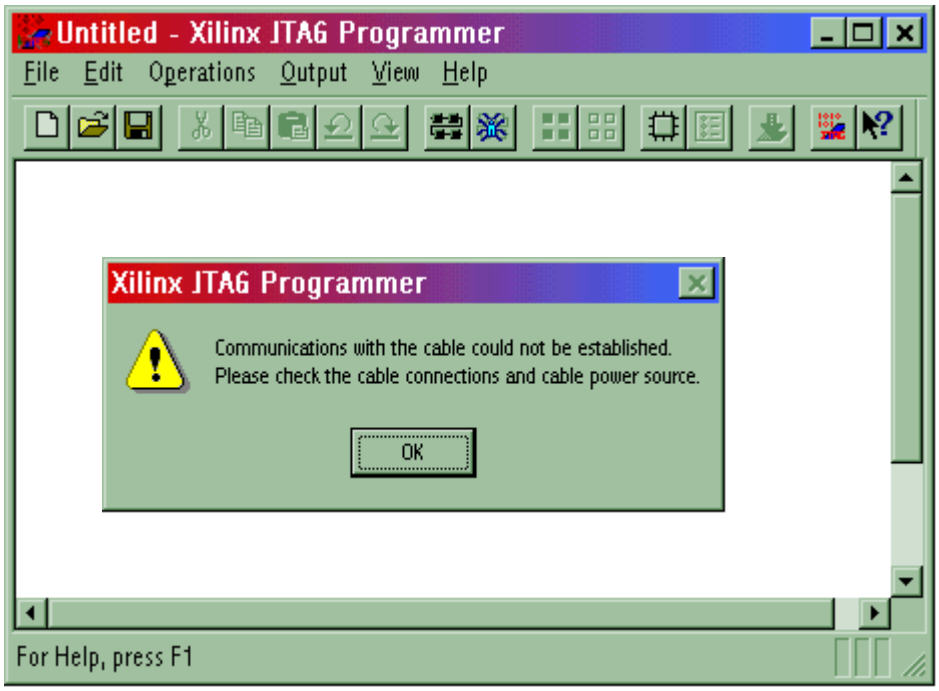

4. Click **"OK"** button.
5. Insert the floppy disk for version up data into A drive.
6. Open the target file. This file called Disk file, because one file can write serveral CPLDs like a chan.

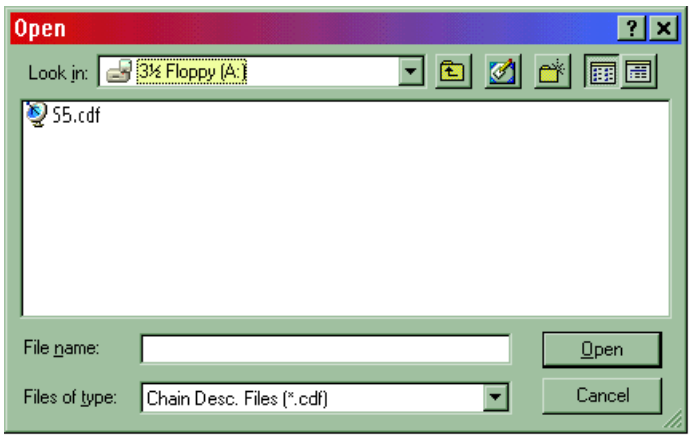

7. Click open button, then following screen appears.

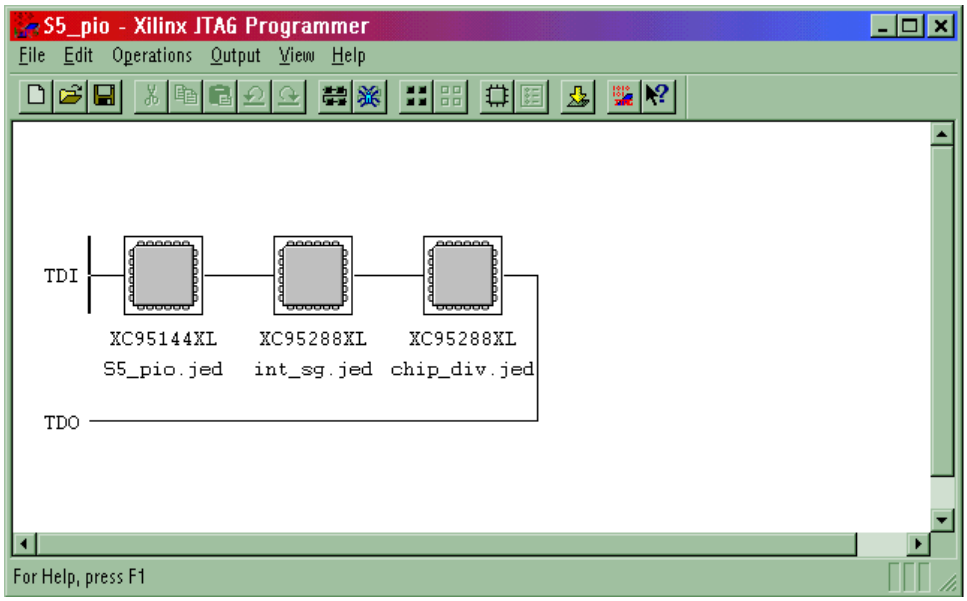

8. Then click **"Operations"** on menu bar and select **"Chain Operation"**. Then following screen appears.
9. Select the divice from the **"Device Type"** column on the Chain Operation womdow.
   Click the **"Selected Device Operation"** and select **"Program"**.
   Perform this procedure to all devices.

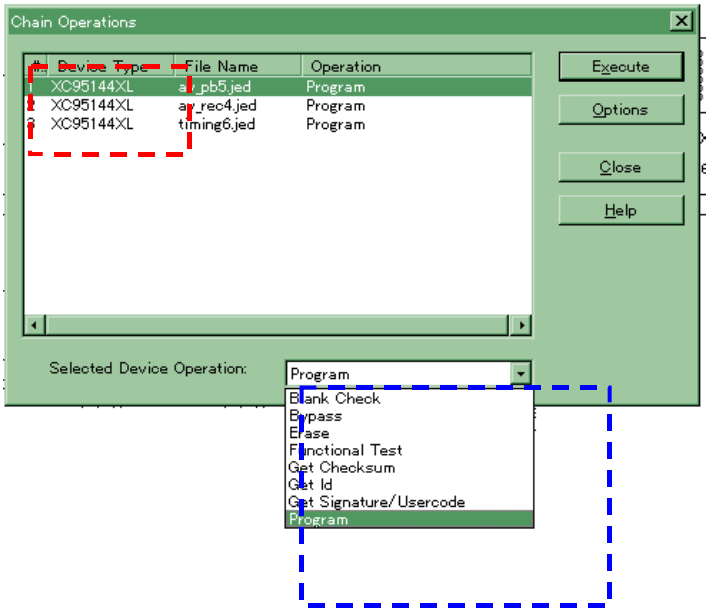

10. Click **"Execute"** button.
11. When the following screen with the message of **"All operation were completed successfully."** appears, Data writing is completd.

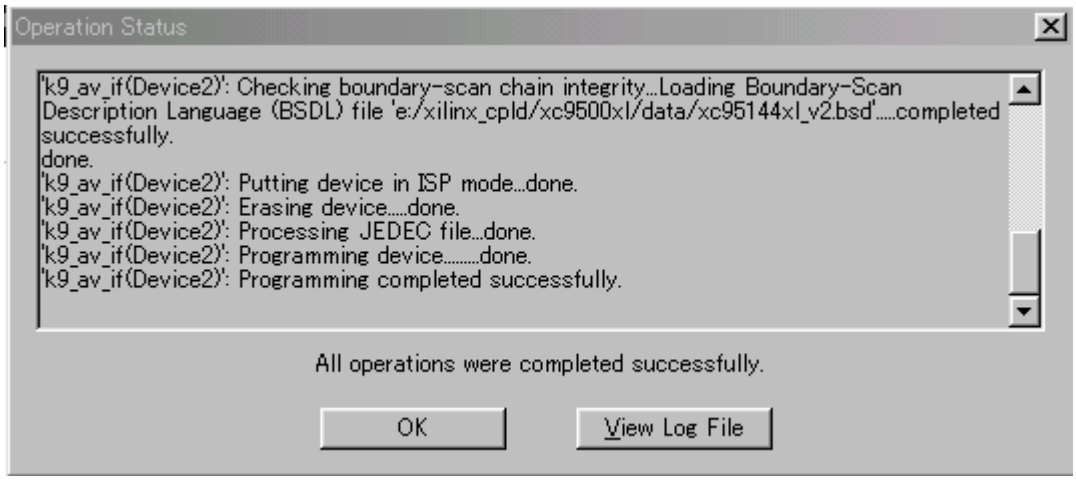

10-4-4. CPLD Version up Method 3 (XILINX2 [PHILIPS])

A. Preparation

ITEM	REMARK
CPLD WRITER	VFK1590 VFK1590P5 (VFK1590 standard)
D-sub 25pin-25pin Cable	Straight (Male - Female), Length : Within 1meter
Version Upgrade Software	XPLA PC-ISP3 Programmer (Please Download from www.xilinx.com)
Version Upgrade Data	Jed File（Included in VSI**** file) Notice : For CPLD software version up, other CPLD or SPLD may need to be upgraded together with. Before CPLD version up, confirm the instruction of TDF file.
Personal Computer	WINDOWS 95® or 98®

B. Connection

1. Connect the D-sub Cable between CN501(for PHILIPS) connector of the CPLD WRITER(VFK1590) and Personal Computer (Printer port).
2. Connect the CPLD WRITER Cable (VFK1590P5) between connector on objective PCB and P5 connector of CPLD WRITER. (Refer to 10-3-1.Chart of CPLD Writer and Figure 10-3-2.)
3. Turn on AJ-DE97 and Personal Computer (Windows mode).

C. Boot up the Ver. Up Software and Ver. up Procedure

1. Click the start button of windows program **"Xilinx CPLD Webpack > XPLA Device Programming"**, then Device Program is booted up.
2. Following screen apperaees.

JTAG Chain Window

・ Confirm that the illustration of CPLD is displayed on "JTAG Chain route Window".
・ When a pitcher of CPLD isn't displayed, check the connection of the P.C.Board, the CPLD WRITER and the personal computer.

Message Window

If the following message is displayed, it means that connection and communication was successfully done.
" Checking ISP download cable/Board connection. "
" ISHP Hyper Cable/Board found "
" There is 1 JTAG device in the system."

If the following message is displayed, there may be fault in the connection between the P.C.Board and the CPLD WRITER or between the CPLD WRITER and the personal computer.
" ***Warring:can not find Hypercable/Board or loose connect! "
" ***Warring:can not find Hypercable/Board or loose connect! "
" ***Warring:can not find Xilinx Parallel Cable/Board or loose connect! "
" ***Warring:can not find Altera ByteBlaster Cable/Board or loose connect!"
" ***Warring:Set Xilinx Parallel cable as default! "

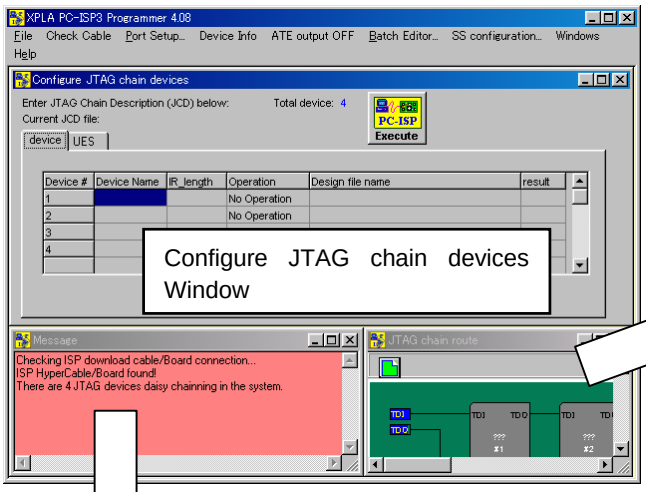

Configure JTAG chain devices Window

JTAG Chain route Window

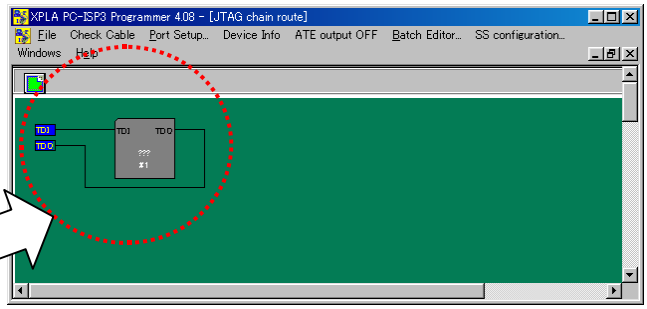

・Confirm that the illustration of CPLD is displayed on “JTAG Chain route Window”.
・When a pictcher of CPLD isn’t displayed, check the connection.

Message Window

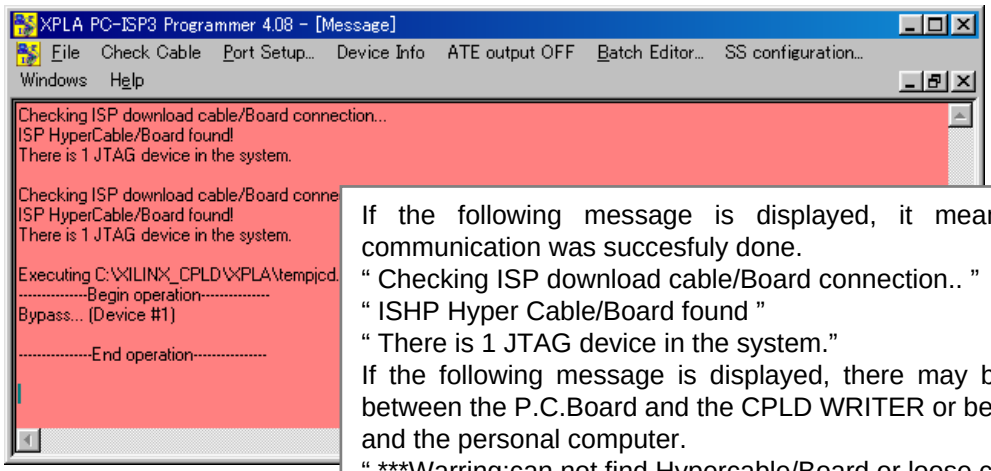

If the following message is displayed, it means that connection and communication was succesfuly done.
“ Checking ISP download cable/Board connection.. ”
“ ISHP Hyper Cable/Board found ”
“ There is 1 JTAG device in the system.”
If the following message is displayed, there may be fault in the connection between the P.C.Board and the CPLD WRITER or between the CPLD WRITER and the personal computer.
“ ***Warring:can not find Hypercable/Board or loose connect! ”
“ ***Warring:can not find Xilinx Parallel Cable/Board or loose connect! ”
“ ***Warring:can not find Altera ByteBlaster Cable/Board or loose connect!”
“ ***Warring:Set Xilinx Parallel cable as default! ”

3. Set each items as follws on “Configure JTAG chain device Window”.

① Device Name : Model number of CPLD
② Operation : Select the operation
③ Design file name : Select the program to write in CPLD

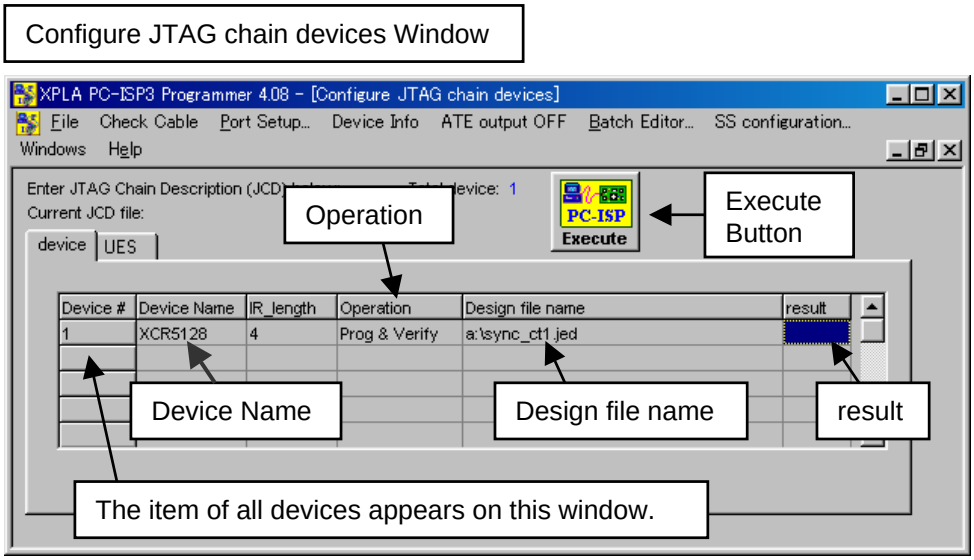

① Device Name : Selection of the CPLD Device Name.

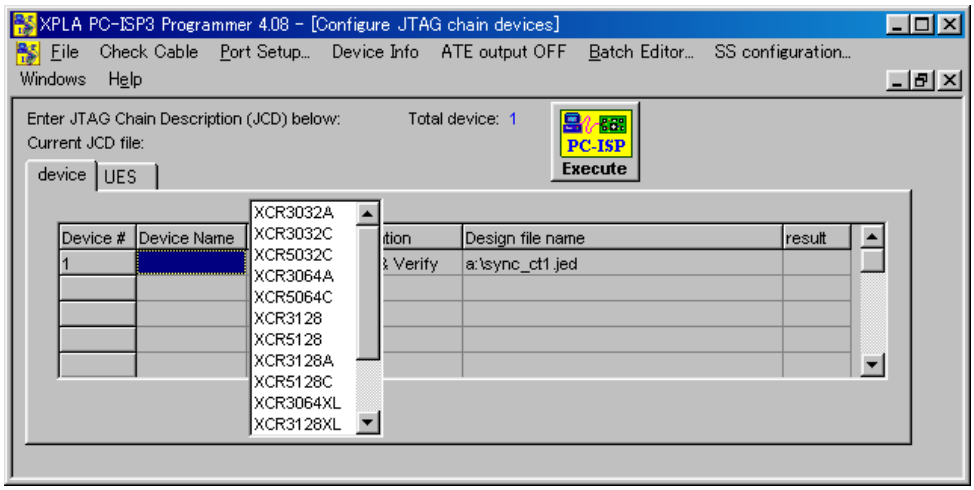

② Operation

Selection of the “CPLD Programmer” operation.

Click ”Operation” frame of the objective CPLD and then select ”Prog & Verify” in the menu.

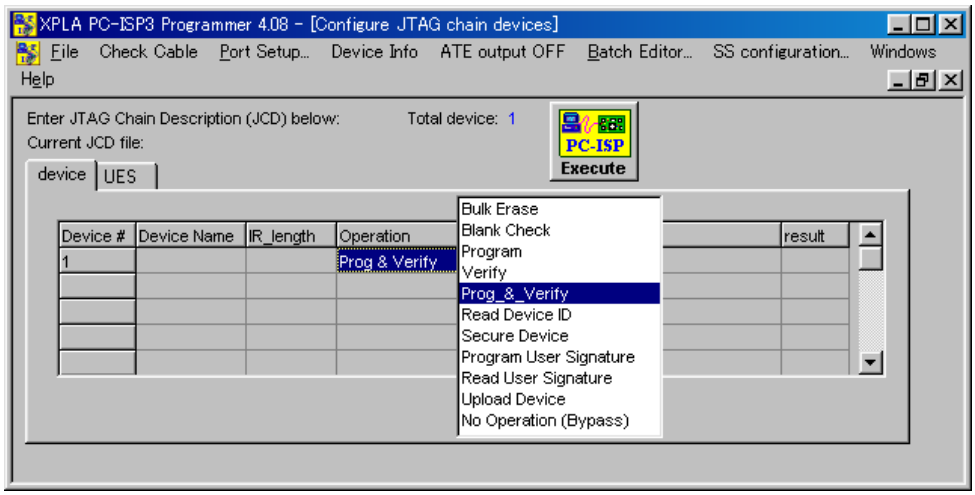

③ Design file name:

Selection the program to write in CPLD

Click ”Design file name” frame of the objective CPLD and then select the version up file.

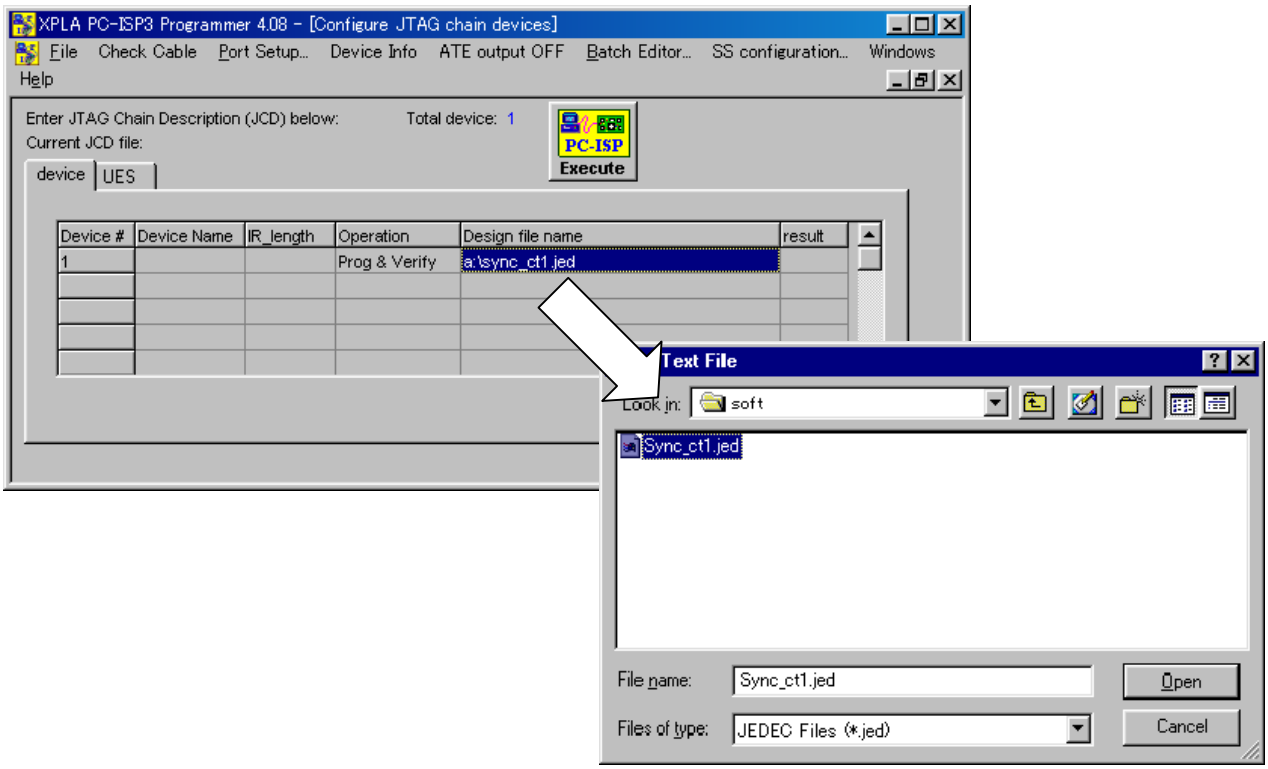

4. Click “Execute” Button.
When “pass” is displayed in the result frame and following message is displayed on Message Window, writing into CPLD is completed.

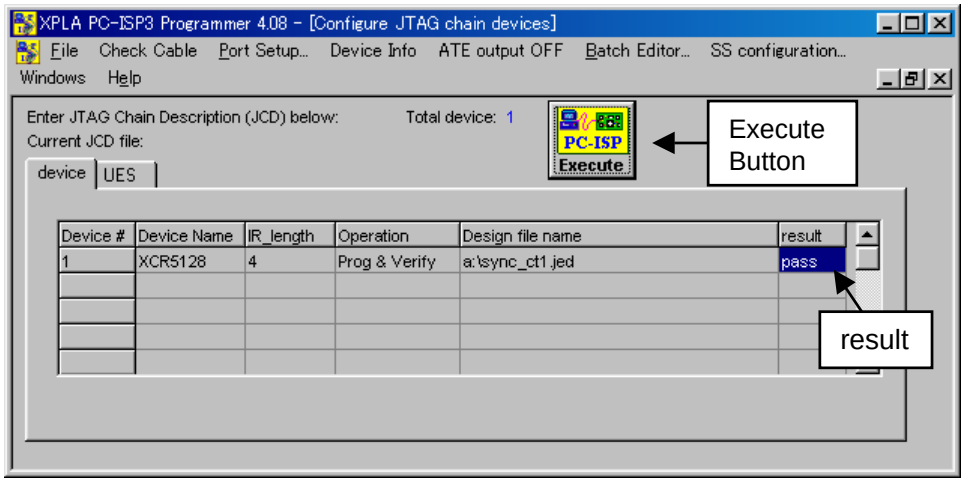

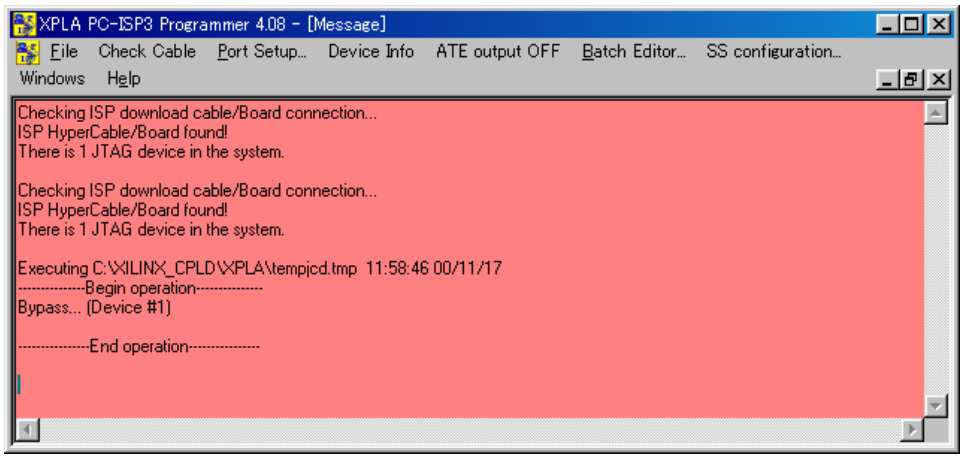

11. Error Rate Display and Confirmation Method

1. Connect the Service Front Panel Unit to AJ-DE97.
   Refer to **" 7, *Connection of the Service Front Panel Unit"*** in ***"Section 2. Service Information"***.
2. Set the DIP switch **SW4-1** on the rear of the front panel to "**ON**".
3. Set **CF SW** under the front panel to the position "**4F/8F**".
4. Set **TC REGEN/PRESET** under the front panel to the position "**REGEN**".
5. Select **B00: RF ADJUST** in the service menu.
6. On the next screen, select **C00: DVCPRO 18000 ADJUST** or **D00: DVCPRO 9000 ADJUST** in the case of DVCPRO.
7. On the next screen, use the ATF HEAD setting to select the head for which the error rate is to be displayed from **C43** or **D43**. (Refer to the following table.)
8. The error rate for the selected head will be displayed in the signal level display window on the front panel of the unit.

A. VIDEO Error Rate

(1) Set the TC IN/EXT SW of the Service Front Panel Unit to **INT**.

SERVICE MENU	ATF HEAD	1	2	3	4
C43 or D43	PB	PBL1 VIDEO	PBL2 VIDEO	PBR1 VIDEO	PBR2 VIDEO
	PR	RPL1 VIDEO	RPL2 VIDEO	RPR1 VIDEO	RPR2 VIDEO

B. AUDIO Erroe Rate

(1) Set the TC IN/EXT SW of the Service Front Panel Unit to **EXT**.

SERVICE MENU	ATF HEAD	1	2	3	4
C43 or D43	PB	PBL1 AUDIO	PBL2 AUDIO	PBR1 AUDIO	PBR2 AUDIO
	PR	RPL1 AUDIO	RPL2 AUDIO	RPR1 AUDIO	RPR2 AUDIO

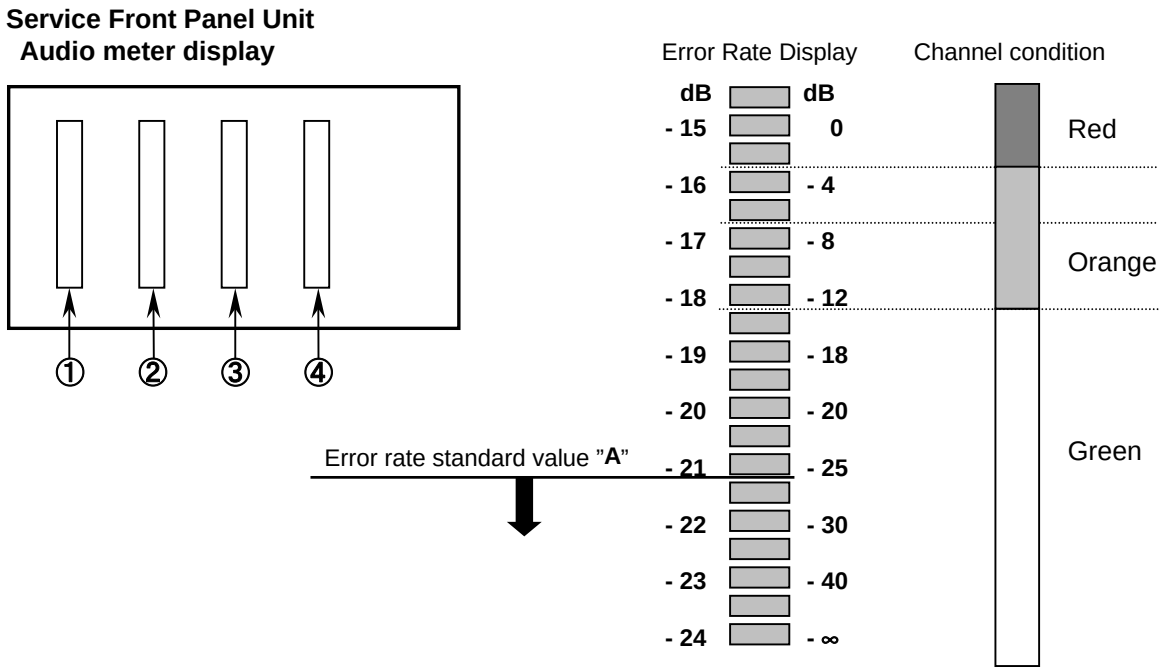

12. Internal Switch Setting Method

The switche setting on each circuit board are shown below.
The switches “Factory use only” must be set to the “factory setting”.

BOARD	Ref. No.	SW	FACTORY SETTING	FEATURE
F2:SYSCON	SW900	1-2	OFF	Factory use only
		3	–	Not Used
		4	ON(FIXED)	Factory use only
		5	–	Not Used
		6-7	OFF(FIXED)	Factory use only
		8	–	Not Used
	SW1000	1	OFF(FIXED)	Factory use only
		2-3	–	Not Used
		4	OFF(FIXED)	Factory use only
	SW1001	1-4	ON(FIXED)	Factory use only
	SW1602	1	ON(FIXED)	Factory use only
		2	OFF(FIXED)	Factory use only
		3-4	–	Not Used
F4:REC PB	SW100	1	OFF(FIXED)	Factory use only
		2	ON(FIXED)	Factory use only
	SW430	1-4	OFF(FIXED)	Factory use only
	SW500	1	OFF(FIXED)	Factory use only
		2	OFF(FIXED)	Factory use only
	SW600	1-2	OFF(FIXED)	Factory use only
		3-4	OFF(FIXED)	Factory use only
	SW950	1	–	Not Used
		2	ON(FIXED)	Factory use only
F6 SUB: 422/844 DA	SW1	1-8	–	Not Used
H1:EQ MAIN	SW1	1	OFF	NORMAL DATA REC(for compatibility adjustment) (refer to Mechanical Adjustment)
		2-3	OFF(FIXED)	Factory use only
		4	–	Not Used
	SW2	1-4	ON(FIXED)	Factory use only
		5-6	OFF(FIXED)	Factory use only
	SW3	1-3	OFF(FIXED)	Factory use only
		4	ON(FIXED)	Factory use only
		5-7	OFF(FIXED)	Factory use only
		8	ON(FIXED)	Factory use only
H2: EQ1 H3: EQ2	SW300	1	ON	TEST MODE (for EQ, Envelope Lvel Adjustment) (refer to Electrical Adjustment)
		2-3	ON(FIXED)	Factory use only
		4	ON	TEST MODE (for Envelope Lvel Adjustment) (refer to Electrical Adjustment)
		5-6	OFF(FIXED)	Factory use only
	SW600	1	ON	TEST MODE (for EQ, Envelope Lvel Adjustment) (refer to Electrical Adjustment)
		2-3	ON(FIXED)	Factory use only
		4	ON	TEST MODE (for EQ, Envelope Lvel Adjustment) (refer to Electrical Adjustment)
		5-6	OFF(FIXED)	Factory use only
H7: A AD	SW4141		600	CH1 Audio input impedance setting(600Ω / HIGH)
	SW4101		600	CH2 Audio input impedance setting(600 Ω / HIGH)
	SW4041		600	CH3 Audio input impedance setting(600 Ω / HIGH)
	SW4001		600	CH4 Audio input impedance setting(600 Ω / HIGH)

F2: SYSCON circuit board

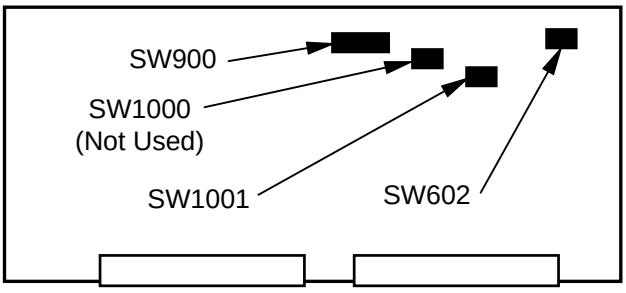

F4: REC/PB circuit board

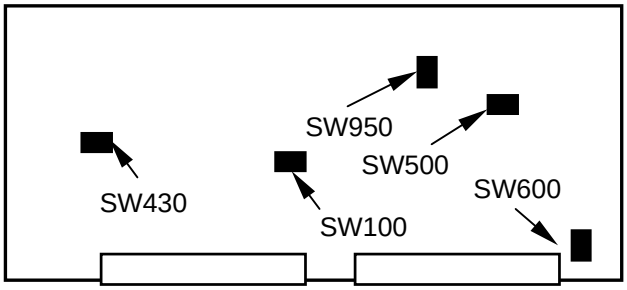

422/844 circuit board

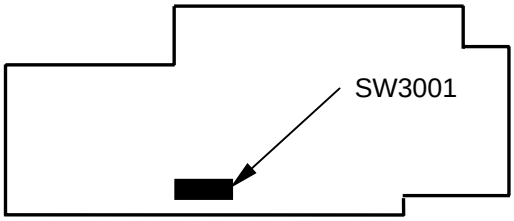

H1: EQ MAIN circuit board

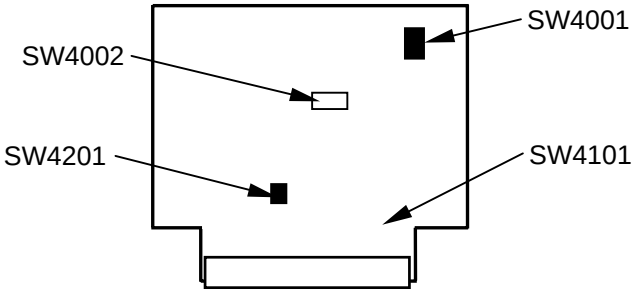

H2,3: EQ 1, 2 circuit board

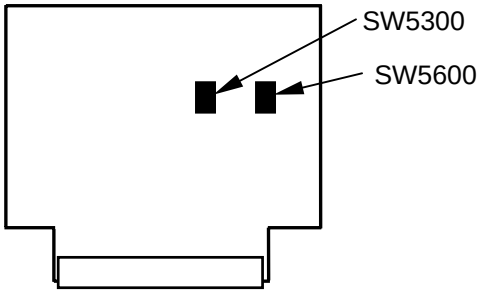

H7: A AD circuit board

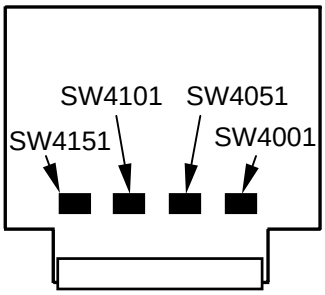

13. Internal LED Indication

Circuit board name	Ref. No.	Function
F1: SERVO	D500	Capstan servo lock: Light with lock/not light with unlock
	D501	Cylinder servo lock: Light with lock/not light with unlock
	D502	For confirmation of SERVO microcomputer operation. (Blinking in a cycle of about 1 sec)
F2: SYSCON	D409	For factory confirmation
	D410	For factory confirmation
	D411	For factory confirmation
	D412	For confirmation of SYSCON microcomputer operation. (Blinking in a cycle of about 1 sec)
	D1009	For confirmation of IF microcomputer operation. (Blinking in a cycle of about 1 sec)
	D1010	For confirmation of frame pulse interrupt operation (communication between microcomputers) (Blinking in a cycle of about 1 sec)
	D1011	For SDI input detection (Light with SDI input/not light with no input)
F4: REC PB	D431	For confirmation of DV microcomputer operation. (Blinking in a cycle of about 1 sec)
	D430	For factory confirmation
	D603	SDI input lock (internal I/F): Light with lock/not light with unlock
	D607	SDTI input lock (internal I/F): Light with lock/not light with unlock
	D604	For factory confirmation
	D600	For factory confirmation
	D950	For factory confirmation
	D500	LOCK_DET: SDI/SDTI output lock (internal I/F) : Light with lock/not light with unlock

F1: SERVO circuit board

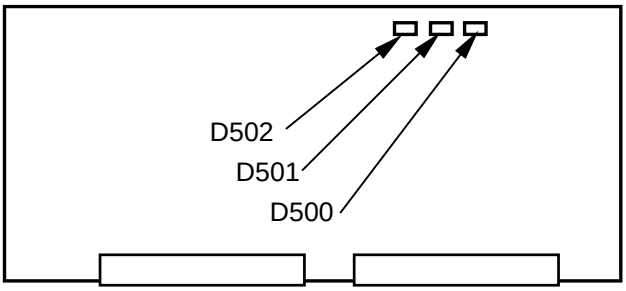

F2: SYSCON circuit board

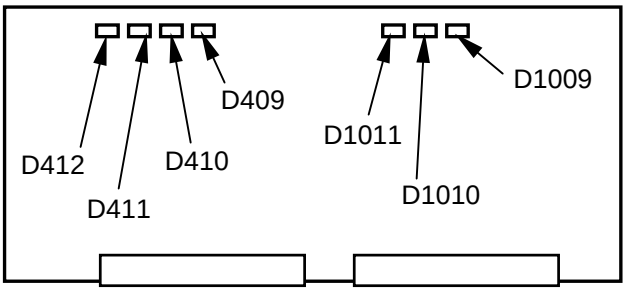

F5: REC/PB circuit board

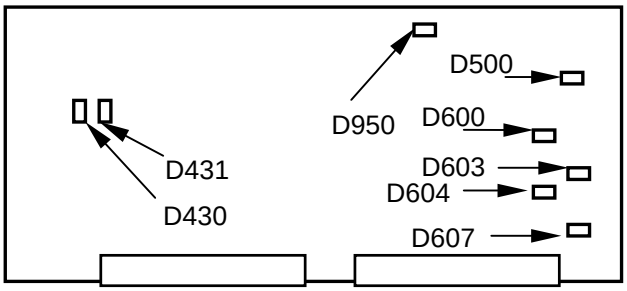

14. Setting of PC section

● **CPU MOTHER BOARD**

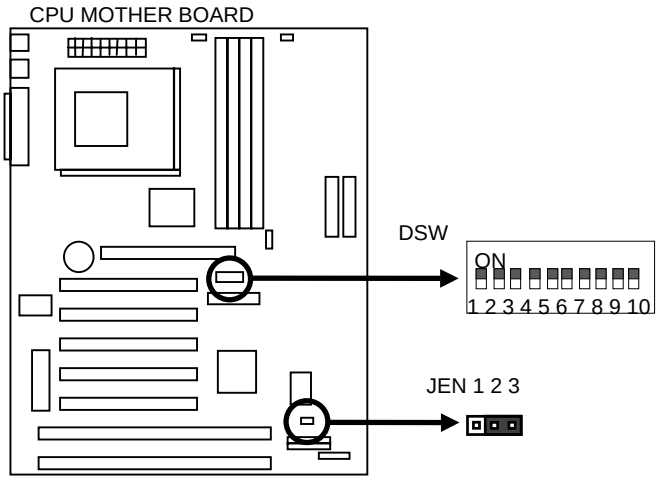

● **REMOTE I/O BOARD**

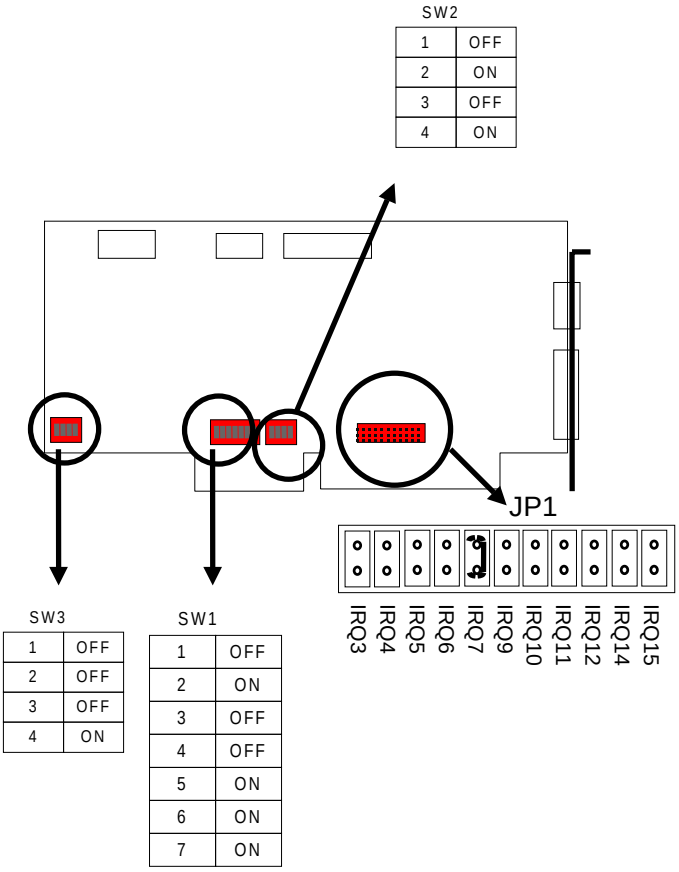

- **FD Drive**

Caution for Installation

Master setting jumper pins ware installed on front of the Disk as shown below. When install the new Hard Disk, reinstall the master setting jumper pins as specify from old Hard Disk to new one.

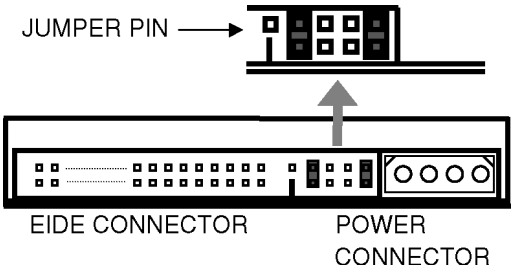

- **CD-ROM DRIVE**

Caution for Installation

Slave setting jumper pins ware installed on front of The Disk as shown below. When install the new CD-ROM Drive, reinstall the slave setting jumper pins as specify from old CD-ROM Drive to new one.

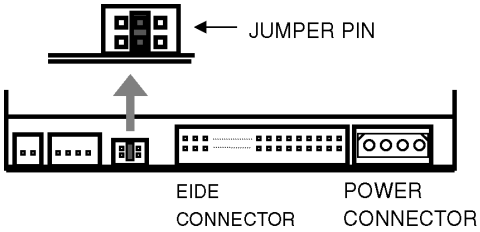

- **AV Hard Disk Drive**

AV Hard Disk Setting

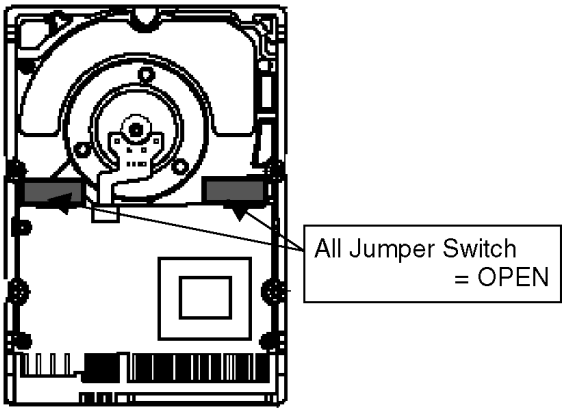

15. Service Menu

15-1. Service Menu Operation Method

1. Confirm that the "**REMOTE/LOCAL**" switch on the front panel is set to **LOCAL**.
2. Set the DIP **switch 1-1** at the rear of the front panel to **ON**.
3. Press the "**MENU**" button on the front panel to display the following service menu (main item selection mode) on the monitor.
4. Turn the **SEARCH** dial to move the cursor "*" for selection of one of the main items from A00 to H00.
5. When a main item **(A00, F00, G00, H00)** other than RF adjustment **(B00)** has been selected and the "**SET**" button on the front panel is pressed, the item setting window for the selected main item will be opened.
6. RF adjustment **(B00)** has a sub-window composition. When the "**RF ADJUST sub-window 1**" or the "**RF ADJUST sub-window 2**" is selected and the "**SET**" button is pressed, the selected item setting window (or the DEFAULT operation window) will be opened.
7. In either case, return to the previous window is possible by using the "**MENU**" button.
8. In the item setting window (or the DEFAULT operation window), the setting contents can be changed by moving the cursor "*****" with the **SEARCH** dial and then turning the **SEARCH** dial while the **SEARCH** button is pressed. (However, refer to the contents of the service manual, as the setting operation may differ according to the item.)

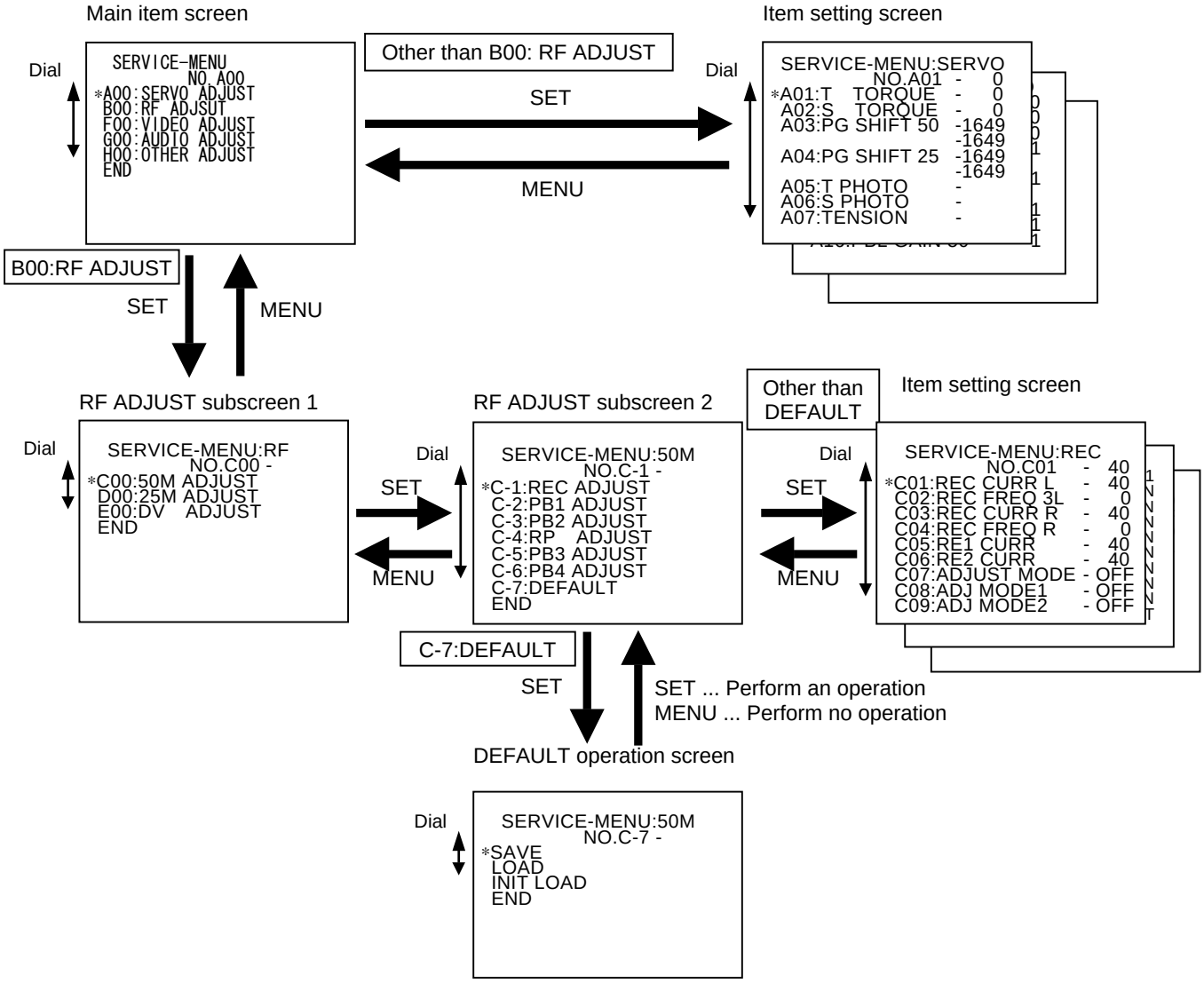

<<LOAD/SAVE of the factory default values and INIT operation (only RF adjustment)>>

In RF adjustment it is possible to save the set values to an area different from the backup area for the present set values. It is possible to load these saved set values to the present set values. It is also possible to load the initial values before adjustment. This operation is effective only after loading completion.

○ **Operation procedure**

1. Move the cursor **"∗" to the C-7: DEFAULT position.**
2. Press the "**SET**" button on the front panel.
3. Turn the **SEARCH** dial and move the cursor "∗" to the item for the desired operation.
   SAVE: The present set value will be saved as the factory default adjustment value.
   LOAD: The saved factory default adjustment value will be loaded as the present set value.
   (When no SAVE operation has been performed, the initial value will be loaded.)
   INIT LOAD: The initial value will be loaded as the present set value.
4. When the "**SET**" button is pressed, the selected operation will be performed and the display will return to the item setting screen.
   When the "**MENU**" button is pressed, no operation will be performed and the display will return to the item setting screen.

15-2. Service Menu Contents

A00: SERVO ADJUST

Item		Set value		Setting contents and outline function explanation	BACK -UP	Remarks
No.	SUPER DISP.	No.	SUPER DISP.			
A01	T TORQUE	−128 | 0 | 127	−128 | 0 | 127	Compensation of the T-reel driver offset value This shall be done in EJECT condition. 【Operation:】 1. The following operations will start when the SEARCH button is pressed. 1) T-brake OFF 2) Cylinder rotation (9000 rpm) 3) Loading to the loading completion position 2. Set the value with the search dial. 3. Release the SEARCH button when setting is completed. 1) Unloading to the unloading completion position 2) Cylinder stop 3) T-brake ON	○	
A02	S TORQUE	−128 | 0 | 127	−128 | 0 | 127	Compensation of the S-reel driver offset value This shall be done in EJECT condition. 【Operation:】 1. The following operations will start when the SEARCH button is pressed. 1) S-brake OFF 2) Cylinder rotation (9000 rpm) 3) Loading to the loading completion position 2. Set the value with the search dial. 3. Release the SEARCH button when setting is completed. 1) Unloading to the unloading completion position 2) Cylinder stop 3) S-brake ON	○	
A03	PG SHIFT 18K	RISE 0 | 1649 | 4095 FALL 0 | 1649 | 4095	RISE 0 | 1649 | 4095 FALL 0 | 1649 | 4095	Standard tape is used for PG mono-multi automatic adjustment. (For 18000 rpm, forced switching to DVCPRO 25 Mbps 18000 rpm mode.) 【Operation:】 1. Switch to PLAY mode. 2. Keep pressing the SEARCH button. The set value indication will go out and automatic adjustment will start. 3. When the set value is displayed, adjustment is completed. Release the SEARCH button.	○	
A04	PG SHIFT 9K	RISE 0 | 1649 | 4095 FALL 0 | 1649 | 4095	RISE 0 | 1649 | 4095 FALL 0 | 1649 | 4095	Standard tape is used for PG mono-multi automatic adjustment. (For 9000 rpm, forced switching to DVCPRO 25 Mbps 9000 rpm mode.) 【Operation:】 1. Switch to PLAY mode. 2. Keep pressing the SEARCH button. The set value indication will go out and automatic adjustment will start. 3. When the set value is displayed, adjustment is completed. Release the SEARCH button.	○	
A05	T PHOTO		Voltage value 0.0V | 5.0V	Indication of the detection voltage of the photosensor for start and end detection on the T-side This is used for adjustment of the sensitivity of the photosensor. 【Operation】 1. Switch to EJECT mode. 2. Select the item. 3. The voltage value will be displayed. 4. Insert the cassette for sensitivity adjustment. Stop will be performed at the cassette DOWN position. 5. Adjust the sensitivity with the VR on the MECHA_IF. 6. The cassette will be ejected when the cursor is moved to an item other than A05: T PHOTO or A06: S PHOTO.	×	

Item		Set value		Setting contents and outline function explanation	BACK -UP	Remarks
No.	SUPER DISP.	No.	SUPER DISP.			
A06	S PHOTO		Voltage value 0.0V | 5.0V	Indication of the detection voltage of the photosensor for start and end detection on the S-side This is used for adjustment of the sensitivity of the photosensor. 【Operation:】 1. Switch to EJECT mode. 2. Select the item. 3. The voltage value will be displayed. 4. Insert a cassette for sensitivity adjustment. The cassette will stop at the DOWN position. 5. Adjust the sensitivity with the VR on the MECHA_IF. 6. The cassette will be ejected when the cursor is moved to an item other than A05: T PHOTO or A06: S PHOTO.	×	
A07	TENSION	0 1	Non-display ON	Loading operation for tension offset adjustment 【Operation:】 1. Switch to EJECT mode. 2. Switch the set value to ON. Loading will be performed to the loading completion position. 3. Unloading will be performed when the set value is switched to OFF or when the cursor is moved to another item.	×	
A08	RPL GAIN 18K	−128 | −70 | 0	−128 | −70 | 0	Adjustment of the ATF prefilter gain of the RPL1,RPL2 head (For DVCPRO18000rpm, forced switching to DVCPRO25Mbps, 18000rpm mode.)	○	
A09	RPL LIN 18K	0 1	Non-display ON	Adjustment of the LISTA linearity of the RPL1, RPL2 head (For DVCPRO18000rpm, forced switching to DVCPRO25Mbps, 18000rpm mode.)	×	
A10	PBL GAIN 18K	−128 | −50 | 0	−128 | −50 | 0	Adjustment of the ATF prefilter gain of the PBL1,PBL2 head (For DVCPRO18000rpm, forced switching to DVCPRO25Mbps, 18000rpm mode.)	○	
A11	PBL LIN 18K	0 1	Non-display ON	Adjustment of the LISTA linearity for the PBL1, PBL2 head (For DVCPRO18000rpm,forced switching to DVCPRO25Mbps, 18000rpm mode.)	×	
A12	PBR GAIN 18K	−128 | −90 | 0	−128 | −90 | 0	Adjustment of the ATF prefilter gain of the PBR1,PBR2 head (For DVCPRO18000rpm,forced switching to DVCPRO25Mbps, 18000rpm mode.)	○	
A13	RPL GAIN 9K	−128 | −70 | 0	−128 | −70 | 0	Adjustment of the ATF prefilter gain of the RPL1, RPL2 head (For DVCPRO9000rpm,forced switching to DVCPRO25Mbps, 9000rpm mode.)	○	
A14	RPL LIN 9K	0 1	Non-display ON	Adjustment of the LISTA linearity of the RPL1,RPL2 head (For DVCPRO9000rpm,forced switching to DVCPRO25Mbps, 9000rpm mode.)	×	
A15	PBL GAIN 9K	−128 | −50 | 0	−128 | −50 | 0	Adjustment of the ATF prefilter gain of the PBL1, PBL2 head (For DVCPRO9000rpm,forced switching to DVCPRO25Mbps, 9000rpm mode.)	○	
A16	PBL LIN 9K	0 1	Non-display ON	Adjustment of the LISTA linearity for the PBL1, PBL2 head (For DVCPRO9000rpm,forced switching to DVCPRO25Mbps, 9000rpm mode.)	×	
A17	PBR GAIN 9K	−128 | −90 | 0	−128 | −90 | 0	Adjustment of the ATF prefilter gain of the PBR1,PBR2 head (For DVCPRO9000rpm,forced switching to DVCPRO25Mbps, 9000rpm mode.)	○	
A18	RPR GAIN DV	−128 | −70 | 0	−128 | −70 | 0	Not used	○	

Item		Set value		Setting contents and outline function explanation	BACK -UP	Remarks
No.	SUPER DISP.	No.	SUPER DISP.			
A19	X VALUE 18K	−128 | 0 | 127	−128 | 0 | 127	Electrical fine adjustment of the X-value (For DVCPRO18000rpm,forced switching to DVCPRO25Mbps, 18000rpm mode.) 【Operation:】 1. Switch to PLAY mode. 2. Keep pressing the SEARCH button. The set value display will go out and automatic adjustment will start. 3. Adjustment is completed when the set value is displayed. Release the SEARCH button.	○	
A20	X VALUE 9K	−128 | 0 | 127	−128 | 0 | 127	Electrical fine adjustment of the X-value (For DVCPRO9000rpm,forced switching to DVCPRO25Mbps, 9000rpm mode.) 【Operation:】 1. Switch to PLAY mode. 2. Keep pressing the SEARCH button. The set value display will go out and automatic adjustment will start. 3. Adjustment is completed when the set value is displayed. Release the SEARCH button.	○	Presently no correspondence
A21	ENV SEL 18K	0	RP/PB	Select the envelope output confirmation head. (For DVCPRO18000rpm,forced switching to DVCPRO25Mbps, 18000rpm mode.) ・CTL syncro playback is performed, and syncronizing is done to the phase which permits confirmation of the envelope output of the selected head. ・Fine adjustment is performed with A22: TRK VAL 18K.	×	
A22	TRK VAL 18K	−128 | 0 | 127	−128 | 0 | 127	Set the CTL tracking offset value. (For DVCPRO18000rpm,forced switching to DVCPRO25Mbps, 18000rpm mode.)	×	
A23	ENV SEL 9K	0	RP/PB	Select the envelope output confirmation head. (For DVCPRO9000rpm,forced switching to DVCPRO25Mbps, 9000rpm mode.) ・CTL syncro playback is performed, and syncronizing is done to the phase which permits confirmation of the envelope output of the selected head. ・Fine adjustment is performed with A24: TRK VAL 9K.	×	
A24	TRK VAL 9K	−128 | 0 | 127	−128 | 0 | 127	Set the CTL tracking offset value. (For DVCPRO9000rpm,forced switching to DVCPRO25Mbps9000rpm mode.)	×	

B00: RF ADJUST

RF ADJUST has a subscreen, and there is a hierarchical structure for each format and each head.

RF ADJUST subscreen

Item		Item contents
No.	SUPER DISP.	
C00	DVCPRO 18000 ADJUST	Adjustment for DVCPRO18000 · Forced switching to DVCPRO 25Mbps, 18000rpm mode when entering into the subscreen.
D00	DVCPRO 9000 ADJUST	Adjustment for DVCPRO 9000 · Forced switching to DVCPRO 25Mbps, 9000rpm mode when entering into the subscreen.
E00	DV9000 ADJUST	Not used

DVCPRO 18000 ADJUST subscreen

Item		Item contents
No.	SUPER DISP.	
C-1	REC L ADJUST	Adjustment of the recording system (RPL1, RPL2) for DVCPRO18000rpm
C-2	REC R ADJUST	Adjustment of the recording system (RPR1, RPR2 head) for DVCPRO18000rpm
C-3	PB L ADJUST	Adjustment of the playback system (PBL1, PBL2 head) for DVCPRO18000rpm
C-3	PB R ADJUST	Adjustment of the playback system (PBR1, PBL2 head) for DVCPRO18000rpm
C-5	RP L ADJUST	Adjustment of the playback system (RPL1, RP2 head) for DVCPRO18000rpm
C-6	RP R ADJUST	Adjustment of the playback system (RP1, RP2 head) for DVCPRO18000rpm
C-7	DEFAULT	LOAD/SAVE of the factory default adjustment values/initial values LOAD operation · Perform operation in regard to the adjustment values for DVCPRO18000rpm. · Operation is effective only after completion of loading. 【Operation:】 1. Move the cursor to C-7: DEFAULT. 2. Turn the search dial and move the cursor to the desired operation item. SAVE ... Save the present set values as the factory default values. LOAD ... Load the saved factory default values as the present set values. (When SAVE operation has not been performed, the initial values will be loaded.) INIT LOAD ... Load the initial values as the present set values. 3. When the SET button is pressed, the selected operation will be performed and return will be made to the item setting screen. When the MENU button is pressed, no operation will be performed and return will be made to the item setting screen.

DVCPRO 9000 ADJUST subscreen

Item		Item contents
No.	SUPER DISP.	
D-1	REC L ADJUST	Adjustment of the recording system(RPL1, RPL2) for DVCPRO 9000rpm
D-2	REC R ADJUST	Adjustment of the recording system(RPR1, RPR2 head) for DVCPRO 9000rpm
D-3	PB L ADJUST	Adjustment of the playback system (PBL1, PBL2 head) for DVCPRO 9000rpm
D-4	RB R ADJUST	Adjustment of the playback system (PBR1, PBR2 head) for DVCPRO 9000rpm
D-5	RP L ADJUST	Adjustment of the playback system (RPL1, RP2 head) for DVCPRO 9000rpm
D-6	RP R ADJUST	Adjustment of the playback system (RPR1, RPR2 head) for DVCPRO 9000rpm
D-7	DEFAULT	LOAD/SAVE of the factory default adjustment values/initial values LOAD operation ・ Perform operation in regard to the adjustment values for DVCPRO 9000rpm. ・ Operation is effective only after completion of loading. 【Operation:】 1. Move the cursor to D-7: DEFAULT. 2. Turn the search dial and move the cursor to the desired operation item. SAVE ... Save the present set values as the factory default values. LOAD ... Load the saved factory default values as the present set values. (When SAVE operation has not been performed, the initial values will be loaded.) INIT LOAD ... Load the initial values as the present set values. 3. When the SET button is pressed, the selected operation will be performed and return will be made to the item setting screen. When the MENU button is pressed, no operation will be performed and return will be made to the item setting screen.

DV 9000 subscreen

Item		Item contents
No.	SUPER DISP.	
E-1	RP L ADJUST	Not used
E-2	RP R ADJUST	Not used
E-3	DEFAULT	Not used

REC L ADJUST (DVCPRO18000 ADJUST, DVCPRO 9000 ADJUST subscreen)

Item		Set value		Setting contents and outline function explanation	BACK -UP	Remarks
No.	SUPER DISP.	No.	SUPER DISP.			
C01 D01	REC CURR L1	C01		Adjustment of the RPL1 head recording current	○	
		-128 | 0 | 127	-128 | 0 | 127			
		D01				
		-128 | -20 | 127	-128 | -20 | 127			
C02 D02	REC FREQ L1	C02		Adjustment of the RPL1 head recording f characteristic	○	
		-128 | 0 | 127	-128 | 0 | 127			
		D02				
		-128 | -70 | 127	-128 | -70 | 127			
C03 D03	REC CURR L2	C03		Adjustment of the RPL2 head recording current	○	
		-128 | 0 | 127	-128 | 0 | 127			
		D03				
		-128 | -20 | 127	-128 | -20 | 127			
C04 D04	REC FREQ L2	C04		Adjustment of the RPL2 head recording f characteristic	○	
		-128 | 0 | 127	-128 | 0 | 127			
		D04				
		-128 | -70 | 127	-128 | -70 | 127			
C05 D05	RE CURR L1	-128 | 30 | 127	-128 | 30 | 127	Adjustment of the RE L1 head erase current	○	

Item		Set value		Setting contents and outline function explanation	BACK -UP	Remarks
No.	SUPER DISP.	No.	SUPER DISP.			
C06 D06	RE CURR L2	−128 | 30 | 127	−128 | 30 | 127	Adjustment of the REL2 head erase current	○	
C07 D07	ADJUST MODE	0 1	OFF ON	Setting of recording adjustment mode. ・The setting is held until exit from DVCPRO 18000 ADJUST, DVCPRO9000 ADJUST.	×	
C08 D08	BPF FREQ	0 1	HIGH LOW	BPF band setting for recording adjustment ・The setting is held until exit from DVCPRO 18000 ADJUST, DVCPRO9000 ADJUST.	×	
C09 D09	XCAN MODE	0 1	OFF ON	Crosstalk canceler ON/OFF setting ・The setting is held until exit from DVCPRO 18000 ADJUST, DVCPRO9000 ADJUST.	×	
C10 D10	VITERBI MODE	0 1	OFF ON	Setting for whether viterbi decoding is to be performed or not for the playback data. ・The setting is held until exit from DVCPRO 18000 ADJUST, DVCPRO9000 ADJUST.	×	
C11 D11	EQ STB	0 1	OFF ON	ON/OFF setting for the automatic standby detection function Automatic standby detection function: When no playback envelope is detected for several seconds, shifting to standby mode is done automatically (playback processing is stopped and the mode for automatic adjustment of the VCO center frequency is entered). ・The setting is held until exit from DVCPRO 18000 ADJUST, DVCPRO9000 ADJUST.	×	
C12 D12	AEQ MODE	0 1	OFF ON	Setting of the adaptive functions for the adaptive equalization filter ・The setting is held until exit from DVCPRO 18000 ADJUST, DVCPRO9000 ADJUST.	×	
C13 D13	AEQ HOLD	0 1	OFF ON	ON/OFF setting for the function for temporary holding of adaptive equalization control during the transitional period when the relative speed changes ・The setting is held until exit from DVCPRO 18000 ADJUST, DVCPRO9000 ADJUST.	×	
C14 D14	FLT MODE	0 1	OFF ON	ON/OFF setting for the fault detection function Fault detection function: At the time of mode shifting like search etc., this function detects the condition where the adaptive filter or the PLL falls into a divergent status and no normal signal is detected over a period of 5 tracks or more for each head, and in this case, the status of the adaptive filter or the PLL is returned to the initial status. ・The setting is held until exit from DVCPRO 18000 ADJUST, DVCPRO9000 ADJUST.	×	
C15 D15	PLL MONI	0 1	OFF ON	ON/OFF setting for PLL frequency monitor control Frequency monitor control: At the time of mode shifting during playback etc., this function detects the status where the playback clock frequency deviates for the specified time or longer from the permissible range set by MONI LIM PB1 and automatically returns this frequency to the reference frequency corresponding to the relative speed. ・The setting is held until exit from DVCPRO 18000 ADJUST, DVCPRO9000 ADJUST.	×	

Item		Set value		Setting contents and outline function explanation	BACK -UP	Remarks
No.	SUPER DISP.	No.	SUPER DISP.			
C16 D16	ECC MODE	0 1 2	ALL ON OT OFF AL OFF	Setting of error correction control 0: Error correction for INNER and OUTER. 1: Error correction only for INNER, but not for OUTER. 2: No error correction for INNER and OUTER. ・The setting is held until exit from 18000 ADJUST, 9000 ADJUST.	×	
C17 D17	CONCEAL MOD	0 1	ON OFF	Setting of error revision control 0: Error revision is performed. 1: Error revision is not performed. ・The setting is held until exit from 18000 ADJUST, 9000 ADJUST.	×	
C18 D18	ERROR MODE	0 1	FAST SLOW	Setting of the error sampling time 0: FAST mode 1: SLOW mode ・The setting is held until exit from 18000 ADJUST, 9000 ADJUST.	×	
C19 D19	TRACKING MOD	0 1	ATF CTL	Tracking mode setting 0: ATF tracking 1: CTL tracking ・The setting is held until exit from 18000 ADJUST, 9000 ADJUST.	×	
C20 D20	TRACKING VAL	−128 | 0 | 127	−128 | 0 | 127	Offset value setting for CTL tracking ・Effective only at the time of TRACKING MOD = CTL. ・The setting is held until exit from 18000 ADJUST, 9000 ADJUST.	×	
C21 D21	ATF HEAD	0 1	PB PR	Head selection for ATF tracking 0:PB 1:RP ・The setting is held until exit from 18000 ADJUST, 9000 ADJUST.	×	
C22 D22	FORCE CF MOD	0 1 2	OFF CF NOR CF REV	Force CF mode setting. 0:Force CF mode is OFF 1:The track is played/ Recorded with the head which is used in recording on it. 2:The track is played/ Recorded with the other head.	×	

REC R ADJUST (DVCPRO18000 ADJUST, DVCPRO 9000 ADJUST subscreen)

Item		Set value		Setting contents and outline function explanation	BACK -UP	Remarks
No.	SUPER DISP.	No.	SUPER DISP.			
C01 D01	REC CURR R1	C01 −128 | 0 | 127 D01 −128 | −20 | 127	C01 −128 | 0 | 127 D01 −128 | −20 | 127	Adjustment of the RPR1 head recording current	○	
C02 D02	REC FREQ R1	C02 −128 | 0 | 127 D02 −128 | −70 | 127	C02 −128 | 0 | 127 D02 −128 | −70 | 127	Adjustment of the RPR1 head recording f characteristic	○	
C03 D03	REC CURR R2	C03 −128 | 0 | 127 D03 −128 | −20 | 127	C03 −128 | 0 | 127 D03 −128 | −20 | 127	Adjustment of the RPR2 head recording current	○	
C04 D04	REC FREQ R2	C04 −128 | 0 | 127 D04 −128 | −70 | 127	C04 −128 | 0 | 127 D04 −128 | −70 | 127	Adjustment of the RPR2 head recording f characteristic	○	
C05 D05	RE CURR R1	−128 | 30 | 127	−128 | 30 | 127	Adjustment of the RE R1 head erase current	○	
C06 D06	RE CURR R2	−128 | 30 | 127	−128 | 30 | 127	Adjustment of the RER2 head erase current	○	
C07 D07	ADJUST MODE	0 1	OFF ON	Setting of recording adjustment mode. ・The setting is held until exit from DVCPRO 18000 ADJUST, DVCPRO9000 ADJUST.	×	
C08 D08	BPF FREQ	0 1	HIGH LOW	BPF band setting for recording adjustment ・The setting is held until exit from DVCPRO 18000 ADJUST, DVCPRO9000 ADJUST.	×	
C09 D09	XCAN MODE	0 1	OFF ON	Crosstalk canceler ON/OFF setting ・The setting is held until exit from DVCPRO 18000 ADJUST, DVCPRO9000 ADJUST.	×	

Item		Set value		Setting contents and outline function explanation	BACK -UP	Remarks
No.	SUPER DISP.	No.	SUPER DISP.			
C10 D10	VITERBI MODE	0 1	OFF ON	Setting for whether viterbi decoding is to be performed or not for the playback data. ・The setting is held until exit from DVCPRO 18000 ADJUST, DVCPRO9000 ADJUST.	×	
C11 D11	EQ STB	0 1	OFF ON	ON/OFF setting for the automatic standby detection function Automatic standby detection function: When no playback envelope is detected for several seconds, shifting to standby mode is done automatically (playback processing is stopped and the mode for automatic adjustment of the VCO center frequency is entered). ・The setting is held until exit from DVCPRO 18000 ADJUST, DVCPRO9000 ADJUST.	×	
C12 D12	AEQ MODE	0 1	OFF ON	Setting of the adaptive functions for the adaptive equalization filter ・The setting is held until exit from DVCPRO 18000 ADJUST, DVCPRO9000 ADJUST.	×	
C13 D13	AEQ HOLD	0 1	OFF ON	ON/OFF setting for the function for temporary holding of adaptive equalization control during the transitional period when the relative speed changes ・The setting is held until exit from DVCPRO 18000 ADJUST, DVCPRO9000 ADJUST.	×	
C14 D14	FLT MODE	0 1	OFF ON	ON/OFF setting for the fault detection function Fault detection function: At the time of mode shifting like search etc., this function detects the condition where the adaptive filter or the PLL falls into a divergent status and no normal signal is detected over a period of 5 tracks or more for each head, and in this case, the status of the adaptive filter or the PLL is returned to the initial status. ・The setting is held until exit from DVCPRO 18000 ADJUST, DVCPRO9000 ADJUST.	×	
C15 D15	PLL MONI	0 1	OFF ON	ON/OFF setting for PLL frequency monitor control Frequency monitor control: At the time of mode shifting during playback etc., this function detects the status where the playback clock frequency deviates for the specified time or longer from the permissible range set by MONI LIM PB1 and automatically returns this frequency to the reference frequency corresponding to the relative speed. ・The setting is held until exit from DVCPRO 18000 ADJUST, DVCPRO9000 ADJUST.	×	
C16 D16	ECC MODE	0 1 2	ALL ON OT OFF AL OFF	Setting of error correction control 0: Error correction for INNER and OUTER. 1: Error correction only for INNER, but not for OUTER. 2: No error correction for INNER and OUTER. ・The setting is held until exit from 18000 ADJUST, 9000 ADJUST.	×	
C17 D17	CONCEAL MOD	0 1	ON OFF	Setting of error revision control 0: Error revision is performed. 1: Error revision is not performed. ・The setting is held until exit from 18000 ADJUST, 9000 ADJUST.	×	
C18 D18	ERROR MODE	0 1	FAST SLOW	Setting of the error sampling time 0: FAST mode 1: SLOW mode ・The setting is held until exit from 18000 ADJUST, 9000 ADJUST.	×	
C19 D19	TRACKING MOD	0 1	ATF CTL	Tracking mode setting 0: ATF tracking 1: CTL tracking ・The setting is held until exit from 18000 ADJUST, 9000 ADJUST.	×	
C20 D20	TRACKING VAL	−128 | 0 | 127	−128 | 0 | 127	Offset value setting for CTL tracking ・Effective only at the time of TRACKING MOD = CTL. ・The setting is held until exit from 18000 ADJUST, 9000 ADJUST.	×	

Item		Set value		Setting contents and outline function explanation	BACK -UP	Remarks
No.	SUPER DISP.	No.	SUPER DISP.			
C21 D21	ATF HEAD	0 1	PB PR	Head selection for ATF tracking 0:PB 1:RP ・The setting is held until exit from 18000 ADJUST, 9000 ADJUST.	×	
C22 D22	FORCE CF MOD	0 1 2	OFF CF NOR CF REV	Force CF mode setting. 0:Force CF mode is OFF 1:The track is played/ Recorded with the head which is used in recording on it. 2:The track is played/ Recorded with the other head.	×	

PB L ADJUST (DVCPRO 1800M ADJUST, DVCPRO 9000M ADJUST subscreen)

Item		Set value		Setting contents and outline function explanation	BACK -UP	Remarks
No.	SUPER DISP.	No.	SUPER DISP.			
C01 D01	PHS PB L1	−128 | 20 | 127	−128 | 20 | 127	Adjustment of the PBL1 head playback phase	○	
C02 D02	PHS PB L2	−128 | 20 | 127	−128 | 20 | 127	Adjustment of the PBL2 head playback phase	○	
C03 D03	MAG PB L1	−128 | −20 | 127	−128 | −20 | 127	Adjustment of the PBL1 head playback amplitude	○	
C04 D04	MAG PB L2	−128 | −20 | 127	−128 | −20 | 127	Adjustment of the PBL2 head playback amplitude	○	
C05 D05	ENV PB L1	0 | 255	0 | 255	Playback signal envelope level read-out value averaged for each track of each head ENV PB L1: PBL1 head ENV PB L2: PBR3 head Averaging is performed at 8 points in the track, and the newest track value for which averaging has been completed at the time when read-out is started will be read out. ・ Read-out is possible only at the time of PLAY and REC. ・ The value is held until PBL ADJUST is left. 【Operation:】 ・ At the time of C31, D31: IC READ PBL = SINGLE Read-out and display are performed each time the SET button is pressed. ・ At the time of C31, D31: IC READ PB1 = CONT Read-out and display are performed once every second.	×	
C06 D06	ENV PB L2	0 | 255	0 | 255		×	
C07 D07	AEQ SPD PB L	0 1 2 3	0 1 2 3	The control response speed for the adaptive equalization filter is set in four levels. The sensitivity is highest with 0 and lowest with 3.	○	
C08 D08	HLD SEN PBL	0 1 2 3	0 1 2 3	The detection sensitivity for detection of changes in the relative speed is set in four levels. The sensitivity is highest with 0 and lowest with 3.	○	
C09 D09	FLT SEN PB L	0 1 2 3	0 1 2 3	The detection sensitivity for the fault detection function is set in four levels. A fault status is detected when a normal signal can not be detected consecutively for 5 tracks over the following track values. 0 : 1/2 1 : 3/4 2 : 7/8 3 : 15/16	○	
C10 D10	PLLREV PB L	0 1	SLOW FAST	The compensation speed in PLL frequency compensation mode is set in two levels	○	
C11 D11	PLLPHS PBL	0 | 7 | 31	0 | 7 | 31	In the PLL response speed setting, mainly the phase pull-in speed is controlled. The response speed becomes faster with larger values.	○	
C12 D12	REV LEV PB L	0 1 2 3	0 1 2 3	The strength of the frequency pull-in operation of the PLL phase comparison characteristic expansion function is controlled in four levels. The action is weakest with 0 and strongest with 3. When the data acquisition ratio at the time of special playback is bad, it can be improved by controlling this parameter.	○	
C13 D13	PLL FRQ PB L	0 | 7 | 31	0 | 7 | 31	The setting of the PLL response speed controls mainly the frequency pull-in speed. The response becomes faster with larger values.	○	

Item		Set value		Setting contents and outline function explanation	BACK -UP	Remarks
No.	SUPER DISP.	No.	SUPER DISP.			
C14 D14	MONI LIM PB L	0 | 46 | 127	0 | 46 | 127	Setting of the frequency offset tolerance value for PLL frequency monitor control The actual tolerance range in regard to the reference frequency is ·(set value)/10.24%.	○	
C15 D15	TH EYE PB L	0 | 110 | 255	0 | 110 | 255	Setting of the threshold value for judging the signal quality after equalization The judgment result for the signal quality is used for adaptive equalization, PLL, fault detection function, and other control.	○	
C16 D16	TH ULK PB L	0 | 92 | 255	0 | 92 | 255	Setting of the threshold value for judging the signal quality after equalization The judgment result for the signal quality is used for adaptive equalization, PLL, fault detection function, and other control.	○	
C17 D17	TH ENV PB L	0 | 21 | 255	0 | 21 | 255	Setting of the threshold value for the envelope detection signal The envelope detection signal is used for adaptive equalization filter, PLL, and AGC hold control.	○	
C18 D18	VCO PB L	0 | 512 | 1023	0 | 512 | 1023	Setting of the initial value of the output voltage adjusting the VCO center frequency Adjustment is performed automatically in standby mode, but the time required for automatic adjustment can be reduced by setting this value in advance to a suitable value. The automatically adjusted value is read out and set. ・Read-out is possible only at the time of EJECT, STANDBY-OFF. ・ 【Operation:】 ・At the time of C31, D31: IC READ PB L = SINGLE Read-out and display are performed each time the SET button is pressed. ・At the time of C31, D31: IC READ PB L = CONT Read-out and display are performed once every second.	○	
C19 D19	T PB L1 3A	−31 | 0 | 31	−31 | 0 | 31	The initial values for six of the seven tap coefficients of the adaptive equalization filter, excluding the fixed center tap, are set for the PBL1 head. The tap coefficient values after adaptive equalization filter convergence at the time of standard tape playback are read out and set. ・Read-out is possible only at the time of PLAY, REC. 【Operation:】 ・At the time of C31, D31: IC READ PBL = SINGLE Read-out and display are performed each time the SET button is pressed. ・At the time of C31, D31: IC READ PBL = CONT Read-out and display are performed once every second.	○	
C20 D20	T PB L1 2A	−31 | 0 | 31	−31 | 0 | 31		○	
C21 D21	T PB L1 1A	−80 | −32 | −4	−80 | −32 | −4		○	
C22 D22	T PB1L 1B	−80 | −32 | −4	−80 | −32 | −4		○	
C23 D23	T PB L 2B	−31 | 0 | 31	−31 | 0 | 31		○	
C24 D24	T PB L 3B	−31 | 0 | 31	−31 | 0 | 31		○	

Item		Set value		Setting contents and outline function explanation	BACK -UP	Remarks
No.	SUPER DISP.	No.	SUPER DISP.			
C25 D25	T PB L2 3A	−31 | 0 | 31	−31 | 0 | 31	The initial values for six of the seven tap coefficients of the adaptive equalization filter, excluding the fixed center tap, are set for the PBL2 head. The tap coefficient values after adaptive equalization filter convergence at the time of standard tape playback are read out and set.	○	
C26 D26	T PB L2 2A	−31 | 0 | 31	−31 | 0 | 31	・Read-out is possible only at the time of PLAY, REC. 【Operation:】 ・At the time of C31, D31: IC READ PB L = SINGLE Read-out and display are performed each time the SET button is pressed. ・At the time of C31, D31: IC READ PB L = CONT Read-out and display are performed once every second.	○	
C27 D27	T PB L2 1A	−80 | −32 | −4	−80 | −32 | −4		○	
C28 D28	T PB L2 1B	−80 | −32 | −4	−80 | −32 | −4		○	
C29 D29	T PB L2 2B	−31 | 0 | 31	−31 | 0 | 31		○	
C30 D30	T PB L2 3B	−31 | 0 | 31	−31 | 0 | 31		○	
C31 D31	IC READ PB L	0 1 2	OFF SINGLE CONT	The following data are read out from the EQ100 IC. However, there are limitations according to the mode. Data which can be read-out only at the time of PLAY, REC ENV PB L1 ENV PB L2 T PB L1 3A T PB L1 2A T PB L1 1A T PB L1 1B T PB L1 2B T PB L1 3B T PB L2 3A T PB L2 2A T PB L2 1A T PB L2 1B T PB L2 2B T PB L2 3B Data which can be read-out only at the time of EJECT, STANDBY-OFF VCO PB L 0: No read-out 1: Read-out each time the SET button is pressed. 2: Read-out is performed once every second. ・The setting is held until exit from PB L ADJUST.	×	
C32 D32	VITERBI MODE	0 1	OFF ON	Setting whether Viterbi decoding is to be used for detection of playback data or not ・The setting is held until exit from DVCPRO 18000 ADJUST, DVCPRO9000 ADJUST.	×	
C33 D33	EQ STB	0 1	OFF ON	ON/OFF setting for the automatic standby detection function Automatic standby detection function: When the playback envelope is not detected for several seconds, the mode automatically shifts to standby mode (the mode where playback processing is stopped and the VCO center frequency is adjusted automatically). ・The setting is held until exit from DVCPRO 18000 ADJUST, DVCPRO9000 ADJUST.	×	
C34 D34	AEQ MODE	0 1	OFF ON	Setting of the adaptive function of the adaptive equalization filter ・The setting is held until exit from DVCPRO 18000 ADJUST, DVCPRO9000 ADJUST.	×	

Item		Set value		Setting contents and outline function explanation	BACK -UP	Remarks
No.	SUPER DISP.	No.	SUPER DISP.			
C35 D35	AEQ HOLD	0 1	OFF ON	ON/OFF setting for the function for temporary holding of adaptive equalization control during the transitional period when the relative speed changes ・The setting is held until exit from DVCPRO 18000 ADJUST, DVCPRO9000 ADJUST.	×	
C36 D36	FLT MODE	0 1	OFF ON	ON/OFF setting for the fault detection function Fault detection function: When the adaptive filter or the PLL drops into a divergent state at the time of mode switching like search etc., and a status is detected where no normal signal can be detected over a period of 5 tracks or more, this function pulls the status of the adaptive filter or the PLL to the initial status. ・The setting is held until exit from DVCPRO 18000 ADJUST, DVCPRO9000 ADJUST.	×	
C37 D37	PLL MONI	0 1	OFF ON	ON/OFF setting for PLL frequency monitor control Frequency monitor control: When a status is detected where the playback clock frequency at the time of mode switching during playback is outside the permissible range set by MONI LIM PBL for the specified time or longer, this function automatically pulls the frequency back to the reference frequency corresponding to the relative speed. ・The setting is held until exit from DVCPRO 18000 ADJUST, DVCPRO9000 ADJUST.	×	
C38 D38	ECC MODE	0 1 2	ALL ON OT OFF AL OFF	Setting of error correction control 0:Error correction for INNER and OUTER. 1:Error correction only for INNER, but not for OUTER. 2:No error correction for INNER and OUTER. ・The setting is held until exit from DVCPRO 18000 ADJUST, DVCPRO9000 ADJUST.	×	
C39 D39	CONCEAL MOD	0 1	ON OFF	Setting of error revision control 0:Error revision is performed. 1:Error revision is not performed. ・The setting is held until exit from DVCPRO 18000 ADJUST, DVCPRO9000 ADJUST.	×	
C40 D40	ERROR MODE	0 1	FAST SLOW	Setting of the error sampling time 0:FAST mode 1:SLOW mode ・The setting is held until exit from DVCPRO 18000 ADJUST, DVCPRO9000 ADJUST.	×	
C41 D41	TRACKING MOD	0 1	ATF CTL	Tracking mode setting 0:ATF tracking 1:CTL tracking ・The setting is held until exit from DVCPRO 18000 ADJUST, DVCPRO9000 ADJUST.	×	
C42 D42	TRACKING VAL	−128 | 0 | 127	−128 | 0 | 127	Offset value setting for CTL tracking ・Effective only at the time of TRACKING MOD = CTL. ・The setting is held until exit from DVCPRO 18000 ADJUST, DVCPRO9000 ADJUST.	×	
C43 D43	ATF HEAD	0 1	PB RP	Head selection for ATF tracking 0:PB 1:RP ・The setting is held until exit from DVCPRO 18000 ADJUST, DVCPRO9000 ADJUST.	×	
C44 D44	FORCE CF MOD	0 1 2	OFF CF NOR CF NOR	Force CF mode setting. 0:Force CF mode is OFF 1:The track is played/ Recorded with the head which is used in recording on it. 2:The track is played/ Recorded with the other head.	×	

PB R ADJUST (DVCPRO18000 ADJUST, DVCPRO9000 ADJUST subscreen)

Item		Set value		Setting contents and outline function explanation	BACK -UP	Remarks
No.	SUPER DISP.	No.	SUPER DISP.			
C01 D01	PHS PB R1	−128 | 20 | 127	−128 | 20 | 127	Adjustment of the PBR1 head playback phase	○	
C02 D02	PHS PB R2	−128 | 20 | 127	−128 | 20 | 127	Adjustment of the PBL2 head playback phase	○	
C03 D03	MAG PB R1	−128 | −20 | 127	−128 | −20 | 127	Adjustment of the PBR1 head playback phase	○	
C04 D04	MAG PB R2	−128 | −20 | 127	−128 | −20 | 127	Adjustment of the PBR2 head playback amplitude	○	
C05 D05	ENV PB R1	0 | 255	0 | 255	Playback signal envelope level read-out value averaged for each track of each head ENV PB R1: PBR1 head ENV PB R2: PBR2 head Averaging is performed at 8 points in the track, and the newest track value for which averaging has been completed at the time when read-out is started will be read out. ・ Read-out is possible only at the time of PLAY and REC. ・ The value is held until PB R ADJUST is left. 【Operation:】 ・ At the time of C31, D31: IC READ PBR = SINGLE Read-out and display are performed each time the SET button is pressed. ・ At the time of C31, D31: IC READ PBR = CONT Read-out and display are performed once every second.	×	
C06 D06	ENV PB R2	0 | 255	0 | 255		×	
C07 D07	AEQ SPD PB R	0 1 2 3	0 1 2 3	The control response speed for the adaptive equalization filter is set in four levels. The sensitivity is highest with 0 and lowest with 3.	○	
C08 D08	HLD SEN PB R	0 1 2 3	0 1 2 3	The detection sensitivity for detection of changes in the relative speed is set in four levels. The sensitivity is highest with 0 and lowest with 3.	○	
C09 D09	FLT SEN PB R	0 1 2 3	0 1 2 3	The detection sensitivity for the fault detection function is set in four levels. A fault status is detected when a normal signal can not be detected consecutively for 5 tracks over the following track values. 0 : 1/2 1 : 3/4 2 : 7/8 3 : 15/16	○	
C10 D10	PLLREV PB R	0 1	SLOW FAST	The compensation speed in PLL frequency compensation mode is set in two levels.	○	
C11 D11	PLLPHS PB R	0 | 7 | 31	0 | 7 | 31	In the PLL response speed setting, mainly the phase pull-in speed is controlled. The response speed becomes faster with larger values.	○	
C12 D12	REV LEV PB R	0 1 2 3	0 1 2 3	The strength of the frequency pull-in operation of the PLL phase comparison characteristic expansion function is controlled in four levels. The action is weakest with 0 and strongest with 3. When the data acquisition ratio at the time of special playback is bad, it can be improved by controlling this parameter.	○	
C13 D13	PLL FRQ PB R	0 | 7 | 31	0 | 7 | 31	The setting of the PLL response speed controls mainly the frequency	○	

Item		Set value		Setting contents and outline function explanation	BACK -UP	Remarks
No.	SUPER DISP.	No.	SUPER DISP.			
C14 D14	MONI LIM PB R	0 | 46 | 127	0 | 46 | 127	Setting of the frequency offset tolerance value for PLL frequency monitor control The actual tolerance range in regard to the reference frequency is ・(set value)/10.24%.	○	
C15 D15	TH EYE PB R	0 | 110 | 255	0 | 110 | 255	Setting of the threshold value for judging the signal quality after equalization The judgment result for the signal quality is used for adaptive equalization, PLL, fault detection function, and other control.	○	
C16 D16	TH ULK PB R	0 | 92 | 255	0 | 92 | 255	Setting of the threshold value for judging the signal quality after equalization The judgment result for the signal quality is used for adaptive equalization, PLL, fault detection function, and other control.	○	
C17 D17	TH ENV PB R	0 | 21 | 255	0 | 21 | 255	Setting of the threshold value for the envelope detection signal The envelope detection signal is used for adaptive equalization filter, PLL, and AGC hold control.	○	
C18 D18	VCO PB R	0 | 512 | 1023	0 | 512 | 1023	Setting of the initial value of the output voltage adjusting the VCO center frequency Adjustment is performed automatically in standby mode, but the time required for automatic adjustment can be reduced by setting this value in advance to a suitable value. The automatically adjusted value is read out and set. ・Read-out is possible only at the time of EJECT, STANDBY-OFF. 【Operation:】 ・At the time of C31, D31: IC READ PB R = SINGLE Read-out and display are performed each time the SET button is pressed. ・At the time of C31, D31: IC READ PB R = CONT Read-out and display are performed once every second.	○	
C19 D19	T PB R1 3A	−31 | 0 | 31	−31 | 0 | 31	The initial values for six of the seven tap coefficients of the adaptive equalization filter, excluding the fixed center tap, are set for the PBL1 head. The tap coefficient values after adaptive equalization filter convergence at the time of standard tape playback are read out and set. ・Read-out is possible only at the time of PLAY, REC. 【Operation:】 ・At the time of C31, D31: IC READ PB R = SINGLE Read-out and display are performed each time the SET button is pressed. ・At the time of C31, D31: IC READ PB R = CONT Read-out and display are performed once every second.	○	
C20 D20	T PB R1 2A	−31 | 0 | 31	−31 | 0 | 31		○	
C21 D21	T PB R1 1A	−80 | −32 | −4	−80 | −32 | −4		○	
C22 D22	T PB R1 1B	−80 | −32 | −4	−80 | −32 | −4		○	
C23 D23	T PB R1 2B	−31 | 0 | 31	−31 | 0 | 31		○	
C24 D24	T PB R1 3B	−31 | 0 | 31	−31 | 0 | 31		○	

Item No.	Item SUPER DISP.	Set value No.	Set value SUPER DISP.	Setting contents and outline function explanation	BACK -UP	Remarks
C25 D25	T PB R2 3A	−31 | 0 | 31	−31 | 0 | 31	The initial values for six of the seven tap coefficients of the adaptive equalization filter, excluding the fixed center tap, are set for the PBL3 head. The tap coefficient values after adaptive equalization filter convergence at the time of standard tape playback are read out and set.	○	
C26 D26	T PB R2 2A	−31 | 0 | 31	−31 | 0 | 31	・Read-out is possible only at the time of PLAY, REC. 【Operation:】 ・At the time of C31, D31: IC READ PB R = SINGLE Read-out and display are performed each time the SET button is pressed. ・At the time of C31, D31: IC READ PB R = CONT Read-out and display are performed once every second.	○	
C27 D27	T PB R2 1A	−80 | −32 | −4	−80 | −32 | −4		○	
C28 D28	T PB R2 1B	−80 | −32 | −4	−80 | −32 | −4		○	
C29 D29	T PB R2 2B	−31 | 0 | 31	−31 | 0 | 31		○	
C30 D30	T PB R2 3B	−31 | 0 | 31	−31 | 0 | 31		○	
C31 D31	IC READ PB2	0 1 2	OFF SINGLE CONT	The following data are read out from the EQ100 IC. However, there are limitations according to the mode. Data which can be read-out only at the time of PLAY, REC ENV PB R1 ENV PBR2 T PB R1 3A T PB R1 2A T PB2R 1A T PB R1 1B T PB R1 2B T PB R1 3B T PB R2 3A T PB R2 2A T PB R2 1A T PB R2 1B T PB R2 2B T PB R2 3B Data which can be read-out only at the time of EJECT, STANDBY-OFF VCO PB R 0: No read-out 1: Read-out each time the SET button is pressed. 2: Read-out is performed once every second. ・The setting is held until exit from PBR ADJUST.	×	
C32 D32	VITERBI MODE	0 1	OFF ON	Setting whether Viterbi decoding is to be used for detection of playback data or not ・The setting is held until exit from DVCPRO18000 ADJUST, DVCPRO9000 ADJUST.	×	
C33 D33	EQ STB	0 1	OFF ON	ON/OFF setting for the automatic standby detection function Automatic standby detection function: When the playback envelope is not detected for several seconds, the mode automatically shifts to standby mode (the mode where playback processing is stopped and the VCO center frequency is adjusted automatically). ・The setting is held until exit from DVCPRO18000 ADJUST, DVCPRO9000 ADJUST.	×	
C34 D34	AEQ MODE	0 1	OFF ON	Setting of the adaptive function of the adaptive equalization filter ・The setting is held until exit from DVCPRO18000 ADJUST, DVCPRO9000 ADJUST.	×	

Item		Set value		Setting contents and outline function explanation	BACK -UP	Remarks
No.	SUPER DISP.	No.	SUPER DISP.			
C35 D35	AEQ HOLD	0 1	OFF ON	ON/OFF setting for the function for temporary holding of adaptive equalization control during the transitional period when the relative speed changes ・The setting is held until exit from DVCPRO18000 ADJUST, DVCPRO9000 ADJUST.	×	
C36 D36	FLT MODE	0 1	OFF ON	ON/OFF setting for the fault detection function Fault detection function: When the adaptive filter or the PLL drops into a divergent state at the time of mode switching like search etc., and a status is detected where no normal signal can be detected over a period of 5 tracks or more, this function pulls the status of the adaptive filter or the PLL to the initial status. ・The setting is held until exit from DVCPRO18000 ADJUST, DVCPRO9000 ADJUST.	×	
C37 D37	PLL MONI	0 1	OFF ON	ON/OFF setting for PLL frequency monitor control Frequency monitor control: When a status is detected where the playback clock frequency at the time of mode switching during playback is outside the permissible range set by MONI LIM PBL for the specified time or longer, this function automatically pulls the frequency back to the reference frequency corresponding to the relative speed. ・The setting is held until exit from DVCPRO18000 ADJUST, DVCPRO9000 ADJUST.	×	
C38 D38	ECC MODE	0 1 2	ALL ON OT OFF AL OFF	Setting of error correction control 0:Error correction for INNER and OUTER. 1:Error correction only for INNER, but not for OUTER. 2:No error correction for INNER and OUTER. ・The setting is held until exit from DVCPRO18000 ADJUST, DVCPRO9000 ADJUST.	×	
C39 D39	CONCEAL MOD	0 1	ON OFF	Setting of error revision control 0:Error revision is performed. 1:Error revision is not performed. ・The setting is held until exit from DVCPRO18000 ADJUST, DVCPRO9000 ADJUST.	×	
C40 D40	ERROR MODE	0 1	FAST SLOW	Setting of the error sampling time 0:FAST mode 1:SLOW mode ・The setting is held until exit from DVCPRO18000 ADJUST, DVCPRO9000 ADJUST.	×	
C41 D41	TRACKING MOD	0 1	ATF CTL	Tracking mode setting 0:ATF tracking 1:CTL tracking ・The setting is held until exit from DVCPRO18000 ADJUST, DVCPRO9000 ADJUST.	×	
C42 D42	TRACKING VAL	−128 | 0 | 127	−128 | 0 | 127	Offset value setting for CTL tracking ・Effective only at the time of TRACKING MOD = CTL. ・The setting is held until exit from DVCPRO18000 ADJUST, DVCPRO9000 ADJUST.	×	
C43 D43	ATF HEAD	0 1	PB RP	Head selection for ATF tracking 0:PB 1:RP ・The setting is held until exit from DVCPRO18000 ADJUST, DVCPRO9000 ADJUST.	×	
C44 D44	FORCE CF MODE	0 1 2	OFF CF NOR CF NOR	Force CF mode setting. 0:Force CF mode is OFF 1:The track is played/ Recorded with the head which is used in recording on it. 2:The track is played/ Recorded with the other head.	×	

RP L ADJUST (DVCPRO18000 ADJUST, DVCPRO9000 ADJUST, DV ADJUST subscreen)

Item		Set value		Setting contents and outline function explanation	BACK -UP	Remarks
No.	SUPER DISP.	No.	SUPER DISP.			
C01 D01 E01	PHS RP L1	−128 | 20 | 127	−128 | 20 | 127	Adjustment of the RPL1 head playback phase	○	
C02 D02 E02	PHS RP L2	−128 | 20 | 127	−128 | 20 | 127	Adjustment of the RPL2 head playback phase	○	
C03 D03 E03	MAG RP L1	C03, D03 −128 | −20 | 127 E03 −128 | 20 | 127	C03, D03 −128 | −20 | 127 E03 −128 | 20 | 127	Adjustment of the RPL1 head playback amplitude	○	
C04 D04 E04	MAG RP L2	C04, D04 −128 | −20 | 127 E04 −128 | 20 | 127	C04, D04 −128 | −20 | 127 E04 −128 | 20 | 127	Adjustment of the RPL2 head playback amplitude	○	
C05 D05 E05	ENV RP L1	0 | 255	0 | 255	Playback signal envelope level read-out value averaged for each track of each head ENV RP L1: RPL1 head ENV RP L2: RPL2 head Averaging is performed at 8 points in the track, and the newest track value for which averaging has been completed at the time when read-out is started will be read out. ・ Read-out is possible only at the time of PLAY and REC. ・ The value is held until RP ADJUST is left. 【Operation:】 ・ At the time of C31, D31, E31: IC READ RP L = SINGLE Read-out and display are performed each time the SET button is pressed. ・ At the time of C31, D31, E31: IC READ RP L = CONT Read-out and display are performed once every second.	×	
C06 D06 E06	ENV RP L2	0 | 255	0 | 255		×	
C07 D07 E07	AEQ SPD RP L	0 1 2 3	0 1 2 3	The control response speed for the adaptive equalization filter is set in four levels. The sensitivity is highest with 0 and lowest with 3.	○	
C08 D08 E08	HLD SEN RP L	0 1 2 3	0 1 2 3	The detection sensitivity for detection of changes in the relative speed is set in four levels. The sensitivity is highest with 0 and lowest with 3.	○	
C09 D09 E09	FLT SEN RP L	0 1 2 3	0 1 2 3	The detection sensitivity for the fault detection function is set in four levels. A fault status is detected when a normal signal can not be detected consecutively for 5 tracks over the following track values. 0:1/2 1:3/4 2:7/8 3:15/16	○	
C10 D10 E10	PLLREV RP L	0 1	SLOW FAST	The compensation speed in PLL frequency compensation mode is set in two levels	○	

Item		Set value		Setting contents and outline function explanation	BACK -UP	Remarks
No.	SUPER DISP.	No.	SUPER DISP.			
C11 D11 E11	PLLPHS RP L	C11, D11 0 7 31 E11 0 11 31	C11, D11 0 7 31 E11 0 11 31	In the PLL response speed setting, mainly the phase pull-in speed is controlled. The response speed becomes faster with larger values.	○	
C12 D12 E12	REV LEV RP L	0 1 2 3	0 1 2 3	The strength of the frequency pull-in operation of the PLL phase comparison characteristic expansion function is controlled in four levels. The action is weakest with 0 and strongest with 3. When the data acquisition ratio at the time of special playback is bad, it can be improved by controlling this parameter.	○	
C13 D13 E13	PLL FRQ RP L	C13, D13 0 7 31 E13 0 1 31	C13, D13 0 7 31 E13 0 1 31	The setting of the PLL response speed controls mainly the frequency pull-in speed. The response becomes faster with larger values.	○	
C14 D14 E14	MONI LIM RP L	C14, D14, E14 0 46 127	C14, D14, E14 0 46 127	Setting of the frequency offset tolerance value for PLL frequency monitor control The actual tolerance range in regard to the reference frequency is ·(set value)/10.24%.	○	
C15 D15 E15	TH EYE RP L	0 110 255	0 110 255	Setting of the threshold value for judging the signal quality after equalization The judgment result for the signal quality is used for adaptive equalization, PLL, fault detection function, and other control.	○	
C16 D16 E16	TH ULK RP L	0 92 255	0 92 255	Setting of the threshold value for judging the signal quality after equalization. The judgment result for the signal quality is used for adaptive equalization, PLL, fault detection function, and other control.	○	
C17 D17 E17	TH ENV RP L	0 16 255	0 16 255	Setting of the threshold value for the envelope detection signal. The envelope detection signal is used for adaptive equalization filter, PLL, and AGC hold control.	○	
C18 D18 E18	VCO RP L	0 512 1023	0 512 1023	Setting of the initial value of the output voltage adjusting the VCO center frequency. Adjustment is performed automatically in standby mode, but the time required for automatic adjustment can be reduced by setting this value in advance to a suitable value. The automatically adjusted value is read out and set. ・ Read-out is possible only at the time of EJECT, STANDBY-OFF. 【Operation:】 ・ At the time of C31, D31, E31: IC READ RP L = SINGLE Read-out and display are performed each time the SET button is pressed. ・ At the time of C31, D31, E31: IC READ RP L = CONT Read-out and display are performed once every second.	○	

Item		Set value		Setting contents and outline function explanation	BACK -UP	Remarks
No.	SUPER DISP.	No.	SUPER DISP.			
C19 D19 E19	T RP L1 3A	−31 | 0 | 31	−31 | 0 | 31	The initial values for six of the seven tap coefficients of the adaptive equalization filter, excluding the fixed center tap, are set for the RPL1 head. The tap coefficient values after adaptive equalization filter convergence at the time of standard tape playback are read out and set. ・Read-out is possible only at the time of PLAY, REC. 【Operation:】 ・At the time of C31, D31, E31: IC READ RP L = SINGLE Read-out and display are performed each time the SET button is pressed. ・At the time of C31, D31, E31: IC READ RP L = CONT Read-out and display are performed once every second.	○	
C20 D20 E20	T RP L1 2A	−31 | 0 | 31	−31 | 0 | 31		○	
C21 D21 E21	T RP L1 1A	−80 | −32 | −4	−80 | −32 | −4		○	
C22 D22 E22	T RP L1 1B	−80 | −32 | −4	−80 | −32 | −4		○	
C23 D23 E23	T RP L1 2B	−31 | 0 | 31	−31 | 0 | 31		○	
C24 D24 E24	T RP L1 3B	−31 | 0 | 31	−31 | 0 | 31		○	
C25 D25 E25	T RP L2 3A	−31 | 0 | 31	−31 | 0 | 31	The initial values for six of the seven tap coefficients of the adaptive equalization filter, excluding the fixed center tap, are set for the RP L2 head. The tap coefficient values after adaptive equalization filter convergence at the time of standard tape playback are read out and set. ・Read-out is possible only at the time of PLAY, REC. 【Operation:】 ・At the time of C31, D31, E31: IC READ RPL = SINGLE Read-out and display are performed each time the SET button is pressed. ・At the time of C31, D31, E31: IC READ RPL = CONT Read-out and display are performed once every second.	○	
C26 D26 E26	T RP L2 2A	−31 | 0 | 31	−31 | 0 | 31		○	
C27 D27 E27	T RP L2 1A	−80 | −32 | −4	−80 | −32 | −4		○	
C28 D28 E28	T RP L2 1B	−80 | −32 | −4	−80 | −32 | −4		○	
C29 D29 E29	T RP L2 2B	−31 | 0 | 31	−31 | 0 | 31		○	
C30 D30 E30	T RP L2 3B	−31 | 0 | 31	−31 | 0 | 31		○	

Item		Set value		Setting contents and outline function explanation	BACK -UP	Remarks
No.	SUPER DISP.	No.	SUPER DISP.			
C31 D31 E31	IC READ RP L	0 1 2	OFF SINGLE CONT	The following data are read out from the EQ100 IC. However, there are limitations according to the mode. Data which can be read-out only at the time of PLAY, REC ENV RPL1 ENV RPL1 T RP L1 3A T RP L1 2A T RP L1 1A T RP L1 1B T RP L1 2B T RP 1L 3B T RP L2 3A T RP L2 2A T RP L2 1A T RP L2 1B T RP L2 2B T RP L2 3B Data which can be read-out only at the time of EJECT, STANDBY-OFF VCO RP L 0: No read-out 1: Read-out each time the SET button is pressed. 2: Read-out is performed once every second. ・The setting is held until exit from RP L ADJUST.	×	
C32 D32 E32	VITERBI MODE	0 1	OFF ON	Setting whether Viterbi decoding is to be used for detection of playback data or not ・The setting is held until exit from DVCPRO 18000 ADJUST, DVCPRO 9000 ADJUST.	×	
C33 D33 E33	EQ STB	0 1	OFF ON	ON/OFF setting for the automatic standby detection function Automatic standby detection function: When the playback envelope is not detected for several seconds, the mode automatically shifts to standby mode (the mode where playback processing is stopped and the VCO center frequency is adjusted automatically). ・The setting is held until exit from DVCPRO 18000 ADJUST DVCPRO 9000 ADJUST.	×	
C34 D34 E34	AEQ MODE	0 1	OFF ON	Setting of the adaptive function of the adaptive equalization filter ・The setting is held until exit from DVCPRO 18000 ADJUST, DVCPRO 9000 ADJUST.	×	
C35 D35 E35	AEQ HOLD	0 1	OFF ON	ON/OFF setting for the function for temporary holding of adaptive equalization control during the transitional period when the relative speed changes ・The setting is held until exit from VCPRO 18000 ADJUST DVCPRO 9000 ADJUST.	×	
C36 D36 E36	FLT MODE	0 1	OFF ON	ON/OFF setting for the fault detection function Fault detection function: When the adaptive filter or the PLL drops into a divergent state at the time of mode switching like search etc., and a status is detected where no normal signal can be detected over a period of 5 tracks or more, this function pulls the status of the adaptive filter or the PLL to the initial status. ・The setting is held until exit from DVCPRO 18000 ADJUST, DVCPRO 9000 ADJUST.	×	
C37 D37 E37	PLL MONI	0 1	OFF ON	ON/OFF setting for PLL frequency monitor control Frequency monitor control: When a status is detected where the playback clock frequency at the time of mode switching during playback is outside the permissible range set by MONI LIM RP for the specified time or longer, this function automatically pulls the frequency back to the reference frequency corresponding to the relative speed. ・The setting is held until exit from DVCPRO18000 ADJUST, DVCPRO9000 ADJUST.	×	
C38 D38 E38	ECC MODE	0 1 2	ALL ON OT OFF AL OFF	Setting of error correction control 0: Error correction for INNER and OUTER. 1: Error correction only for INNER, but not for OUTER. 2: No error correction for INNER and OUTER. ・The setting is held until exit from DCPRO18000 ADJUST, DVCPRO9000 ADJUST.	×	

Item		Set value		Setting contents and outline function explanation	BACK -UP	Remarks
No.	SUPER DISP.	No.	SUPER DISP.			
C39 D39 E39	CONCEAL MOD	0 1	ON OFF	Setting of error revision control 0 : Error revision is performed. 1 : Error revision is not performed. ・The setting is held until exit from DVCPRO 18000 ADJUST, DVCPRO 9000 ADJUST.	×	
C40 D40 E40	ERROR MODE	0 1	FAST SLOW	Setting of the error sampling time 0 : FAST mode 1 : SLOW mode ・The setting is held until exit from DVCPRO 18000 ADJUST, DVCPRO 9000 ADJUST.	×	
C41 D41 E41	TRACKING MOD	0 1	ATF CTL	Tracking mode setting 0 : ATF tracking 1 : CTL tracking ・The setting is held until exit from DVCPRO 18000 ADJUST, DVCPRO 9000 ADJUST.	×	
C42 D42 E42	TRACKING VAL	−128 | 0 | 127	−128 | 0 | 127	Offset value setting for CTL tracking ・Effective only at the time of TRACKING MOD = CTL. ・The setting is held until exit from DVCPRO 18000 ADJUST, DVCPRO 9000 ADJUST.	×	
C43 D43 E43	ATF HEAD	C43, D43 0 1 2 E43 1	 PB RP RP	Head selection for ATF tracking 0 : PB 1 : RP ・The setting is held until exit from DVCPRO18000 ADJUST, DVCPRO9000 ADJUST.	×	
C44 D44 E44	FORCE CF MOD	C44, D44 0 1 2 E44 0	 OFF CF NOR CD REV OFF	Force CF mode setting. 0 : Force CF mode is OFF 1 : The track is played/ Recorded with the head which is used in recording on it. 2 : The track is played/ Recorded with the other head.	×	

RP R ADJUST (DVCPRO 18000 ADJUST, DVCPRO 9000 ADJUST, DV ADJUST subscreen)

Item		Set value		Setting contents and outline function explanation	BACK -UP	Remarks
No.	SUPER DISP.	No.	SUPER DISP.			
C01 D01 E01	PHS RP R1	−128 | 20 | 127	−128 | 20 | 127	Adjustment of the RPR1 head playback phase	○	
C02 D02 E02	PHS RP R2	−128 | 20 | 127	−128 | 20 | 127	Adjustment of the RPR2 head playback phase	○	
C03 D03 E03	MAG RP R1	C03, D03 −128 | −20 | 127 E03 −128 | 20 | 127	C03, D03 −128 | −20 | 127 E03 −128 | 20 | 127	Adjustment of the RPR1 head playback phase	○	
C04 D04 E04	MAG RP R2	C04, D04 −128 | −20 | 127 E04 −128 | 20 | 127	C04, D04 −128 | −20 | 127 E04 −128 | 20 | 127	Adjustment of the RPR2 head playback amplitude	○	
C05 D05 E05	ENV RP R1	0 | 255	0 | 255	Playback signal envelope level read-out value averaged for each track of each head ENV RP R1: RPR1 head ENV RP R2: RPR2 head Averaging is performed at 8 points in the track, and the newest track value for which averaging has been completed at the time when read-out is started will be read out. ・ Read-out is possible only at the time of PLAY and REC. ・ The value is held until PB3 ADJUST is left. 【Operation:】 ・ At the time of C31, D31, E31: IC READ RP R = SINGLE Read-out and display are performed each time the SET button is pressed. ・ At the time of C31, D31, E31: IC READ RP R = CONT Read-out and display are performed once every second.	×	
C06 D06 E06	ENV RP R2	0 | 255	0 | 255		×	
C07 D07 E07	AEQ SPD RP R	0 1 2 3	0 1 2 3	The control response speed for the adaptive equalization filter is set in four levels. The sensitivity is highest with 0 and lowest with 3.	○	
C08 D08 E08	HLD SEN RP R	0 1 2 3	0 1 2 3	The detection sensitivity for detection of changes in the relative speed is set in four levels. The sensitivity is highest with 0 and lowest with 3.	○	
C09 D09 E09	FLT SEN RP R	0 1 2 3	0 1 2 3	The detection sensitivity for the fault detection function is set in four levels. A fault status is detected when a normal signal can not be detected consecutively for 5 tracks over the following track values. 0:1/2 1:3/4 2:7/8 3:15/16	○	
C10 D10 E10	PLLREV RP R	0 1	SLOW FAST	he compensation speed in PLL frequency compensation mode is set in two levels	○	

Item		Set value		Setting contents and outline function explanation	BACK -UP	Remarks
No.	SUPER DISP.	No.	SUPER DISP.			
C11 D11 E11	PLL PHS RP R	C11, D11		In the PLL response speed setting, mainly the phase pull-in speed is controlled. The response speed becomes faster with larger values.	○	
		0 | 7 | 31	0 | 7 | 31			
		E11				
		0 | 11 | 31	0 | 11 | 31			
C12 D12 E12	REV LEV RP R	0 1 2 3	0 1 2 3	The strength of the frequency pull-in operation of the PLL phase comparison characteristic expansion function is controlled in four levels. The action is weakest with 0 and strongest with 3. When the data acquisition ratio at the time of special playback is bad, it can be improved by controlling this parameter.		
C13 D13 E13	PLL FRQ RP R	C13, D13		The setting of the PLL response speed controls mainly the frequency pull-in speed. The response becomes faster with larger values.	○	
		0 | 7 | 31	0 | 7 | 31			
		E13				
		0 | 1 | 31	0 | 1 | 31			
C14 D14 E14	MONI LIM PBR	C14, D14, E14		Setting of the frequency offset tolerance value for PLL frequency monitor control The actual tolerance range in regard to the reference frequency is ±(set value)/10.24%.	○	
		0 | 46 | 127	0 | 46 | 127			
C15 D15 E15	TH EYE RP R	0 | 110 | 255	0 | 110 | 255	Setting of the threshold value for judging the signal quality after equalization The judgment result for the signal quality is used for adaptive equalization, PLL, fault detection function, and other control.	○	
C16 D16 E16	TH ULK RP R	0 | 92 | 255	0 | 92 | 255	Setting of the threshold value for judging the signal quality after equalization The judgment result for the signal quality is used for adaptive equalization, PLL, fault detection function, and other control.	○	
C17 D17 E17	TH ENV RP R	C17, D17		Setting of the threshold value for the envelope detection signal The envelope detection signal is used for adaptive equalization filter, PLL, and AGC hold control.	○	
		0 | 21 | 255	0 | 21 | 255			
		E17				
		0 | 16 | 255	0 | 16 | 255			

Item		Set value		Setting contents and outline function explanation	BACK -UP	Remarks
No.	SUPER DISP.	No.	SUPER DISP.			
C18 D18 E18	VCO RP R	0 | 512 | 1023	0 | 512 | 1023	Setting of the initial value of the output voltage adjusting the VCO center frequency Adjustment is performed automatically in standby mode, but the time required for automatic adjustment can be reduced by setting this value in advance to a suitable value. The automatically adjusted value is read out and set. ・Read-out is possible only at the time of EJECT, STANDBY-OFF. 【Operation:】 ・At the time of C31, D31, E31: IC READ RP L = SINGLE Read-out and display are performed each time the SET button is pressed. ・At the time of C31, D31, E31: IC READ RP L = CONT Read-out and display are performed once every second.	○	
C19 D19 E19	T RP R1 3A	−31 | 0 | 31	−31 | 0 | 31	The initial values for six of the seven tap coefficients of the adaptive equalization filter, excluding the fixed center tap, are set for the RPR1 head. The tap coefficient values after adaptive equalization filter convergence at the time of standard tape playback are read out and set. ・Read-out is possible only at the time of PLAY, REC. 【Operation:】 ・At the time of C31, D31, E31: IC READ RP R = SINGLE Read-out and display are performed each time the SET button is pressed. ・At the time of C31, D31, E31: IC READ RP R = CONT Read-out and display are performed once every second.	○	
C20 D20 E20	T RP R1 2A	−31 | 0 | 31	−31 | 0 | 31		○	
C21 D21 E21	T RP R1 1A	−80 | −32 | −4	−80 | −32 | −4		○	
C22 D22 E22	T RP R1 1B	−80 | −32 | −4	−80 | −32 | −4		○	
C23 D23 E23	T RP R1 2B	−31 | 0 | 31	−31 | 0 | 31		○	
C24 D24 E24	T RP R1 3B	−31 | 0 | 31	−31 | 0 | 31		○	

Item No.	Item SUPER DISP.	Set value No.	Set value SUPER DISP.	Setting contents and outline function explanation	BACK-UP	Remarks
C25 D25 E25	T RP R2 3A	−31 | 0 | 31	−31 | 0 | 31	The initial values for six of the seven tap coefficients of the adaptive equalization filter, excluding the fixed center tap, are set for the RP R2 head. The tap coefficient values after adaptive equalization filter convergence at the time of standard tape playback are read out and set. ・ Read-out is possible only at the time of PLAY, REC. 【Operation:】 ・ At the time of C31, D31, E31: IC READ RP R = SINGLE Read-out and display are performed each time the SET button is pressed. ・ At the time of C31, D31, E31: IC READ RP R = CONT Read-out and display are performed once every second.	○	
C26 D26 E26	T RP R2 2A	−31 | 0 | 31	−31 | 0 | 31		○	
C27 D27 E27	T RP R2 1A	−80 | −32 | −4	−80 | −32 | −4		○	
C28 D28 E28	T RP R2 1B	−80 | −32 | −4	−80 | −32 | −4		○	
C29 D29 E29	T RP R2 2B	−31 | 0 | 31	−31 | 0 | 31		○	
C30 D30 E30	T RP R2 3B	−31 | 0 | 31	−31 | 0 | 31		○	
C31 D31 E31	IC READ RP R	0 1 2	OFF SINGLE CONT	The following data are read out from the EQ100 IC. However, there are limitations according to the mode. Data which can be read-out only at the time of PLAY, REC ENV RPR1 — ENV RPR1 T RP R1 3A — T RP R1 2A T RP R1 1A T RP R1 1B — T RP R1 2B T RP R1 3B T RP R2 3A — T RP R2 2A T RP R2 1A T RP R2 1B — T RP R2 2B T RP R2 3B Data which can be read-out only at the time of EJECT, STANDBY-OFF VCO RP R 0: No read-out 1: Read-out each time the SET button is pressed. 2: Read-out is performed once every second. ・ The setting is held until exit from RP R ADJUST.	×	
C32 D32 E32	VITERBI MODE	0 1	OFF ON	Setting whether Viterbi decoding is to be used for detection of playback data or not ・ The setting is held until exit from DVCPRO 18000 ADJUST, DVCPRO 9000 ADJUST.	×	
C33 D33 E33	EQ STB	0 1	OFF ON	ON/OFF setting for the automatic standby detection function Automatic standby detection function: When the playback envelope is not detected for several seconds, the mode automatically shifts to standby mode (the mode where playback processing is stopped and the VCO center frequency is adjusted automatically). ・ The setting is held until exit from DVCPRO 18000 ADJUST, DVCPRO 9000 ADJUST.	×	
C34 D34 E34	AEQ MODE	0 1	OFF ON	Setting of the adaptive function of the adaptive equalization filter ・ The setting is held until exit from DVCPRO 18000 ADJUST, DVCPRO 9000 ADJUST, DV ADJUST.	×	
C35 D35 E35	AEQ HOLD	0 1	OFF ON	ON/OFF setting for the function for temporary holding of adaptive equalization control during the transitional period when the relative speed changes ・ *The setting is held until exit from DVCPRO 18000 ADJUST, DVCPRO 9000 ADJUST.	×	

Item		Set value		Setting contents and outline function explanation	BACK -UP	Remarks
No.	SUPER DISP.	No.	SUPER DISP.			
C36 D36 E36	FLT MODE	0 1	OFF ON	ON/OFF setting for the fault detection function Fault detection function: When the adaptive filter or the PLL drops into a divergent state at the time of mode switching like search etc., and a status is detected where no normal signal can be detected over a period of 5 tracks or more, this function pulls the status of the adaptive filter or the PLL to the initial status. ・The setting is held until exit from DVCPRO 18000 ADJUST, DVCPRO 9000 ADJUST.	×	
C37 D37 E37	PLL MONI	0 1	OFF ON	ON/OFF setting for PLL frequency monitor control Frequency monitor control: When a status is detected where the playback clock frequency at the time of mode switching during playback is outside the permissible range set by MONI LIM PB3 for the specified time or longer, this function automatically pulls the frequency back to the reference frequency corresponding to the relative speed. ・The setting is held until exit from DVCPRO 18000 ADJUST, DVCPRO 9000 ADJUST.	×	
C38 D38 E38	ECC MODE	0 1 2	ALL ON OT OFF AL OFF	Setting of error correction control 0:Error correction for INNER and OUTER. 1:Error correction only for INNER, but not for OUTER. 2:No error correction for INNER and OUTER. ・The setting is held until exit from DVCPRO 18000 ADJUST, DVCPRO 9000 ADJUST.	×	
C39 D39 E39	CONCEAL MOD	0 1	ON OFF	Setting of error revision control 0:Error revision is performed. 1:Error revision is not performed. ・The setting is held until exit from DVCPRO 18000 ADJUST, DVCPRO 9000 ADJUST.	×	
C40 D40 E40	ERROR MODE	0 1	FAST SLOW	Setting of the error sampling time 0:FAST mode 1:SLOW mode ・The setting is held until exit from DVCPRO 18000 ADJUST, DVCPRO 9000 ADJUST.	×	
C41 D41 E41	TRACKING MOD	0 1	ATF CTL	Tracking mode setting 0:ATF tracking 1:CTL tracking ・The setting is held until exit from DVCPRO 18000 ADJUST, DVCPRO 9000 ADJUST.	×	
C42 D42 E42	TRACKING VAL	−128 | 0 | 127	−128 | 0 | 127	Offset value setting for CTL tracking ・Effective only at the time of TRACKING MOD = CTL. ・The setting is held until exit from DVCPRO 18000 ADJUST, DVCPRO 9000 ADJUST.	×	
C43 D43 E43	ATF HEAD	C43, D43 0 1 E43 1	 PB RP RP	Head selection for ATF tracking 0:PB 1:RP ・The setting is held until exit from DVCPRO 18000 ADJUST, DVCPRO 9000 ADJUST, DV ADJUST.	×	
C44 D44 E44	FORCE CF MOD	C44, D44 0 1 2 E44 0	 OFF CF NOR CD REV OFF	Force CF mode setting. 0:Force CF mode is OFF 1:The track is played/ Recorded with the head which is used in recording on it. 2:The track is played/ Recorded with the other head.	×	

F00: VIDEO ADJUST

Item		Set value		Setting contents and outline function explanation	BACK -UP	Remarks
No.	SUPER DISP.	No.	SUPER DISP.			
F03	VIDEO MUTE	0 1	NORMAL MUTE	Select whether the VIDEO output is to be made gray or not 0 : Normal output 1 : Forced gray output	×	
F06	EE TEST MODE	0	NORMAL	EE check for the entire signal processing system 0 : NORMAL	×	
F10	TELETEXT INI	0 1	MOJI NABTS	Selection of the factory default values of 802: TELETEXT INI when factory default resetting has been performed by pressing the RESET key at the SETUP MENU. 0 : MOJI (shipping setting for T) 1 : NABTS (shipping setting for P, E)	○	
F11	V SETUP	0 1	OFF ON	Switching of effective/not effective for SETUP MENU 622: SETUP 25, 623: SETUP 50 0 : SETUP-MENU 622 : SETUP 25, 623 : SETUP 50 is not displayed and THRU is sent forcibly to AV. However, the backup value does not change. (Shipping setting for T) 1 : SETUP-MENU 622 : SETUP 25, 623 : SETUP 50 is displayed and the set value is sent to AV. (Shipping setting for P, E)	○	
F12	SDTI FORMAT	0 1	NORMAL THRU	Selection of SDTI system data rewriting or no rewriting 0 : Rewriting to conform to the format 1 : Output of the data from the tape as they are	×	
F13	SDTI ECC	0 1	OFF ON	Selection of SDTI error correction processing or no SDTI error correction processing for transmission and reception 0 : No error correction processing 1 : Error correction processing	×	
F15	22L BLANK	0 1	OFF ON	Switching of effective/not effective for SETUP MENU 805: 22 & 285 BLANK 0 : SETUP MENU 805: 22 & 285 BLANK is not displayed, and the set value is sent to AV forcibly as OFF. (Shipping setting for P, E) 1 : SETUP MENU 805: 22 & 285 BLANK is displayed and the set value is sent to AV. (Shipping setting for T)	○	

G00: AUDIO ADJUST

Item		Set value		Setting contents and outline function explanation	BACK -UP	Remarks
No.	SUPER DISP.	No.	SUPER DISP.			
G01	REF_LEVEL1	0 1 2	FS-20 FS-18 FS-12	Selection of the audio I/O reference level 0 : Full scale -20 dB (shipping setting for T, P) 1 : Full scale -18 dB (shipping setting for E) 2 : Full scale -12 dB ・Change of the set value is possible only when G02: REF_LEVEL2 = 0 dB has been set. ・At the time of FS.12 setting, there is no marker display when the front meter is in FINE mode display.	○	

Item		Set value		Setting contents and outline function explanation	BACK -UP	Remarks
No.	SUPER DISP.	No.	SUPER DISP.			
G02	REF_LEVEL2	0 1	0dB −3dB	Selection of the SETUP MENU set value for switching of the audio I/O reference level 0:The following items are displayed and 4 dB/0 dB/-20 dB (/-60 dB) switching is possible. 701:CH1 IN LV　706:CH1 OUT LV 702:CH2 IN LV　707:CH2 OUT LV 703:CH3 IN LV　708:CH3 OUT LV 704:CH4 IN LV　709:CH4 OUT LV 705:CUE IN LV　710:CUE OUT LV 711:MONIL OUT LV 712:MONIR OUT LV (Shipping setting for T, P, E) 1:Only 705: CUE IN LV is displayed and 4 dB/0 dB/-3 dB/-20 dB/-60 dB switching is possible. The following items are not displayed and they are fixed to -3 dB. 701:CH1 IN LV　706:CH1 OUT LV 702:CH2 IN LV　707:CH2 OUT LV 703:CH3 IN LV　708:CH3 OUT LV 704:CH4 IN LV　709:CH4 OUT LV 710:CUE OUT LV 711:MONIL OUT LV 712:MONIR OUT LV (Shipping setting for E) ・Set value change is possible only when G01: REF_LEVEL 1 = FS-18 has been set.	○	
G03	REF LV INI	0 1	0dB 4dB	Setting of the factory shipping value for the SETUP MENU for audio I/O reference level switching 701:CH1 IN LV　706:CH1 OUT LV 702:CH2 IN LV　707:CH2 OUT LV 703:CH3 IN LV　708:CH3 OUT LV 704:CH4 IN LV　709:CH4 OUT LV 705:CUE IN LV　710:CUE OUT LV 711:MONIL OUT LV 712:MONIR OUT LV 0:0dB (shipping setting for P, E) 1:4dB (shipping setting for T)	○	
G04	SDI ENC DLY	0 1	OFF ON	Setting whether the audio delay amount from SDI (ENC) is to be added or not 0:The delay of the OUT (ENC) side is not applied. 1:The delay of the OUT (ENC) side is applied.	○	
G05	MIC IN LV	0 1	DIS ENA	Setting whether "-60 dB" can be selected as the set value for the SETUP MENU for audio input reference level switching or not 701:CH1 IN LV 702:CH2 IN LV 703:CH3 IN LV 704:CH4 IN LV 0:4dB/ 0dB/ –20dB switching is possible. 1:4dB/ 0dB/ –20dB/ –60dB switching is possible. However, this is fixed to -3 dB,independent of the set value, when G02: REF_LEVEL 2 = -3 dB has been set.	○	
G06	AES PHS CORR	0 1	NOMAL OFF	Setting of phase mach for Vido output and AES/EBU output. 0:Perform phase maching 1:Not perfrom phase maching		

H00: OTHER ADJUST

Item		Set value		Setting contents and outline function explanation	BACK -UP	Remarks
No.	SUPER DISP.	No.	SUPER DISP.			
H02	LTC OUT SEL	0 1	N-STOP STOP	Selection of TC output according to the mode or not 0 : Output always, independent of the mode 1 : ON/OFF switching of the TC output according to the VTR mode. However, the TC output always is ON at the time of SETUP MENU 317: AUD MEM MODE = AMU_X, AMU_VO.	○	
H03	SYSTEM TYPE	0 1	TYPE 1 TYPE 2	Selection whether 2.3x speed is added to SHTL mode or not 0 : No 2.3 speed 1 : 2.3 speed exists	○	

TC output by the mode at the time of LTC OUT SEL = STOP setting

TC INT/EXT	Mode	VV / EE	TC output
INT	EJECT STOP STANDBY OFF JOG/VAR/SHTL STILL	—	OFF
	Others	—	ON
EXT	EJECT STOP STANDBY OFF JOG/VAR/SHTL STILL	VV (including BLACK, GRAY of EJECT)	OFF
		EE	ON
	Others	—	ON

16. Setup

Connect the Ser vice Front Panel Unit to AJ-DE97.
Refer to "***7, Connection of the Service Front Panel Unit***" in "***Section 2. Service Information***"

Changing the settings

1 Press the MENU button.
The setup menu appears on the TV monitor and setup menu No. appears on the counter display. (If the setup has already been performed, the screen showing the changes made last will appear.)

2 Rotate the search dial and select the item to be set.
The cursor (*) on the menu screen moves and the item No. on the display flashes.
- When the dial is rotated clockwise, the item No. is incremented from 001→002→ 003→004 and so on; when it is rotated counterclockwise, the item No. is decremented.
- The search dial should be used in jog mode if at all possible.
- Hold down the PLAY button and press the FF (next major item) or REW (previous major item) buttons to select the menu by major item.

3 While holding down the search button, rotate the search dial at the position where the change is to be made.
The setting No. now flashes.
When the dial is rotated clockwise, the setting value is incremented; when it is rotated counterclockwise, it is decremented.

4 Release the search button when the setting is completed.
The setting value on the menu screen and display flashes.
- During the SHTL mode, the item moves if the search dial is not at the STILL position.

5 Repeat steps 2 through 4 to change another item.

6 Press the SET button.
The changes are now stored in the memory.
- To return the items to the settings established before the changes were made, press the MENU button.

To return the setup settings to the factory (default) settings, press the RESET button while the menu is displayed. **The following message will now appear:**

SETUP-MENU INIT SET YES<PLAY>/NO<STOP>

When the PLAY button is pressed, the factory settings are restored.

<Note>
- When the RESET button is pressed to return to the factory settings, the factory settings are restored only for the user file currently being used and other user files are not affected.
- The changed SYSTEM menu contents are recorded even if the MENU button is pressed.

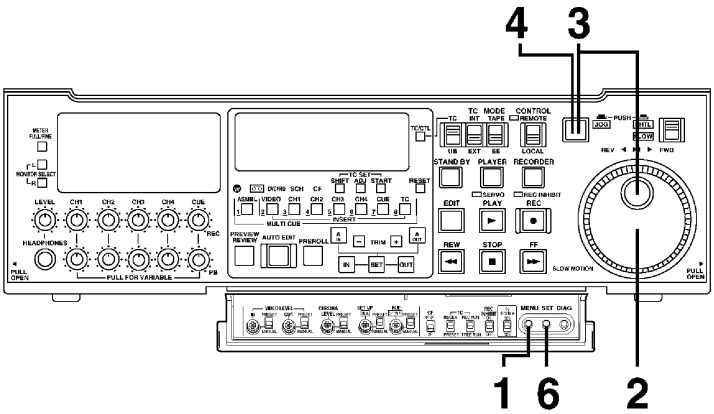

This unit can store up to 5 user files (user 1 to user 5) containing different menu settings, and these files can be selected and used.

Changing the file

1 Press the MENU button.

2 Hold down the STAND BY button and press the FF button to switch to the next user file.
Hold down the STAND BY button and press the REW button to switch to the previous user file.

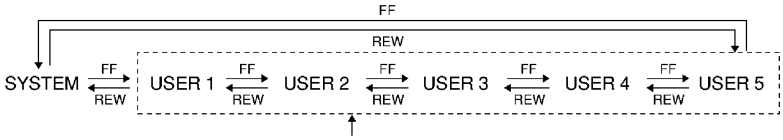

USER FILE
Each user file contains the following items.
- BASIC
- OPERATION
- INTERFACE
- EDIT
- TAPE PROTECT
- TIME CODE
- VIDEO
- AUDIO
- V BLANK
- MENU

3 Repeat the operation in step 2 to select the user file to be used and press the SET button. The user file is changed and stored in the memory.

<Note>
SYSTEM menu items are not included in user files 1 to 5.
Therefore, after selecting the user file, switch to the SYSTEM file and set the SYSTEM menu items.

Lock mode can be set to protect the settings in the system files and user files (USER2 – USER5). Settings can no longer be changed when this mode is set.
To set and release the lock mode for the system files and user files use setup item No. 30 (MENU LOCK) and setup menu item No. A03 (MENU LOCK), respectively.

Setting and releasing the lock mode.

1 Press the MENU button.

2 While holding down the STAND BY button, press the REW or FF button, and select the file for which the lock mode is to be set or released.

3 Turn the search dial and move the cursor (∗) on the menu screen to setup item No. 30 (MENU LOCK) or setup menu item No. A03 (MENU LOCK) for the system or user file.

4 While holding down the search button, turn the search dial and select lock mode setting or release.
To set the lock: Select the 0001 (ON) setting.
To release the lock: Select the 0000 (OFF) setting.

When the lock has been set, "LOCKED" flashes on the menu screen. In addition, the counter display stops flashing and lights.

```
SETUP-MENU  LOCKED
<USER2>    No.800 - 0005
*000 P-ROLL TIME      5s
 001 LOCAL ENA     ST&EJ
 002 TAPE TIMER     ±12h
 003 REMAIN SEL      OFF
 004 SETUP NUMBER    OFF
 005 METER SELECT    CUE
 006 SYNCHRONIZE     OFF
 007 SUPER            ON
 008 DISPLAY SEL   T&STA
```

5 Press the SET button. The setting is now stored in the memory.

<Notes>
- The lock mode cannot be set for the USER1 file settings.
- Even if the RESET button is pressed, the files which has been set to the lock mode cannot be reset to the factory settings.

The contents of the USER2 – USER5 files can be copied (loaded) into the USER1 file. In addition, the contents of the USER1 file can be copied (saved) to the USER2 – USER5 files.

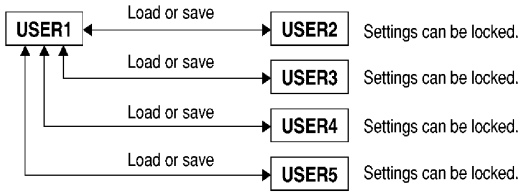

Loading a user file

1 Press the MENU button.

2 While holding down the STANDBY button, press the REW or FF button, and select USER1.

3 Turn the search dial and move the cursor (∗) on the menu screen to setup item No. A00 (LOAD).

```
SETUP-MENU  MENU
<USER1>    NO.A00 - 0000
 804 BLANK LINE    BLANK
*A00 LOAD          USER2
 A01 SAVE          USER2
 A02 P.ON LOAD       OFF
 END
```

4 While holding down the search button, turn the search dial and select the user file whose contents are to be loaded into USER1.

5 Press the SET button. The following messages appear on the menu screen and counter display.

Menu screen

```
SETUP-MENU LOAD

  USER2 →  USER1 OK?
   YES<PLAY>/NO<STOP>
```

Counter display

```
TCR  00:00:00:00
SETUP LOAD U-2 → U-1
```

The user file number selected in step 4 is displayed in the shaded area.

6 Press the PLAY button. The settings of the user file selected in step 4 are loaded, and the USER1 menu display appears. When the STOP button is pressed, the USER1 menu display appears while the settings remain unchanged.

7 Turn the search dial and move the cursor (∗) on the menu screen to any setup item except No. A00 (LOAD) and No. A01 (SAVE).

8 Press the SET button. The USER1 settings are now stored in the memory.
If the USER1 settings are not going to be stored in the memory, do not press the SET button but press the MENU button.

Saving a user file

1 Press the MENU button.

2 While holding down the STAND BY button, press the REW or FF button, and select USER1.

3 Turn the search dial and move the cursor (*) on the menu screen to setup item No. A01 (SAVE).

```
SETUP-MENU  MENU
<USER1>     NO.A00 - 0000
 804 BLANK LINE     BLANK
 A00 LOAD           USER2
*A01 SAVE           USER2
 A02 P.ON LOAD        OFF
 END
```

4 While holding down the search button, turn the search dial and select the user file into which the USER1 contents are to be saved. User files which have been set to the lock mode are not displayed. When all the user files have been set to the lock mode, the "LOCKED" display appears and the contents cannot be saved.

5 Press the SET button. The following messages appear on the menu screen and counter display.

Menu screen

```
SETUP-MENU SAVE

  USER1 →  USER2 OK?
   YES<PLAY>/NO<STOP>
```

Counter display

```
TCR  00:00:00:00
SETUP SAVE U-1 → U-2
```

The user file number selected in step 4 is displayed in the shaded area.

6 Press the PLAY button. The contents of the USER1 file are saved in the user file which was selected in step 4 and stored in the memory. When the STOP button is pressed, the USER1 menu display appears while the settings remain unchanged.

7 Turn the search dial and move the cursor (*) on the menu screen to any setup item except No. A00 (LOAD) and No. A01 (SAVE).

8 Press the SET button. The USER1 settings are now stored in the memory.
If the USER1 settings are not going to be stored in the memory, do not press the SET button but press the MENU button.

Automatic loading of user file when the power is turned on

When the user file to be loaded is selected in advance using setup menu item No. A02 (P.ON LOAD), it can be automatically loaded into USER1 when the power is turned on.

SYSTEM menu

<SYSTEM>

Item		Setting		Description
No.	Superimposed display	No.	Superimposed display	
00	WFM SEL	0000 0001 0002 0003 0004 0005 0006 0007	CTL TC VIDEO SYNC RF_L RF_R ENV_L ENV_R	This selects the signal to output from the VIDEO OUT 2 connector. 0: The CTL signal is output. 1: The TIME CODE signal is output. 2: The VIDEO OUT signal is output. 3: The SYNC signal is output. 4: The PB L1, L2 ch RF signal is output. 5: The PB R1, R2 ch RF signal is output. 6: The PB L1, L2 ch ENV signal is output. 7: The PB R1, R2 ch ENV signal is output. **<Notes>** 1. The settings can be changed at any time regardless of the setup menu item No. 30 (MENU LOCK) setting. 2. During normal playback, the output signals have levels which are virtually identical to the values given below under a 75Ω termination. CTL: 0.1 to 0.3 Vp-p TC: 0.6 Vp-p VIDEO: 1.0 Vp-p SYNC: 0.25 Vp-p
10	ENCODER SEL	0000 0001	REMOTE LOCAL	This selects whether the video output signal is to be adjusted on the VTR or with the external encoder remote control. 0: Video output signals are adjusted with the external encoder remote control. 1: Video output signals are adjusted on the VTR.
11	SYS SC	0000 ⋮ 0127 ⋮ 0255	–127 ⋮ 0 ⋮ 128	System phase adjustment: Total variable range: ±180° or more –: Advanced +: Delayed **<Note>** If setting operation is performed, the setting value does not return to factory (default) setting.
12	SYS H	0000 ⋮ 0108 ⋮ 0216	–108 ⋮ 0 ⋮ 108	System phase adjustment: 74 ns steps –: Advanced +: Delayed **<Note>** If setting operation is performed, the setting value does not return to factory (default) setting.
13	VIDEO PHASE	0000 ⋮ 0032 ⋮ 0064	–32 ⋮ 0 ⋮ 32	Video phase adjustment: 148 ns steps –: Advanced +: Delayed
14	SCH COARSE	0000 0001 0002 0003	0 90 180 270	SCH phase adjustment: 90° units –: Advanced +: Delayed (The SC phase changes but the H phase does not change.)
15	SCH FINE	0000 ⋮ 0032 ⋮ 0064	–32 ⋮ 0 ⋮ 32	SCH phase adjustment: Total variable range: ±45° or more –: Advanced +: Delayed (The SC phase changes but the H phase does not change.)
16	AV PHASE	0000 ⋮ 0100 ⋮ 0200	–100 ⋮ 0 ⋮ 100	This adjusts the audio output phase with respect to the video output: 20.8 μsec steps –: The audio output phase is advanced with respect to the video output. +: The audio output phase is delayed with respect to the video output.

The underline on the setting item denotes the initial setting.

SYSTEM menu

<SYSTEM> (continued)

Item		Setting		Description
No.	Superimposed display	No.	Superimposed display	
17	SYS H RANGE	0000 0001	FULL FINE	This selects the adjustable range for SYSTEM H during when the ENCODER REMOTE is connected. 0: ±8 µsec 1: –2.0 to +2.7 µsec **<Notes>** • If setting operation is performed, the setting value does not return to factory (default) setting. • FULL operation results regardless of this item's setting if SYSTEM H is varied using this unit instead of the encoder remote controller.
18	SYS H OFFSET	0000 0001 0002 0003 0004 0005 0006	–3 –2 –1 0 1 2 3	System phase adjustment: 0: –13.4 µsec 1: –8.96 µsec 2: –4.52 µsec 3: 0 sec 4: +4.52 µsec 5: +8.96 µsec 6: +13.4 µsec **<Note>** Factory settings will remain unchanged even if an attempt is made to perform a setting operation.
19	SYS SC/H	0000 0001	REMOTE LOCAL	This sets whether the system phase is to be adjusted by the unit or from the external encoder remote controller. 0: The system phase is adjusted from the external encoder remote controller. 1: The system phase is adjusted by the unit. **<Note>** This setting does not take effect when LOCAL has been selected as the SYSTEM menu item No. 10 (ENCODER SEL) setting.
30	MENU LOCK	0000 0001	OFF ON	This selects whether the system file lock mode is to be engaged or released. 0: The lock is released (file data can be changed). 1: The lock is engaged (file data cannot be changed). **<Note>** Setup menu No. 00 (WFM SEL) can be changed at any time regardless of the setting selected for this menu item.

The underline on the setting item denotes the initial setting.

Video output signal adjustments

The video output signal adjustments are made by selecting the SYSTEM menu item No. 10 (ENCODER SEL) and No. 19 (SYS SC/H) settings. A control matrix of the adjustments is shown below.

Setting		Item adjusted		
SYSTEM menu itm 10: ENCODER SEL	SYSTEM menu item 19: SYS SC/H	SYSTEM menu item 11: SYS SC 12: SYS H	SYSTEM menu item 17: SYS H RANGE	VIDEO LEVEL CHROMA LEVEL SET UP HUE
LOCAL	LOCAL	Unit	Always FULL regardless of setting	Unit
	REMOTE			
REMOTE	LOCAL	Unit		External encorder remote controller
	REMOTE	External encoder remote controller	FULL/FINE	

USER menu

<BASIC>

Item		Setting		Description
No.	Superimposed display	No.	Superimposed display	
000	P-ROLL TIME	0000 ⋮ 0005 ⋮ 0015	0S ⋮ 5S ⋮ 15S	This sets the preroll time which can be set from 0 to 15 seconds in 1-second increments. **<Note>** When the unit is set to automatic editing [PREVIEW, AUTO EDIT], the unit will not operate if the preroll time is set to 0 seconds.
001	LOCAL ENA	0000 0001 0002	DIS ST&EJ ENA	This selects the buttons which can be operated on the front panel when the REMOTE/LOCAL switch has been set to REMOTE. 0: No buttons can be operated. 1: Only the STOP and EJECT buttons can be operated. 2: All buttons except for the RECORDER and PLAYER buttons can be operated.
002	TAPE TIMER	0000 0001	±12h 24h	This selects the 12 or 24 hour display for the CTL counter. 0: 12 hour display 1: 24 hour display
003	REMAIN SEL	0000 0001	OFF ON	This selects whether to indicate the remaining tape time (REMAIN) on the front panel display and the superimposed display at the VIDEO OUT 3/SERIAL OUT 3 connectors. 0: Remaining tape time is not displayed. 1: Remaining tape time is displayed. **<Notes>** • The remaining tape time is indicated at the far right of the second line on the front panel display and superimposed display. • Even when 1 (ON) has been selected, the remaining tape time is not displayed while it is being calculated after the cassette has been ejected or inserted. • When TIME has been selected as the setup menu item No. 008 (DISPLAY SEL) setting, the time is not indicated on the superimposed display. • No display appears if the freeze mark (F) is indicated by the setup menu item No. 111 (FRZ MODE SEL) setting. • No display appears if the tape start or end has been detected and BOT or EOT is displayed.
004	SETUP NUMBER	0000 0001	OFF ON	This selects whether the SETUP-MENU user file No. is displayed on-screen. 0: The SETUP-MENU No. is not displayed. 1: The SETUP-MENU No. is displayed.
005	METER SELECT	0000 0001	CUE VIDEO	This selects whether the level meters are to display the CUE track signal level or the video signal level. 0: The CUE track signal levels are displayed. 1: The video signal levels are displayed.
006	SYNCHRO-NIZE	0000 0001	OFF ON	This selects whether or not to synchronize between two VTRs. 0: No synchronization. The editing points deviate several frames, but editing can be started quickly. 1: Synchronization. Allows for error-free editing.
007	SUPER	0000 0001 0002	OFF ON SW	This selects whether the time code and other super display which are output to the VIDEO OUT 3/SERIAL OUT 3 connector is to shown. 0: Not shown. 1: Shown. 2: ON/OFF for the superimposed display is switched each time the PLAY button is pressed while the SET button on the bottom section of the front panel is held down. **<Note>** The regular playback operation is performed if the PLAY button is pressed first.

The underline on the setting item denotes the initial setting.

USER menu

<BASIC> (continued)

Item		Setting		Description
No.	Superimposed display	No.	Superimposed display	
008	DISPLAY SEL	0000 0001 0002 0003 0004 0005 0006	TIME T&STA T&S&M T&RT T&YMD T&MDY T&DMY	This selects what information is to be provided by the time code and other super displays output to the VIDEO OUT 3/ SERIAL OUT 3 connector. 0: Time only. 1: Time and status. 2: Time, status and mode. 3: Time and REC TIME 4: Time and REC DATE (year/month/day) 5: Time and REC DATE (month/day/year) 6: Time and REC DATE (day/month/year) **<Notes>** 1. Displayed as the mode is DVCPRO_50 for the DVCPRO50 (50 Mbps), DVCPRO for the DVCPRO (25 Mbps), DV for the DV or DVCAM for the DVCAM. 2. An error message appears if a warning or error has occurred when 2 (T&S&M) has been selected as this setting. 3. REC TIME and REC DATE are displayed during DV/DVCAM playback only. With the DVCPRO50 (50 Mbps) or DVCPRO (25 Mbps) format, the operating mode is displayed.
009	CHARA H-POS	0000 ⋮ 0004 ⋮ 0015	0 ⋮ 4 ⋮ 15	This sets the position of the characters on the horizontal plane for the time code and other super displays output to the VIDEO OUT 3/SERIAL OUT 3 connector. **<Note>** When setting this item, the DISPLAY SEL status is output to VIDEO OUT 3/SERIAL OUT 3 even if SUPER OFF has been set. However, when the menu is exited, operation complies with the SUPER OFF/ON setting. Also, CHARA TYPE is output to VIDEO OUT 3/SERIAL OUT 3 according to the status set in the menu.
010	CHARA V-POS	525 mode 0000 ⋮ 0018 ⋮ 0022 625 mode 0000 ⋮ 0023 ⋮ 0028	 0 ⋮ 18 ⋮ 22 0 ⋮ 23 ⋮ 28	This sets the position of the characters on the vertical plane for the time code and other super displays output to the VIDEO OUT 3/SERIAL OUT 3 connector. **<Notes>** 1. When setting this item, the DISPLAY SEL status is output to VIDEO OUT 3/SERIAL OUT 3 even if SUPER OFF has been set. However, when the menu is exited, operation complies with the SUPER OFF/ON setting. 2. When the DISPLAY SEL setting causes characters to extend beyond the edges of the screen, the setting value is changed so that the characters are automatically displayed in a position on the screen.
011	CHARA TYPE	0000 0001	WHITE W/OUT	This selects the display type for the super display output to the VIDEO OUT 3/SERIAL OUT 3 connector as well as for displays such as the setting menu, etc. 0: White characters against a black background. 1: White characters with a black border.
012	SYS FORMAT	0000 0001	50M 25M	This sets the VTR's recording and playback format. **<Notes>** The menu have no unfluece on recording and playback format.

The underline on the setting item denotes the initial setting.

USER menu

<BASIC> (continued)

Item		Setting		Description
No.	Superimposed display	No.	Superimposed display	
013	PB FORMAT	0000 0001	MANUAL AUTO	Sets the format in which the tape is to be played back. The menu have no unfluece on recording and playback format
014	FORMAT SEL	0000 0001 0002 0003	DVCPRO DV DVCAM SW	Selects the format to be established with an "L" or "S" size cassette. The menu have to unfluece on recording and playback format.

The underline on the setting item denotes the initial setting.

USER menu

<BASIC> (continued)

Item		Setting		Description
No.	Superimposed display	No.	Superimposed display	
015	MONI CONTROL	0000 0001	MANU AUTO	This sets whether the recorder is to be forcibly set to the EE mode and the player's playback signals are to be output to the monitor by pressing the recorder's PLAYER button when a monitor has been connected only to the recorder during deck-to-deck editing. 0: The recorder is not forcibly set to the EE mode. 1: The recorder is forcibly set to the EE mode, and the player's playback signals are output.
016	CU-ROLL TIME	0000 ⋮ 0015	0s ⋮ 15s	Sets the preroll time using the PREROLL button when the multi-cue function has been set to ON. The time can be set in 1-second increments from 0 to 15 seconds.

The underline on the setting item denotes the initial setting.

Playback Formats

The following setting options are selected using a combination of menu settings (No.'s 012, 013, 014).

013: PB FORMAT	012: SYS FORMAT	014: FORMAT SEL	Playback format		
			L cassette	M cassette	S cassette
MANUAL	50M	DVCPRO	DVCPRO50 (50 Mbps)	DVCPRO50 (50 Mbps)	DV
		DV	DV	DVCPRO50 (50 Mbps)	DV
		DVCAM	DVCAM	DVCPRO50 (50 Mbps)	DVCAM
	25M	DVCPRO	DVCPRO (25 Mbps)	DVCPRO (25 Mbps)	DV
		DV	DV	DVCPRO (25 Mbps)	DV
		DVCAM	DVCAM	DVCPRO (25 Mbps)	DVCAM
AUTO	——	——	DVCPRO50 (50 Mbps)/ DVCPRO (25 Mbps)/ DV/DVCAM Automatic Detection	DVCPRO50 (50 Mbps)/ DVCPRO (25 Mbps) Automatic Detection	DV/DVCAM Automatic Detection

<Notes>

- When a tape is ejected, the VTR's format setting is that selected with setup menu item No. 012 (SYS FORMAT).
- When AUTO has been selected for the setup menu item No. 013 (PB FORMAT) setting, the following formats are established during the format detection process (when a tape is inserted).
  L and M cassettes → Format selected for setup menu item No. 012 (SYS FORMAT).
  S cassettes → DVCAM format when DVCAM is selected for the setup menu item No. 014 (FORMAT SEL) setting; DV format with other settings.

USER menu

<OPERATION>

Item		Setting		Description
No.	Superimposed display	No.	Superimposed display	
100	SEARCH ENA	0000 0001	DIAL KEY	This selects the direct search dial operation. 0: For direct search dial operations. 1: Operation is not transferred to the search mode unless the search button is pressed.
101	SHTL MAX	0000 0001 0002	×8.4 ×16 ×32	This sets the maximum speed for shuttle operations. 0: 8.4 (7.0)× normal speed 1: 16× normal speed 2: 32× normal speed **<Note>** The value for the DV format is shown in parenthesis ( ).
102	FF. REW MAX	0000 0001 0002	×16 ×32 ×50	This sets the maximum speed for FF and REW operations. 0: 16 (32)× normal speed 1: 32 (60)× normal speed 2: 50 (100)× normal speed **<Notes>** • The speeds given in the parentheses apply in the DVCPRO (25 Mbps) mode. • With the DV/DVCAM format, the maximum speed is set to 32× regardless of this item's settings.
103	AUDIO MUTE	0000 0001	OFF ON	This sets the status until the audio signal is output when operation switches from the stop or search modes to the play mode. 0: The time until the audio is output is shortened. 1: The audio is output after the status stabilizes. **<Note>** When set to 0 (OFF), the sound in the initially output part is incomplete. Therefore, this setting is not recommended for broadcasts.
104	REF ALARM	0000 0001	OFF ON	This selects whether to warn the operator when the REF.VIDEO signal has not been connected. 0: Warning is not given. 1: Warning is given by the flashing STOP lamp.
105	AUTO EE SEL	0000 0001 0002 0003 0004 0005	S/F/R STOP BLACK BLACK1 GRAY GRAY1	This selects the VTR mode in which the EE status is established when the TAPE/EE switch is set to EE. 0: EE status is established in the STOP, FF or REW mode. However, EE status is always established in EJECT mode regardless of the TAPE/EE switch setting. 1: EE status is established only in the STOP mode. However, EE status is always established in EJECT mode regardless of the TAPE/EE switch setting. 2: EE status is established only in the STOP mode. However, depending on TAPE/EE switch setting EJECT mode is as follows: At the EE setting; The EE status is established. At the TAPE setting;The picture turns black. The sound is muted. 3: EE status is established in the STOP, FF or REW mode. However, EJECT is set as follows depending on the setting of the TAPE/EE switch. At the EE setting; The EE status is established. At the TAPE setting;The picture turns black. The sound is muted. 4: EE status is established only in the STOP mode. However, EJECT is set as follows depending on the setting of the TAPE/EE switch. At the EE setting; The EE status is established. At the TAPE setting;The picture turns gray. The sound is muted. 5: EE status is established in the STOP, FF or REW mode. However, EJECT is set as follows depending on the setting of the TAPE/EE switch. At the EE setting; The EE status is established. At the TAPE setting;The picture turns gray. The sound is muted.

The underline on the setting item denotes the initial setting.

USER menu

<OPERATION> (continued)

Item		Setting		Description
No.	Superimposed display	No.	Superimposed display	
106	EE MODE SEL	0000 0001	NORMAL THRU	This selects the EE mode output signals. 0: Signals are output with a delay equivalent to the length of internal signal processing. 1: Signals are output directly, without internal processing, and so are output with no delay. **<Note>** When editing mode is selected, SDTI is selected as the video input signal, or INT SG is selected at either VIDEO or AUDIO, the internal operations are forcibly set to NORMAL.
107	PLAY DELAY	0000 ⋮ 0015	0 ⋮ 15	This set the play delay time in frame increments.
108	CAP.LOCK	0000 0001	4F 8F	This selects the CAPSTAN LOCK mode for the 4F and 8F settings of the CF switch. 0: 4F mode 1: 8F mode **<Note>** This setup menu is not displayed in the 525 mode.
109	AUTO REW	0000 0001	OFF ON	This selects whether to rewind the tape automatically to the tape start when the tape end is detected. 0: The tape stops at the tape end. 1: The tape is rewound to the tape start.
110	MEMORY STOP	0000 0001	OFF ON	This selects whether the VTR is to stop automatically when the counter value reaches "0" during a fast forwarding or rewinding operation in the CTL mode. 0: The VTR does not stop. 1: The VTR stops automatically. **<Notes>** 1. The stop mode concerned is either the stop or the still-picture (SHTL STILL) mode depending on the setup menu No. 315 (AFTER CUE-UP) setting. 2. When both the AUTO REW function and MEMORY function have been selected at the same time, the AUTO REW function takes precedence.

The underline on the setting item denotes the initial setting.

Memory stop function

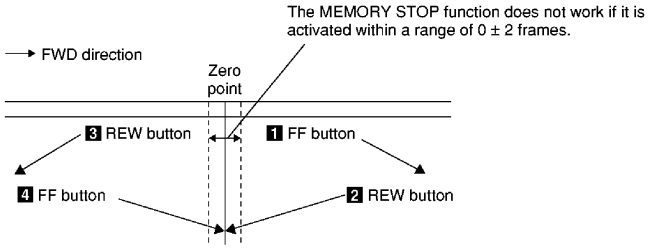

1 When the FF button is pressed, the VTR performs the regular fast forward operation since the zero point is not located in the direction of operation.
2 When the REW button is pressed, the PREROLL lamp lights (the SHTL lamp lights as well), the VTR proceeds with the preroll operation, and it automatically stops when it reaches the position where the counter reads "0."
3 When the REW button is pressed, the VTR performs the regular rewinding operation since the zero point is not located in the direction of operation.
4 When the FF button is pressed, the PREROLL lamp lights (the SHTL lamp lights as well), the VTR proceeds with the preroll operation, and it automatically stops when it reaches the position where the counter reads "0."

<OPERATION> (continued)

Item		Setting		Description
No.	Superimposed display	No.	Superimposed display	
111	FRZ MODE SEL	0000 0001 0002	DIS STBOFF SOF&EJ	This selects the output picture in the STANDBY OFF (HALF LOADING) and EJECT modes. 0: The video output is muted. 1: When the STANDBY OFF (HALF LOADING) mode is established, the picture being played back at the time is frozen and output. 2: When the STANDBY OFF (HALF LOADING) or EJECT mode is established, the picture being played back at the time is frozen and output. **<Notes>** • Freeze status complies with the setup menu item 605 (FREEZE SEL) setting. • In the EJECT mode, freeze is output only when 2 (BLACK), 3 (BLACK1), 4 (GRAY) or 5 (GRAY1) is selected as the setup menu item No. 105 (AUTO EE SEL) setting.
112	V IN SEL INH	0000 0001 0002	OFF ON REC	This selects whether video input switching using the INPUT SELECT switch is to be enabled or disabled. 0: Video input switching using the INPUT SELECT switch is enabled. 1: Video input switching using the INPUT SELECT switch is disabled. 2: Video input switching using the INPUT SELECT switch after the unit has been transferred to a recording (but not editing) mode is disabled. **<Note>** Even when the 1 (ON) or 2 (REC) setting is selected to disable video input switching using the INPUT SELECT switch, it is still possible to set the setup menu item No. 600 (INT SG).
113	A IN SEL INH	0000 0001 0002	OFF ON REC	This selects whether audio input switching using the INPUT SELECT switch is to be enabled or disabled. 0: Audio input switching using the INPUT SELECT switch is enabled. 1: Audio input switching using the INPUT SELECT switch is disabled. 2: Audio input switching using the INPUT SELECT switch after the unit has been transferred to a recording (but not editing) mode is disabled. **<Note>** Even when the 1 (ON) or 2 (REC) setting is selected to disable audio input switching using the INPUT SELECT switch, it is still possible to set the setup menu items No. 700 (INT SG), No. 715 (CH1 IN SEL), No. 716 (CH2 IN SEL), No. 717 (CH3 IN SEL), No. 718 (CH4 IN SEL), No. 719 (D IN SEL12) and No. 720 (D IN SEL34).
114	REC INH LAMP	0000 0001	LIGHT FLASH	This selects whether to cause the REC INHIBIT lamp to flash or light up when the cassette has been set to the accidental erasure prevention status. 0: The lamp lights up. 1: The lamp flashes. **<Note>** When the REC INHIBIT switch is set to ON, the REC INHIBIT lamp always lights regardless of the general setting status.
115	EJECT SW INH	0000 0001	REC OFF	This selects whether to enable or disable the operation of the EJECT button on the front panel. 0: Operation is disabled while the unit is in the recording mode. 1: Operation is enabled in all modes.

The underline on the setting item denotes the initial setting.

<OPERATION> (continued)

Item		Setting		Description
No.	Superimposed display	No.	Superimposed display	
116	EJECT LAMP	0000 0001	MODE1 MODE2	Selects whether the EJECT lamp is to remain lighted or be turned off in the cassette out status. 0: The EJECT lamp remains lighted. 1: The EJECT lamp goes off.
130	MULTI CUE	0000 0001	OFF ON	Selects ON or OFF for the multi-cue function. 0: Multi-cue function OFF 1: Multi-cue function ON **<Notes>** • Editing cannot be performed when ON has been selected as the multi-cue function setting. • When the multi-cue function is set to ON in the editing mode selection status, the editing channel selection buttons are automatically released. • When the multi-cue function has been set to ON, the deck-to-deck facility cannot be used. • When the multi-cue function has been set to ON, the mode cannot be indicated on the front panel counter display.
131	PAGE MODE	0000 0001	MANU AUTO	Selects the cue point registration operation when the multi-cue function has been set to ON. 0: Registration takes place on the selected page, and 8 cue points can be registered. 1: When the page on which cue points are being registered has been filled, registration automatically continues on the next page. A total of 80 cue points can be registered on up to 10 pages.
132	ROTA MODE	0000 0001	OFF ON	Selects the registration operation which is to be performed if all the cue points have already been registered when the multi-cue function has been set to ON. 0: The registration operation is not performed. 1: The registration operation is continued. If "MANU" has been selected as the setup menu No. 131 (PAGE MODE) setting, the cue point is registered in CUE * 1 on the same page; if "AUTO" has been selected, it is registered in CUE01.

The underline on the setting item denotes the initial setting.

USER menu

<INTERFACE>

Item		Setting		Description
No.	Superimposed display	No.	Superimposed display	
200	PARA RUN	0000 0001	DIS ENA	This selects whether two or more VTRs are to be operated in synchronization. 0: No operation in synchronization 1: Operation in synchronization **<Note>** When operating two or more VTRs in synchronization, set all the VTRs to 0001 (ENA).
201	9P SEL	0000 0001	OFF ON	This selects whether the 9P connector functions when the REMOTE/LOCAL switch has been set to REMOTE. 0: Do not function 1: Function
202	ID SEL	0000 0001 0002	OTHER DVCPRO ORIG	This selects the ID information which is returned to the controller. 0: 20 25H = 525 mode; 21 25H = 625 mode 1: The DVCPRO's original ID (F0 33H = 525 mode; F1 33H = 625 mode) is returned. 2: The unit's original ID (A0 44H = 525 mode; A1 44H = 625 mode) is returned. **<Note>** The 2 (ORIG) setting should only be used when a Panasonic controller (AJ-A900 etc. sold separately) is connected.
203	25P SEL	0000 0001	OFF ON	This selects whether the PARALLEL (25P) connector functions when the REMOTE/LOCAL switch has been set to REMOTE. 0: Does not function
204	RS232C SEL	0000 0001	OFF ON	1: Functions These settings are for selecting whether the RS-232C connector is to function when the REMOTE/LOCAL switch is set to REMOTE. 0: Connector does not function. 1: Connector functions.
205	BAUD RATE	0000 0001 0002 0003 0004 0005	300 600 1200 2400 4800 9600	These settings are for selecting the RS-232C communication speed (baud rate).
206	DATA LENGTH	0000 0001	7 8	These settings are for selecting the RS-232C data length. (Unit: bit)
207	STOP BIT	0000 0001	1 2	These settings are for selecting the RS-232C stop bit length. (Unit: bit)
208	PARITY	0000 0001 0002	NON ODD EVEN	These settings are for selecting the none, odd or even for the RS-232C parity bit. 0: Parity bit is not used. 1: An odd number of bits is used for the parity system. 2: An even number of bits is used for the parity system.
209	RETURN ACK	0000 0001	OFF ON	These settings are for selecting whether the ACK code is to be returned when a command is received from RS-232C. 0: ACK code is not returned. 1: ACK code is returned.
210	25P STBY CMD	0000 0001	OFF/ON ON	For selecting the method used to detect the STANDBY COMMAND signal input at the PARALLEL (25P) connector. 0: Each time active signals are detected, the STANDBY ON or STANDBY OFF mode is selected alternately. 1: When active signals are detected in the STANDBY OFF mode, the unit is transferred to the STANDBY ON mode. Nothing happens if they are detected during an operation in the STANDBY ON mode.

The underline on the setting item denotes the initial setting.

<INTERFACE> (continued)

Item		Setting		Description
No.	Superimposed display	No.	Superimposed display	
211	LOCAL 25P	0000	OFF	This selects whether the PARALLEL (25P) connector is to function when the REMOTE/LOCAL switch is at the LOCAL position. 0: The connector does not function. 1: The connector functions.
		0001	ON	
212	MASTER PORT	0000	IN/OUT	For selecting the remote control connector to control the slave when the unit is used as the master during deck-to-deck operations. 0: The IN/OUT connector is used. 1: The OUT connector is used. **<Note>** This menu item takes effect only when the REMOTE/LOCAL switch has been set to the LOCAL position.
		0001	OUT	

The underline on the setting item denotes the initial setting.

USER menu

<EDIT>

Item		Setting		Description
No.	Superimposed display	No.	Superimposed display	
301	IN/OUT DEL	0000 0001	MANU AUTO	This selects the operation to be performed when an edit point has been set incorrectly (when the OUT point is before the IN point). 0: Editing is not executed unless the illegal edit point is cleared or set again properly. 1: The edit points already input are automatically cleared.
302	NEGA FLASH	0000 0001	OFF ON	This selects whether to show a negative display when the IN point is greater than the OUT point. 0: No negative display. 1: Negative display.
303	STD/ NON-STD	0000 0001 0002	AUTO STD N-STD	This selects STD or NON-STD in accordance with the composite input signal. 0: Standard/non-standard signals are automatically identified and processed. 1: Standard signals are processed. (Forced STD) 2: Non-standard signals are processed. (Forced NON-STD) **<Note>** Use the non-standard (N-STD) setting when video or audio trouble occurs with signals from laser discs or a satellite.
304	SERVO REF	0000 0001 0002	AUTO EXT INPUT	This selects the video signal processing. 0: Servo is synchronized with the input signal during recording and editing, or with the REF signal during playback. 1: Servo is synchronized at all times with the REF signal. 2: The servo is synchronized with the input signal at all times.
305	EDIT RPLCE1	0000 0001 0002 0003	N-DEF CH1 CH2 CH1+2	This sets the channel assignments for the controller's analog audio preset when editing the digital audio of the VTR using a controller which does not have a digital audio edit preset control function. This selects the channel concerned when the VTR CH1 edit preset is set in compliance with the ON or OFF presetting for the analog audio signals designated by the controller. 0: Not set. 1: Compliance with analog CH1 edit preset. 2: Compliance with analog CH2 edit preset. 3: Compliance with either analog CH1 or CH2 edit preset.
306	EDIT RPLCE2	0000 0001 0002 0003	N-DEF CH1 CH2 CH1+2	The same type of setting as setup menu No. 305. This selects the channel concerned when the CH2 edit preset is set in compliance with the ON or OFF presetting for the analog audio signals designated by the controller. 0: Not set. 1: Compliance with analog CH1 edit preset. 2: Compliance with analog CH2 edit preset. 3: Compliance with either analog CH1 or CH2 edit preset.
307	EDIT RPLCE3	0000 0001 0002 0003	N-DEF CH1 CH2 CH1+CH2	The same type of setting as setup menu No. 305. This selects the channel concerned when the CH3 edit preset is set in compliance with the ON or OFF presetting for the analog audio signals designated by the controller. 0: Not set. 1: Compliance with analog CH1 edit preset. 2: Compliance with analog CH2 edit preset. 3: Compliance with either analog CH1 or CH2 edit preset.

The underline on the setting item denotes the initial setting.

USER menu

<EDIT> (continued)

Item		Setting		Description
No.	Superimposed display	No.	Superimposed display	
308	EDIT RPLCE4	0000 0001 0002 0003	N-DEF CH1 CH2 CH1+CH2	The same type of setting as setup menu No. 305. This selects the channel concerned when the CH4 edit preset is set in compliance with the ON or OFF presetting for the analog audio signals designated by the controller. 0: Not set. 1: Compliance with analog CH1 edit preset. 2: Compliance with analog CH2 edit preset. 3: Compliance with analog CH1 or CH2 edit preset.
309	EDIT RPLCEC	0000 0001 0002 0003	N-DEF CH1 CH2 CH1+2	The same type of setting as setup menu No. 305. This selects the channel concerned when the CUE edit preset is set in compliance with the ON or OFF presetting for the analog audio signals designated by the editor or controller. 0: Not set. 1: Compliance with analog CH1 edit preset. 2: Compliance with analog CH2 edit preset. 3: Compliance with either analog CH1 or CH2 edit preset.
310	CONFI EDIT	0000 0001	OFF ON	This selects whether to conduct simultaneous playback while editing is in progress. 0: No simultaneous playback 1: Simultaneous playback **<Note>** Simultaneous playback is valid when the TAPE/EE switch is set to TAPE.
311	AUD EDIT IN	0000 0001	CUT FADE	This selects the connection method for the digital audio edit IN point. 0: Cut processing 1: V Fade processing
312	AUD EDIT OUT	0000 0001	CUT FADE	This selects the connection method for the digital audio edit OUT point. 0: Cut processing 1: V Fade processing
313	AUTO ENTRY	0000 0001	DIS ENA	This selects whether the IN point is to be entered using the PREROLL button when it has not been entered. 0: IN point is not entered. 1: IN point is entered.
314	CF ADJ SEL	0000 0001	PLAYER RECORD	This selects the CF adjustment deck with deck-to-deck editing. 0: The player's edit IN/OUT points are adjusted. (reference as the RECORDER side) 1: The recorder's edit IN/OUT points are adjusted. (reference as the PLAYER side)
315	AFTER CUE-UP	0000 0001 0002	STOP STILL STILL2	This selects the mode after cue-up operation is complete. 0: STOP mode 1: SHTL STILL mode 2: VAR STILL mode

The underline on the setting item denotes the initial setting.

<EDIT> (continued)

Item		Setting		Description
No.	Superimposed display	No.	Superimposed display	
317	AUD MEM MODE	0000 0001 0002 0003 0004	OFF AMU_X AMU_VO INT_X INT_VO	Establishes the setting for voice-over and/or audio cross channel editing using the AJ-YA752 audio memory unit or built-in audio memory. 0: Neither voice-over nor audio cross channel editing is performed 1: Audio cross channel editing is performed using the AJ-YA752 audio memory unit. 2: Voice-over editing is performed using the AJ-YA752 audio memory unit. 3: When performing audio cross channel editing using the internal audio memory 4: When performing voice-over editing using the internal audio memory **<Notes>** • The RS-232C interface will not function with the 1 (AMU_X) or 2 (AMU_VO) setting. • When the 2 (AMU_VO) or 4 (INT_VO) setting is selected, the channels selected by the setup menu item No. 318 (AUD MEM CH) setting are output to the monitor with any delay automatically eliminated internally using the CUE system. Consequently, CUE audio no longer functions, and the setup menu item No. 726 (REC CUE) also loses its function since this is now automatically switched internally. Up to 20 seconds of sound from one channel can be stored in the unit's internal memory. It should be borne in mind that even if an attempt is made to store more than 20 seconds of sound in the memory, all the audio signals in excess of the memory's 20-second capacity will fail to be stored. • Refer to the instruction manual of the AJ-YA752 audio memory unit for details on how to use each mode using this unit.
318	AUD MEM CH	0000 0001 0002 0003	CH1 CH2 CH3 CH4	This sets the channel for the voice-over or audio cross channel editing which is performed using the AJ-YA752 audio memory unit. 0: The signals are recorded onto CH1. 1: The signals are recorded onto CH2. 2: The signals are recorded onto CH3. 3: The signals are recorded onto CH4. **<Note>** This setting has no effect when AMU_VO has been selected as the setup menu No. 317 (AUD MEM MODE) setting.
320	VAR FWD MAX	0000 0001 0002	+4.1 +2 +1	This sets the maximum VAR FWD speed. 0: +4.1 (+3.1)× speed 1: +2 (+1.85)× speed 2: +1× speed **<Notes>** • The value for the DV/DVCAM format is shown in parenthesis ( ). • At any speed setting other than 0 (+4.1×), the phase cannot be synchronized from the editing controller.
321	VAR REV MAX	0000 0001 0002	–4.1 –2 –1	This sets the maximum VAR REV speed. 0: –4.1 (–3.1)× speed 1: –2 (–1.85)× speed 2: –1× speed **<Note>** The value for the DV/DVCAM format is shown in parenthesis ( ).

The underline on the setting item denotes the initial setting.

<EDIT> (continued)

Item		Setting		Description
No.	Superimposed display	No.	Superimposed display	
323	JOG FWD MAX	0000 0001 0002	+4.1 +2 +1	This sets the maximum JOG FWD speed. 0: +4.1 (+3.1)× speed 1: +2 (+1.85)× speed 2: +1× speed **<Notes>** • The value for the DV/DVCAM format is shown in parenthesis ( ). • The maximum speed is set to +2 (+1)× when the dial on the front panel is operated. • At any speed setting other than 0 (+4.1×), the phase cannot be synchronized from an editing controller which synchro-nizes the phase using the JOG command.
324	JOG REV MAX	0000 0001 0002	–4.1 –2 –1	This sets the maximum JOG REV speed. 0: –4.1 (–3.1)× speed 1: –2 (–1.85)× speed 2: –1× speed **<Notes>** • The value for the DV/DVCAM format is shown in parenthesis ( ). • When the dial on the front panel is operated, the maximum speed is set to –1 (–1)×.
325	POSTROLL TM	0000 0001 0002 0003 0004 0005	0s 1s 2s 3s 4s 5s	This sets the postroll time. Any time from 0 to 5 seconds can be set in 1-second units.

The underline on the setting item denotes the initial setting.

USER menu

<TAPE PROTECT>

Item		Setting		Description
No.	Superimposed display	No.	Superimposed display	
400	STILL TIMER	0000 0001 0002 0003 0004 0005 0006 0007 0008	0.5s 5s 10s 20s 30s 40s 50s 1min 2min	This selects the time to be taken until the unit goes into the tape protection mode when it is left standing in the stop or search still (JOG/VAR/SHTL) mode. (Unit: s = second, min = minute) **<Notes>** • When a DV/DVCAM tape is used, any setting above 10 seconds will be treated as 10 seconds. However, the selection screen will show operations up to 2 minutes. • STEP FWD and HALF LOADING are provided in the tape protection mode. Either of these can be set for STOP and SEARCH STILL.
401	SRC PROTECT	0000 0001	STEP HALF	When the time selected as the setup menu item No. 400 (STILL TIMER) setting elapses while the unit is in the search STILL (JOG/VAR/SHTL) mode, the unit automatically enters one of the tape protection modes. This menu item is for selecting which tape protection mode the unit is to enter. 0: STEP FWD. 1: HALF LOADING. **<Note>** When STEP FWD is selected, the unit automatically goes into the STANDBY OFF (HALF LOADING) mode when the total time for which the unit is left standing in the still status reaches 30 minutes (or 1 minute for a DV/DVCAM tape).
402	DRUM STDBY	0000 0001	OFF ON	This selects the drum operation in the STANDBY OFF (HALF LOADING) mode. 0: The drum stops rotating. 1: The drum continues rotating.
403	STOP PROTECT	0000 0001	STEP HALF	When the time selected as the setup menu item No. 400 (STILL TIMER) setting elapses while the unit is in the STOP mode, the unit automatically enters one of the tape protection modes. This menu item is for selecting which tape protection mode the unit is to enter. 0: STEP FWD 1: HALF LOADING **<Note>** When STEP FWD is selected, the unit is automatically transferred to the STANDBY OFF (HALF LOADING) mode when the total time during which it has been left standing in the STOP mode reaches 30 minutes (or 1 minute for a DV/DVCAM tape).

The underline on the setting item denotes the initial setting.

<Note>
The cumulative standby time at the same tape position increases when transmitting programs or otherwise using identical materials repeatedly.

USER menu

<TIME CODE>

Item		Setting		Description
No.	Superimposed display	No.	Superimposed display	
500	VITC BLANK	0000 0001	BLANK THRU	For selecting whether to output the VITC signal at the positions selected by setup menu items No. 501 (VITC POS-1) and No. 502 (VITC POS-2). 0: VITC signals are not output. 1: VITC signals are output.
501	VITC POS-1	525 mode 0000 ⋮ 0006 ⋮ 0010 625 mode 0000 ⋮ 0004 ⋮ 0015	 10L ⋮ 16L ⋮ 20L 7L ⋮ 11L ⋮ 22L	This sets the position where the VITC signal is to be inserted. **<Note>** The same line as the one used for the setup menu item No. 502 (VITC POS-2) setting cannot be set.
502	VITC POS-2	525 mode 0000 ⋮ 0008 ⋮ 0010 625 mode 0000 ⋮ 0006 ⋮ 0015	 10L ⋮ 18L ⋮ 20L 7L ⋮ 13L ⋮ 22L	This sets the position where the VITC signal is to be inserted. **<Note>** The same line as the one used for the setup menu item No. 501 (VITC POS-1) setting cannot be set.
503	TCG REGEN	0000 0001 0002	TC&UB TC UB	This selects the signal to be regenerated when the time code generator (TCG) in the REGEN mode. 0: Both the time code and user bit are regenerated. 1: Only the time code is regenerated. 2: Only the user bit is regenerated.
504	REGEN MODE	0000 0001 0002 0003	AS&IN ASSEM INSRT SW	This selects whether the time code is to be regenerated during automatic editing using the unit's control panel. 0: Time code is regenerated with assemble or insert editing. 1: Time code is regenerated with assemble editing. 2: Time code is regenerated with insert editing. 3: Setting complies with REGEN/PRESET switch setting.
505	EXT TC SEL	0000 0001	LTC VITC	This selects the time code to be used when an external time code is to be used. 0: The LTC of the TIME CODE IN connector is used. 1: The video signal VITC is used.
506	BINARY GP	0000 0001 0002 0003 0004 0005 0006 0007	000 001 010 011 100 101 110 111	This sets the usage status of the user bit of the time code generated by the TCG. 0: NOT SPECIFIED (character set not specified) 1: ISO CHARACTER (8 bits character set based on ISO646, ISO2022) 2: UNASSIGNED 1 (undefined) 3: UNASSIGNED 2 (undefined) 4: UNASSIGNED 3 (undefined) 5: PAGE/LINE 6: UNASSIGNED 4 (undefined) 7: UNASSIGNED 5 (undefined)

The underline on the setting item denotes the initial setting.

<TIME CODE> (continued)

Item		Setting		Description
No.	Superimposed display	No.	Superimposed display	
507	PHASE CORR	0000 0001	OFF ON	This selects whether to control the phase correction of the LTC generated by the TCG. 0: Phase correction control is not performed. 1: Phase correction control is performed.
508	TCG CF FLAG	0000 0001	OFF ON	This selects whether the CF flag of the TCG is to ON. 0: CF flag is OFF. 1: CF flag is ON.
509	DF MODE	0000 0001	DF NDF	This selects the DF/NDF mode for CTL and TCG. 0: Drop frame mode. 1: Non-drop frame mode. **<Notes>** • DF mode is valid only when the LOCAL/REMOTE switch is set to LOCAL or the setup menu No. 001 (LOCAL ENA) is set to ENA. • This setup menu is not displayed in the 625 mode.
510	TC OUT REF	0000 0001	V OUT TC IN	This is used to switch the phase of the time code, which is output from the TIME CODE OUT connector, for the external LTC input when the TC INT/EXT switch is at the EXT position. 0: Time code is synchronized with output video signal. 1: Time code is synchronized with external time code input.
511	VITC OUT	0000 0001	SBC VAUX	This selects how the VITC which is to be superimposed onto the output video signal is to be output. 0: During recording: The input time code, which was selected by the setup menu No. 505 (EXT TC SEL) setting and TC INT/EXT switch, is output as the VITC. During playback: The time code recorded in the SBC area is output as the VITC. 1: During recording: The time code detected from the input video signal is output as the VITC. During playback: The time code recorded in the VAUX area is output as the VITC. **<Note>** The time code detected from the input video signal is automatically recorded in the VAUX area while pictures are being recorded.

The underline on the setting item denotes the initial setting.

SBC (sub code data) area:
This area is separate from the video and audio data area on the helical track. The time code complying with SMPTE/EBU standards is stored here. As with the conventional LTC (linear time code), the time code can be read even during rewinding or fast forwarding. It can also be read out when the tape has stopped.

VAUX (video auxiliary data) area:
This area is to be found in the video data area on the helical track. The additional information relating to the video data is stored here.

<Note>
The time code and user's bit are controlled during tape playback by the data which has been recorded in the SBC area. This means that all the data recorded in the SBC area alone is used as the data which is to be indicated on the counter display section in the middle of the front panel or in the superimposed display, or as the data which is to be transmitted to the editing controller or other unit.

USER menu

<VIDEO>

Item		Setting		Description
No.	Superimposed display	No.	Superimposed display	
600	INT SG	0000 0001 0002	OFF BB CB	This selects whether to generate the internal signal. 0: Signal is not generated. 1: The black burst is generated. 2: 100% color bars are generated.
601	OUT VSYNC	0000 0001	N-VF VF	This selects whether to float the vertical sync position of the video output in order to align the video output phase with the input in the EE/record/edit modes. 0: Signals are not floated. 1: Signals are floated.
602	V-MUTE SEL	0000 0001	N-MUTE LOW RF	Selects whether to mute the video output signals when a blank on the tape has been detected during playback. 0: No muting. (Freeze) 1: Muting. (Set to gray.)
603	CC (F1) BLANK	0000 0001	BLANK THRU	This selects ON or OFF for the closed caption signal in the first field. 0: Forced blanking performed. 1: Blanking not performed. **<Note>** This setup menu is not displayed in the 625 mode.
604	CC (F2) BLANK	0000 0001	BLANK THRU	This selects ON or OFF for the closed caption signal in the second field. 0: Forced blanking performed. 1: Blanking not performed. **<Note>** This setup menu is not displayed in the 625 mode.
605	FREEZE SEL	0000 0001	FIELD FRAME	This selects the freeze mode for still pictures. 0: Field freeze. 1: Frame freeze. **<Note>** When frame freeze has been selected, the frame slow status is established with the slow setting.
606	OUT C KILL	0000 0001	B/W COLOR	This selects chroma color killer processing for the video output signals. 0: The signals are forcibly processed as B/W signals. 1: The signals are automatically processed.
609	EDH	0000 0001	OFF ON	This selects whether to superimpose EDH onto the serial output signals. 0: EDH is not superimposed. 1: EDH is superimposed.
610	Pb/Pr IN LV	0000 0001	MII B-CAM	This selects the component input signal level. 0: MII level. 1: ß cam level. **<Note>** This setup menu is not displayed in the 625 mode.
611	INPUT C KILL	0000 0001	B/W AUTO	This selects color killer processing for the video input signals. 0: The signals are forcibly processed as B/W signals. 1: The signals are automatically processed.
614	Pb/Pr OUT LV	0000 0001	MII B-CAM	This selects the analog component output level. 0: MII level 1: ß-CAM level **<Note>** This setup menu is not displayed in the 625 mode.

The underline on the setting item denotes the initial setting.

<Note>
When no optional board (AJ-YA955 or AJ-YA958) has been installed, setup menus No. 610 and 611 are not displayed.

USER menu

<VIDEO> (continued)

Item		Setting		Description
No.	Superimposed display	No.	Superimposed display	
618	INTERPOLATE	0000 0001	OFF AUTO	Vertical interpolation is conducted automatically during slow-motion playback to reduce the vertical movement of the playback pictures. However, this menu item enables the interpolation operation to be forcibly turned off. 0: Interpolation is forcibly turned off. 1: Interpolation is automatically turned on during slow-motion playback.
620	ESR MODE	0000 0001	OFF AUTO	This selects the operation mode for edge subcarrier reduction (ESR) in the playback circuit. 0: The mode is forcibly set to OFF. 1: The mode is automatically set to ON or OFF depending on the VTR operation.
621	CCR MODE	0000 0001	OFF ON	This selects the cross color processing during playback. 0: The cross color is output with no changes made. 1: The cross color can be reduced. **<Note>** This setup menu is not displayed in the 625 mode.
622	SETUP 25			This selects the setup level for each input/output signal in the DVCPRO (25 Mbps) mode. When the STOP button is pressed, operation is transferred to the sub-screen, and the setup level is set for each output. To return from the sub-screen, press the STOP button again. **<Note>** This setup menu item is not displayed in the 625 mode.
Sub-screen				
00	CMPST IN	0000 0001	THRU CUT	This selects the way in which composite input signals are to be recorded. 0: The input signals are recorded in their original form. 1: The input signals are recorded with the 7.5% setup removed.
01	CMPST OUT	0000 0001	THRU ADD	This selects the composite output signals. 0: The signals are output with no setup added. 1: The signals are output with the 7.5% setup added. **<Note>** Bear in mind the setting for sub-screen item No. 03 (CMPNT OUT) of setup menu item No. 622 (SETUP 25).
02	CMPNT IN	0000 0001	THRU CUT	This selects the way in which component input signals are to be recorded. 0: The input signals are recorded in their original form. 1: The input singals are recorded with the 7.5% setup removed.
03	CMPNT OUT	0000 0001	THRU CUT	This selects the way in which the composite, component and serial (digital) signals are to be output. 0: The signals are output in their original form. 1: The signals are output with the 7.5% setup removed.
623	SETUP 50			This selects the setup level for each input/output signal in the DVCPRO (50 Mbps) mode. When the STOP button is pressed, operation is transferred to the sub-screen, and the setup level is set for each output. To return from the sub-screen, press the STOP button again. **<Note>** This setup menu item is not displayed in the 625 mode.

The underline on the setting item denotes the initial setting.

Item		Setting		Description
No.	Superimposed display	No.	Superimposed display	
Sub-screen				
00	CMPST IN	0000 0001	THRU CUT	This selects the way in which the composite input signals are to be recorded. 0: The input signals are recorded in their original form. 1: The input signals are recorded with the 7.5% setup removed.
01	CMPST OUT	0000 0001	THRU ADD	This selects the composite output signals. 0: The signals are output with no setup added. 1: The signals are output with the 7.5% setup added. **<Note>** Bear in mind the setting for sub-screen item No. 03 (CMPNT OUT) of setup menu item No. 623 (SETUP 50).
02	CMPNT IN	0000 0001	THRU CUT	This selects the way in which component input signals are to be recorded. 0: The input signals are recorded in their original form. 1: The input singals are recorded with the 7.5% setup removed.
03	CMPNT OUT	0000 0001	THRU CUT	This selects the way in which the composite, component and serial (digital) signals are to be output. 0: The signals are output in their original form. 1: The signals are output with the 7.5% setup removed.
640	SDI INDEX O	0000 0001	OFF ON	This selects the operation to the video index (CF and WIDE) for the serial output. 0: The video index is not added to serial output signal. 1: CF and WIDE information is added to the serial output signal as the video index.
650	SER IN MODE	0000 0001	MANU AUTO	For selecting the serial input mode. 0: The same mode is selected as the input mode selected on the front panel. 1: The SDI signal or SDTI signal is automatically selected in accordance with the serial input signal. The input display on the front panel is automatically switched in accordance with the input signal.
652	SER OUT1 SEL	0000 0001 0002	SDI SDTI AUTO	For selecting the signal to be output to serial output 1. 0: The SDI signal is output. 1: The SDTI signal is output. 2: The SDTI signal is output during DVCPRO50 or DVCPRO recording (including EE) and playback. The SDI signal is output during DV or DVCAM playback.
653	SDTI MODE	0000 0001	1X_R 2X_P	This selects the VTR operation and SDTI input/output operation when a DVCPRO50 or DVCPRO tape has been inserted. 0: Normal mode is set. Recording, playback and SDTI input/output can be performed at 1× speed. 1: 2× transmission mode is set. Playback and SDTI output can be performed at 2× speed. **<Notes>** • This setup menu's setting takes effect only when "SDTI" or "AUTO" has been selected as the setup menu No. 652 (SER OUT1 SEL) setting. If "SDI" has been selected, the tape will be recorded and played back at the 1× speed regardless of this setup menu's setting. • When a DV or DVCAM tape has been inserted, it is played back at the 1× speed regardless of this setup menu's setting.
654	SDTI IN SEL	0000 0001	V&A V	This selects the way in which SDTI signal input is to be processed when the INPUT SELECT switch for video input has been set to SDTI. 0: SDTI input for both video and audio. 1: SDTI input for video only. Either ANALOG or AES/EBU can be selected for audio.
660	FT MONI SEL	0000 0001 0002 0003	CH1 CH2 CH3 CH4	This selects the monitor channel in SDTI (x2, x4) mode 0: CH1 1: CH2 2: CH3 (x4 speed), CH1 (x2 speed) 3: CH4 (x4 speed), CH2 (x2 speed) This item is effective in the following conndiction. • Dip SW4= ON (Service Front Panel)

The underline on the setting item denotes the initial setting.

<Note>
If the optional SDTI interface board (model AJ-YAC960P) has not been installed, setup menus No. 650, 652 – 654 will not be displayed.

USER menu

<AUDIO>

Item		Setting		Description
No.	Superimposed display	No.	Superimposed display	
700	INT SG	0000 0001	OFF ON	This selects whether or not the internal signal is to be generated. 0: The signal is not generated. 1: The signal is generated.
701	CH1 IN LV	0000 0001 0002	4dB 0dB –20dB	This selects the audio input (CH1) reference level switching.
702	CH2 IN LV	0000 0001 0002	4dB 0dB –20dB	This selects the audio input (CH2) reference level switching.
703	CH3 IN LV	0000 0001 0002	4dB 0dB –20dB	This selects the audio input (CH3) reference level switching.
704	CH4 IN LV	0000 0001 0002	4dB 0dB –20dB	This selects the audio input (CH4) reference level switching.
705	CUE IN LV	0000 0001 0002 0003	4dB 0dB –20dB –60dB	This selects the CUE input reference level switching.
706	CH1 OUT LV	0000 0001 0002	4dB 0dB –20dB	This selects the audio output (CH1) reference level switching.
707	CH2 OUT LV	0000 0001 0002	4dB 0dB –20dB	This selects the audio output (CH2) reference level switching.
708	CH3 OUT LV	0000 0001 0002	4dB 0dB –20dB	This selects the audio output (CH3) reference level switching.
709	CH4 OUT LV	0000 0001 0002	4dB 0dB –20dB	This selects the audio output (CH4) reference level switching.
710	CUE OUT LV	0000 0001 0002	4dB 0dB –20dB	This selects the CUE output reference level switching.
711	MONIL OUT LV	0000 0001 0002	4dB 0dB –20dB	This selects the audio monitor output (Lch) reference level switching.
712	MONIR OUT LV	0000 0001 0002	4dB 0dB –20dB	This selects the audio monitor output (Rch) reference level switching.
713	MONI OUT	0000 0001	UNITY VAR	This selects the audio monitor output volume UNITY/VARIABLE reference switching. 0: The volume is output at the preset value. 1: The volume is linked with the headphones volume control.
714	EMPHASIS	0000 0001	OFF ON	This sets the emphasis ON or OFF.
715	CH1 IN SEL	0000 0001	ANA DIGI	This selects the CH1 input when USER SET has been selected by pressing the unit's AUDIO input selector switch. 0: Analog input. 1: Digital input.

The underline on the setting item denotes the initial setting.

USER menu

<AUDIO> (continued)

Item		Setting		Description
No.	Superimposed display	No.	Superimposed display	
716	CH2 IN SEL	0000 0001	ANA DIGI	This selects the CH2 input when USER SET has been selected by pressing the unit's AUDIO input selector switch. 0: Analog input. 1: Digital input.
717	CH3 IN SEL	0000 0001	ANA DIGI	This selects the CH3 input when USER SET has been selected with the unit's AUDIO input selector switch. 0: Analog input 1: Digital input
718	CH4 IN SEL	0000 0001	ANA DIGI	This selects the CH4 input when USER SET has been selected by pressing the unit's AUDIO input selector switch. 0: Analog input 1: Digital input
719	D IN SEL12	0000 0001	AES SIF	This selects the CH1 and CH2 digital input when USER SET has been selected by pressing the unit's AUDIO input selector switch. 0: AES input 1: Serial input
720	D IN SEL34	0000 0001	AES SIF	This selects the CH3 and CH4 digital input when USER SET has been selected by pressing the unit's AUDIO input selector switch. 0: AES input 1: Serial input
721	MONI CH SEL	0000 0001 0002 0003 0004	MANU AUTO1 AUTO2 AUTO11 AUTO21	This selects the monitor output. 0: The output is as selected in MONITOR SELECT. 1: The cue signal is automatically output in all tape modes except that PCM AUDIO is output over the –1 to +2 range. 2: The cue signal is automatically output in all tape modes except in the play mode in which PCM AUDIO is output. 3: The cue input signal is automatically output when the unit is in the EE mode in addition to AUTO1. 4: The cue input signal is automatically output when the unit is in the EE mode in addition to AUTO2. **<Note>** This setup menu's setting takes effect when CH1, CH2, CH3 or CH4 has been selected by the L and R MONITOR SELECT switches on the front panel. (If CUE has been selected, the cue signal will be output at all the speeds regardless of the setup menu's setting.)
722	REC CH1	0000 0001 0002	CH1 CH2 CH1+2	This selects the input signal to be recorded on the audio CH1 track. 0: Audio input CH1 signal. 1: Audio input CH2 signal. 2: Mixed audio input CH1 and CH2 signal.
723	REC CH2	0000 0001 0002	CH1 CH2 CH1+2	This selects the input signal to be recorded on the audio CH2 track. 0: Audio input CH1 signal. 1: Audio input CH2 signal. 2: Mixed audio input CH1 and CH2 signal.
724	REC CH3	0000 0001 0002	CH3 CH4 CH3+CH4	This selects the input signal to be recorded on the audio CH3 track. 0: Audio input CH3 signal 1: Audio input CH4 signal 2: Mixed audio input CH3 and CH4 signal
725	REC CH4	0000 0001 0002	CH3 CH4 CH3+CH4	This selects the input signal to be recorded on the audio CH4 track. 0: Audio input CH3 signal 1: Audio input CH4 signal 2: Mixed audio input CH3 and CH4 signal

The underline on the setting item denotes the initial setting.

<AUDIO> (continued)

Item		Setting		Description
No.	Superimposed display	No.	Superimposed display	
726	REC CUE	0000 0001 0002 0003 0004 0005 0006 0007	CUE CH1 CH2 CH1+2 CH3 CH4 CH3+4 CH1–4	This selects the input signal recorded in CUE. 0: CUE IN 1: Audio CH1 input 2: Audio CH2 input 3: Audio CH1 and CH2 MIX signal 4: Audio CH3 input 5: Audio CH4 input 6: Audio CH3 and CH4 MIX signal 7: Audio CH1, CH2, CH3 and CH4 mixed signals **<Note>** The input signal is fixed at cue at all times regardless of this setup menu's setting if "SDTI" has been selected by the INPUT SELECT switch.
727	PB FADE	0000 0001 0002	AUTO CUT FADE	This selects the processing method for the audio edit points (IN point, OUT point) during playback. 0: According to the status during recording. 1: Forced CUT 2: Forced FADE
728	EMBEDDED AUD	0000 0001	OFF ON	This selects whether to superimpose the audio data onto the serial output. 0: Data is not superimposed. 1: Data is superimposed.
729	MONITOR MIX L	0000 0001 0002 0003 0004	OFF CH1+2 CH3+4 CH1+3 CH2+4	This makes it possible to select mixed signals for the monitor output. 0: No mixing. 1: CH1 and CH2 are mixed and output to the left channel. 2: CH3 and CH4 are mixed and output to the left channel. 3: The CH1 and CH3 signals are mixed and output to the left channel. 4: The CH2 and CH4 signals are mixed and output to the left channel.
730	MONITOR MIX R	0000 0001 0002 0003 0004	OFF CH1+2 CH3+4 CH1+3 CH2+4	This makes it possible to select mixed signals for the monitor output. 0: No mixing. 1: CH1 and CH2 are mixed and output to the right channel. 2: CH3 and CH4 are mixed and output to the right channel. 3: The CH1 and CH3 signals are mixed and output to the right channel. 4: The CH2 and CH4 signals are mixed and output to the right channel.
731	CUE OUT SEL	0000 0001	OFF ON	This selects whether or not the cue signal is to be output to the main line output in the search mode. 0: CUE is not output. 1: CUE is output. [This applies only when setup menu No. 721 (MONI CH SEL) is not set to "MANU".] **<Notes>** 1. This function works only when a setting other than MANU has been selected by setup menu item No. 721 (MONI CH SEL). 2. The main signal system output channels used for the CUE output differ depending on the setting selected by setup menu item No. 735 (MON AUTO SEL). When L/R is selected: CUE is output to CH1 to CH4. When L is selected: CUE is output to CH1 and CH3. When R is selected: CUE is output to CH2 and CH4.
732	CUE SLOW	0000 0001	STEP LINEAR	For selecting the tape travel status (cue track playback status) during slow-motion playback. 0: The output picture takes precedence, and the tape travels at the STEP speed. 1: The cue track playback takes precedence and the tape travels at the linear playback speed. **<Notes>** When "1" (LINEAR) has been selected: • Set the TC/CTL switch to the TC position because the CTL counter may not function properly. • The picture may not appear as clearly as in the STEP mode.

The underline on the setting item denotes the initial setting.

USER menu <AUDIO> (continued)

Item		Setting		Description
No.	Superimposed display	No.	Superimposed display	
733	CUE OUT	0000 0001	NORMAL DIRECT	For selecting the output from the CUE OUT connector. 0: The timing is aligned with the output picture. 1: Whatever has been recorded on the tape is output with no delay. **<Note>** When "1" (DIRECT) has been selected, the timing of the output picture and that of the cue output are not aligned properly. However, this setting is effective only during DVCPRO (25 Mbps) playback.
734	MONI SEL INH	0000 0001 0002	OFF ON ON1	This selects whether the operation of the MONITOR SELECT button on the front panel is to be enabled or disabled. 0: Operation is enabled. 1: Operation is disabled. 2: Operation is disabled in the FULL display mode and enabled only in the FINE display mode.
735	MON AUTO SEL	0000 0001 0002	L/R L R	Although CUE is automatically output to the monitor output in accordance with the operation mode when a setting other than MANU has been selected by setup menu item No. 721 (MONI CH SEL), the MON AUTO SEL setup menu item is used to select the monitor channel which is to be automatically switched to CUE. 0: CUE is output to both the left and right channels. 1: CUE is output to the left channel only. 2: CUE is output to the right channel only.
736	AUDIO PB VR	0000 0001	DIS ENA	This selects whether the playback level controls are to function in the EE mode when INT SG has been selected as the setup menu item No. 700 (INT SG) setting. 0: The INT SG output level is fixed at UNITY. 1: The INT SG output level can be varied using the playback level controls.
737	JOG PROC	0000 0001	OFF ON	Selects the digital audio output slow signal processing in the JOG/VAR/SHTL mode. 0: The sound from the digital audio without the slow signal processing is output even in the STILL mode. 1: The sound from the digital audio after the slow signal processing is output.
750	DV PB ATT	0000 0001	OFF ON	This selects the audio output level during DV playback. 0: The audio output level is not attenuated. 1: The audio output level is attenuated (reduced).
751	REC PT MUTE	0000 0001	OFF ON	This selects whether to mute the sound where recordings are joined during DV/DVCAM playback. 0: The sound is not muted. 1: The sound is muted.

The underline on the setting item denotes the initial setting.

<Concerning the CUE output in the search mode>

The table below shows how the CUE output to the monitor and main signal system outputs differs according to how the setup menu item (No. 721, No. 731 and No. 735) settings are combined.

731 CUE OUT SEL	721 MONI CH SEL	735 MON AUTO SEL	Monitor output		Main signal system output			
			Lch	Rch	CH1	CH2	CH3	CH4
OFF	MANU	L/R	PCM	PCM	PCM	PCM	PCM	PCM
		L						
		R						
	AUTO1	L/R	CUE	CUE				
	|	L	CUE	PCM				
	AUTO21	R	PCM	CUE				
ON	MANU	L/R	PCM	PCM	PCM	PCM	PCM	PCM
		L						
		R						
	AUTO1	L/R	CUE	CUE	CUE	CUE	CUE	CUE
	|	L	CUE	PCM	CUE	PCM	CUE	PCM
	AUTO21	R	PCM	CUE	PCM	CUE	PCM	CUE

<Notes>

- PCM audio signal output is muted when the VTR is played outside the –1 to +2.0 normal speed.
- When either AUTO1 or AUTO11 is selected, the PCM audio signal is output within –1 to +2.0 normal speed even in the automatic CUE output mode.

USER menu <AUDIO> (continued)

Item		Setting		Description
No.	Superimposed display	No.	Superimposed display	
760	A IN SEL12	0000 0001 0002 0003	CH12 CH34 MIC CH	This selects the input analog signal recorded in CH1 and CH2. 0: Audio CH1, CH2 input signal recorded in CH1 and CH2. 1: Audio CH3, CH4 input signal recorded in CH1 and CH2. 3: Front MIC signal recorded in CH1 and CH2. 4: Intenal CD-drive input signal recorded in CH1 and CH2. (Internal CD-drive input is optional function) **<Note>** This item is effective in the following conndiction. •Select the USER setting (Insert CH3, CH4 keys are OFF) •Set the user menu No.715 (CH1 IN SEL) = ANA No.716 (CH2 IN SEL) = ANA
761	A IN SEL34	0000 0001 0002 0003	CH12 CH34 MIC CD	This selects the input analog signal recorded in CH3 and CH4. 0: Audio CH1, CH2 input signal recoded in CH3 and CH4. 1: Audio CH3, CH4 input signal recoded in CH3 and CH4. 3: Front MIC signal recorded in CH3 and CH4. 4: Intenal CD-drive input signal recorded in CH1 and CH2. (Internal CD-drive input is optional function) **<Note>** This item is effective in the following conndiction. •Select the USER setting (Insert CH3, CH4 keys are OFF) •Set the user menu No.717 (CH3 IN SEL) = ANA No.718 (CH4 IN SEL) = ANA
762	MIC IN	0000 0001	UNITY VAR	This selects either UNITY or VARIABLE for the MIC input level setting. 0: Unity (Fix value) 1: MIC VR
763	MIC EMP	0000 0001	OFF ON	Not supported

USER menu

<V BLANK>

Item		Setting		Description
No.	Superimposed display	No.	Superimposed display	
800	ADD LINE 25	0000 0001 0002 0003 0004 0005 0006 0007 0008	OFF YC422 YC411 Y1_B/W Y1_BPF C1 Y2_B/W Y2_BPF C2	For selecting the mode for recording signals on additional lines. 0: No signals are recorded on additional lines. 1: The 422 mode signals are recorded on 1 line. 2: The 411 mode signals are recorded on 1 line. 3: Only the Y signal is recorded on 1 line directly. 4: Only the Y signal is recorded on 1 line after it has been separated from the C signal. 5: Only the C signal is recorded on 1 line. 6: Only the Y signal is recorded on 2 lines directly. 7: Only the Y signal is recorded on 2 lines after it has been separated from the C signal. 8: Only the C signal is recorded on 2 lines. **<Notes>** • When a setting from "1" to "8" is selected and the STOP button is pressed, operation transfers to the sub-screen, and the recording line or lines can be selected. To return from the sub-screen, press the STOP button again. • The setting takes effect when the system format is 25 Mbps.
Sub-screen (525 mode)				
00	REC LINE1	0000 ⋮ 0012 0013 0014 ⋮ 0025 0026	10L ⋮ 22L 263L 273L ⋮ 284L 525L	For selecting the additional line where the signals are to be recorded.
01	REC LINE2	0000 ⋮ 0012 0013 0014 ⋮ 0016 ⋮ 0025 0026	10L ⋮ 22L 263L 273L ⋮ 275L ⋮ 284L 525L	For selecting the additional line where the signals are to be recorded. **<Note>** This menu item is not displayed when additional line mode setting "1" through "5" has been selected.
Sub-screen (625 mode)				
00	REC LINE1	0000 ⋮ 0015 0016 ⋮ 0031 0032	7L ⋮ 22L 320L ⋮ 335L 623L	For selecting the additional line where the signals are to be recorded.
01	REC LINE2	0000 ⋮ 0015 0016 ⋮ 0018 ⋮ 0031 0032	7L ⋮ 22L 320L ⋮ 322L ⋮ 335L 623L	For selecting the additional line where the signals are to be recorded. **<Note>** This menu item is not displayed when additional line mode setting "1" through "5" has been selected.

The underline on the setting item denotes the initial setting.

<V BLANK> (continued)

Item		Setting		Description
No.	Superimposed display	No.	Superimposed display	
801	ADD LINE 50	0000 0001 0002 0003 0004	OFF YC422 Y4_B/W Y4_BPF C4	For selecting the mode for recording signals on additional lines. 0: No signals are recorded on additional lines. 1: The 422 mode signals are recorded on 2 lines. 2: Only the Y signal is recorded on 4 lines directly. 3: Only the Y signal is recorded on 4 lines after it has been separated from the C signal. 4: Only the C signal is recorded on 4 lines. **<Notes>** • When a setting from "1" to "4" is selected and the STOP button is pressed, operation transfers to the sub-screen, and the recording lines can be selected. To return from the sub-screen, press the STOP button again. • The setting takes effect when the system format is 50 Mbps.
Sub-screen (525 mode)				
00	REC LINE1	0000 ⋮ 0012 0013 0014 ⋮ 0025 0026	10L ⋮ 22L 263L 273L ⋮ 284L 525L	For selecting the additional line where the signals are to be recorded.
01	REC LINE2	0000 ⋮ 0012 0013 0014 ⋮ 0016 ⋮ 0025 0026	10L ⋮ 22L 263L 273L ⋮ 275L ⋮ 284L 525L	For selecting the additional line where the signals are to be recorded.
02	REC LINE3	0000 ⋮ 0003 ⋮ 0012 0013 0014 ⋮ 0025 0026	10L ⋮ 13L ⋮ 22L 263L 273L ⋮ 284L 525L	For selecting the additional line where the signals are to be recorded. **<Note>** This menu item is not displayed when setting "1" has been selected as the additional line mode.
03	REC LINE4	0000 ⋮ 0012 0013 0014 ⋮ 0017 ⋮ 0025 0026	10L ⋮ 22L 263L 273L ⋮ 276L ⋮ 284L 525L	For selecting the additional line where the signals are to be recorded. **<Note>** This menu item is not displayed when setting "1" has been selected as the additional line mode.

The underline on the setting item denotes the initial setting.

<V BLANK> (continued)

Item		Setting		Description
No.	Superimposed display	No.	Superimposed display	
Sub-screen (625 mode)				
00	REC LINE1	0000 ⋮ 0015 0016 ⋮ 0031 0032	7L ⋮ 22L 320L ⋮ 335L 623L	For selecting the additional line where the signals are to be recorded.
01	REC LINE2	0000 ⋮ 0015 0016 ⋮ 0018 ⋮ 0031 0032	7L ⋮ 22L 320L ⋮ 322L ⋮ 335L 623L	For selecting the additional line where the signals are to be recorded.
02	REC LINE3	0000 ⋮ 0003 ⋮ 0015 0016 ⋮ 0031 0032	7L ⋮ 10L ⋮ 22L 320L ⋮ 335L 623L	For selecting the additional line where the signals are to be recorded. **<Note>** This menu item is not displayed when setting "1" has been selected as the additional line mode.
03	REC LINE4	0000 ⋮ 0015 0016 ⋮ 0019 ⋮ 0031 0032	7L ⋮ 22L 320L ⋮ 323L ⋮ 335L 623L	For selecting the additional line where the signals are to be recorded. **<Note>** This menu item is not displayed when setting "1" has been selected as the additional line mode.

The underline on the setting item denotes the initial setting.

<V BLANK> (continued)

Item		Setting		Description
No.	Superimposed display	No.	Superimposed display	
802	TELETEXT SEL	0000 0001	MOJI NABTS	For selecting the type of teletext signals to be recorded. 0: MOJI system 1: NABTS system **<Note>** This setup menu item is not displayed in the 625 mode.
803	TELETEXT DET	0000 0001 0002	OFF AUTO MANU	For selecting the method used to detect the lines in which the teletext signals are to be recorded. 0: The teletext signals are not recorded. 1: The teletext signals are automatically detected and recorded. 2: The lines in which the teletext signals are to be recorded are selected and set. **<Notes>** • The number of lines in which the teletext signals can be recorded depends on the number of recording lines which was entered as the setup menu No. 800 (ADD LINE 25) or No. 801 (ADD LINE 50) setting. [See "Number of lines which can be set for teletext."] • When setting "2 (MANU)" is selected and the STOP button is pressed, operation transfers to the sub-screen, and the number of recording lines can be selected. To return from the sub-screen, press the STOP button again.
Sub-screen (525 mode)				
00 : : : : : : : : : : : : 12	REC LINE1 : : : : : : : : : : : : REC LINE13	0000 0001 0002 0003 0004 0005 0006 0007 0008 0009 0010 0011 0012 0013	OFF 10&273 11&274 12&275 13&276 14&277 15&278 16&279 17&280 18&281 19&282 20&283 21&284 22	For selecting the lines in which the teletext signals are to be recorded. Factory mode settings REC LINE1: OFF REC LINE2: OFF REC LINE3: OFF REC LINE4: OFF REC LINE5: OFF REC LINE6: OFF REC LINE7: OFF REC LINE8: OFF REC LINE9: OFF REC LINE10: OFF REC LINE11: OFF REC LINE12: OFF REC LINE13: OFF
Sub-screen (625 mode)				
00 : : : : : : : : : : : : : : : 14	REC LINE1 : : : : : : : : : : : : : : : REC LINE15	0000 0001 0002 0003 0004 0005 0006 0007 0008 0009 0010 0011 0012 0013 0014 0015 0016	OFF 7&320 8&321 9&322 10&323 11&324 12&325 13&326 14&327 15&328 16&329 17&330 18&331 19&332 20&333 21&334 22	For selecting the lines in which the teletext signals are to be recorded. Factory mode settings REC LINE1: OFF REC LINE2: OFF REC LINE3: OFF REC LINE4: OFF REC LINE5: OFF REC LINE6: OFF REC LINE7: OFF REC LINE8: OFF REC LINE9: OFF REC LINE10: OFF REC LINE11: OFF REC LINE12: OFF REC LINE13: OFF REC LINE14: OFF REC LINE15: OFF

The underline on the setting item denotes the initial setting.

<V BLANK> (continued)

Item		Setting		Description
No.	Superimposed display	No.	Superimposed display	
804	BLANK LINE	0000 0001 0002	BLANK THRU MANU	This turns the blanking ON or OFF in the vertical blanking period of the video output signals. 0: Blanking is effected forcibly for all lines. 1: No blanking is effected for any of the lines. 2: Blanking ON or OFF is selected for each line. **<Note>** When setting "2 (MANU)" is selected and the STOP button is pressed, operation transfers to the sub-screen, and ON or OFF can be selected for each line. To return from the sub-screen, press the STOP button again.
Sub-screen (525 mode)				
00	LINE 10&273	0000 0001	BLANK THRU	0: Blanking is forcibly effected. 1: No blanking is effected.
01	LINE 11&274	0000 0001	BLANK THRU	0: Blanking is forcibly effected. 1: No blanking is effected.
02	LINE 12&275	0000 0001	BLANK THRU	0: Blanking is forcibly effected. 1: No blanking is effected.
03	LINE 13&276	0000 0001	BLANK THRU	0: Blanking is forcibly effected. 1: No blanking is effected.
04	LINE 14&277	0000 0001	BLANK THRU	0: Blanking is forcibly effected. 1: No blanking is effected.
05	LINE 15&278	0000 0001	BLANK THRU	0: Blanking is forcibly effected. 1: No blanking is effected.
06	LINE 16&279	0000 0001	BLANK THRU	0: Blanking is forcibly effected. 1: No blanking is effected.
07	LINE 17&280	0000 0001	BLANK THRU	0: Blanking is forcibly effected. 1: No blanking is effected.
08	LINE 18&281	0000 0001	BLANK THRU	0: Blanking is forcibly effected. 1: No blanking is effected.
09	LINE 19&282	0000 0001	BLANK THRU	0: Blanking is forcibly effected. 1: No blanking is effected.
10	LINE 20&283	0000 0001	BLANK THRU	0: Blanking is forcibly effected. 1: No blanking is effected.
11	LINE 21&284	0000 0001	BLANK THRU	0: Blanking is forcibly effected. 1: No blanking is effected.

The underline on the setting item denotes the initial setting.

<V BLANK> (continued)

Item		Setting		Description
No.	Superimposed display	No.	Superimposed display	
Sub-screen (625 mode)				
00	LINE 7&320	0000 0001	BLANK THRU	0: Blanking is forcibly effected. 1: No blanking is effected.
01	LINE 8&321	0000 0001	BLANK THRU	0: Blanking is forcibly effected. 1: No blanking is effected.
02	LINE 9&322	0000 0001	BLANK THRU	0: Blanking is forcibly effected. 1: No blanking is effected.
03	LINE 10&323	0000 0001	BLANK THRU	0: Blanking is forcibly effected. 1: No blanking is effected.
04	LINE 11&324	0000 0001	BLANK THRU	0: Blanking is forcibly effected. 1: No blanking is effected.
05	LINE 12&325	0000 0001	BLANK THRU	0: Blanking is forcibly effected. 1: No blanking is effected.
06	LINE 13&326	0000 0001	BLANK THRU	0: Blanking is forcibly effected. 1: No blanking is effected.
07	LINE 14&327	0000 0001	BLANK THRU	0: Blanking is forcibly effected. 1: No blanking is effected.
08	LINE 15&328	0000 0001	BLANK THRU	0: Blanking is forcibly effected. 1: No blanking is effected.
09	LINE 16&329	0000 0001	BLANK THRU	0: Blanking is forcibly effected. 1: No blanking is effected.
10	LINE 17&330	0000 0001	BLANK THRU	0: Blanking is forcibly effected. 1: No blanking is effected.
11	LINE 18&331	0000 0001	BLANK THRU	0: Blanking is forcibly effected. 1: No blanking is effected.
12	LINE 19&332	0000 0001	BLANK THRU	0: Blanking is forcibly effected. 1: No blanking is effected.
13	LINE 20&333	0000 0001	BLANK THRU	0: Blanking is forcibly effected. 1: No blanking is effected.
14	LINE 21&334	0000 0001	BLANK THRU	0: Blanking is forcibly effected. 1: No blanking is effected.
15	LINE 22&335	0000 0001	BLANK THRU	0: Blanking is forcibly effected. 1: No blanking is effected.

The underline on the setting item denotes the initial setting.

USER menu

<MENU>

Item		Setting		Description
No.	Superimposed display	No.	Superimposed display	
A00	LOAD	0000 0001 0002 0003	USER2 USER3 USER4 USER5	This selects the user file whose contents will be loaded into USER1. 0: The USER2 file contents are loaded. 1: The USER3 file contents are loaded. 2: The USER4 file contents are loaded. 3: The USER5 file contents are loaded. **<Note>** When the SET button is pressed after loading, the setting will be stored in the memory. When the MENU button is pressed, the setting will not be changed.
A01	SAVE	0000 0001 0002 0003 0004	USER2 USER3 USER4 USER5 LOCKED	This selects the user file into which the USER1 settings will be saved. 0: The settings are saved in USER2. 1: The settings are saved in USER3. 2: The settings are saved in USER4. 3: The settings are saved in USER5. 4: This display appears when all the user files are in the change prohibit status. **<Notes>** • User files whose status have been set to change prohibit cannot be selected. • When all the user files are in the change prohibit status, the "LOCKED" display appears and the contents cannot be saved.
A02	P.ON LOAD	0000 0001 0002 0003 0004	OFF USER2 USER3 USER4 USER5	This loads the contents of the selected user file into USER1 and it starts operation with the USER1 settings when the power is turned on. 0: Operation is started with the settings of the previously set user file. 1: The contents of USER2 are loaded into USER1 and operation is started with the USER1 settings. 2: The contents of USER3 are loaded into USER1 and operation is started with the USER1 settings. 3: The contents of USER4 are loaded into USER1 and operation is started with the USER1 settings. 4: The contents of USER5 are loaded into USER1 and operation is started with the USER1 settings.
A03	MENU LOCK	0000 0001	OFF ON	This selects whether to set or release the user file (USER2 – USER5) lock mode. 0: The lock is released (changes can be made). 1: The lock is set (changes are prohibited). **<Note>** The lock cannot be set for USER1.

The underline on the setting item denotes the initial setting.

<Notes>

- No. A00 (LOAD), No. A01 (SAVE) and No. A02 (P.ON LOAD) are the menu items which can be set only for USER1. They are not displayed with the USER2 – USER5 files.
- No. A03 (MENU LOCK) is the menu item which can be set only for the USER2 – USER5 files. It is not displayed with USER1.

17. Circuit board layout drawing

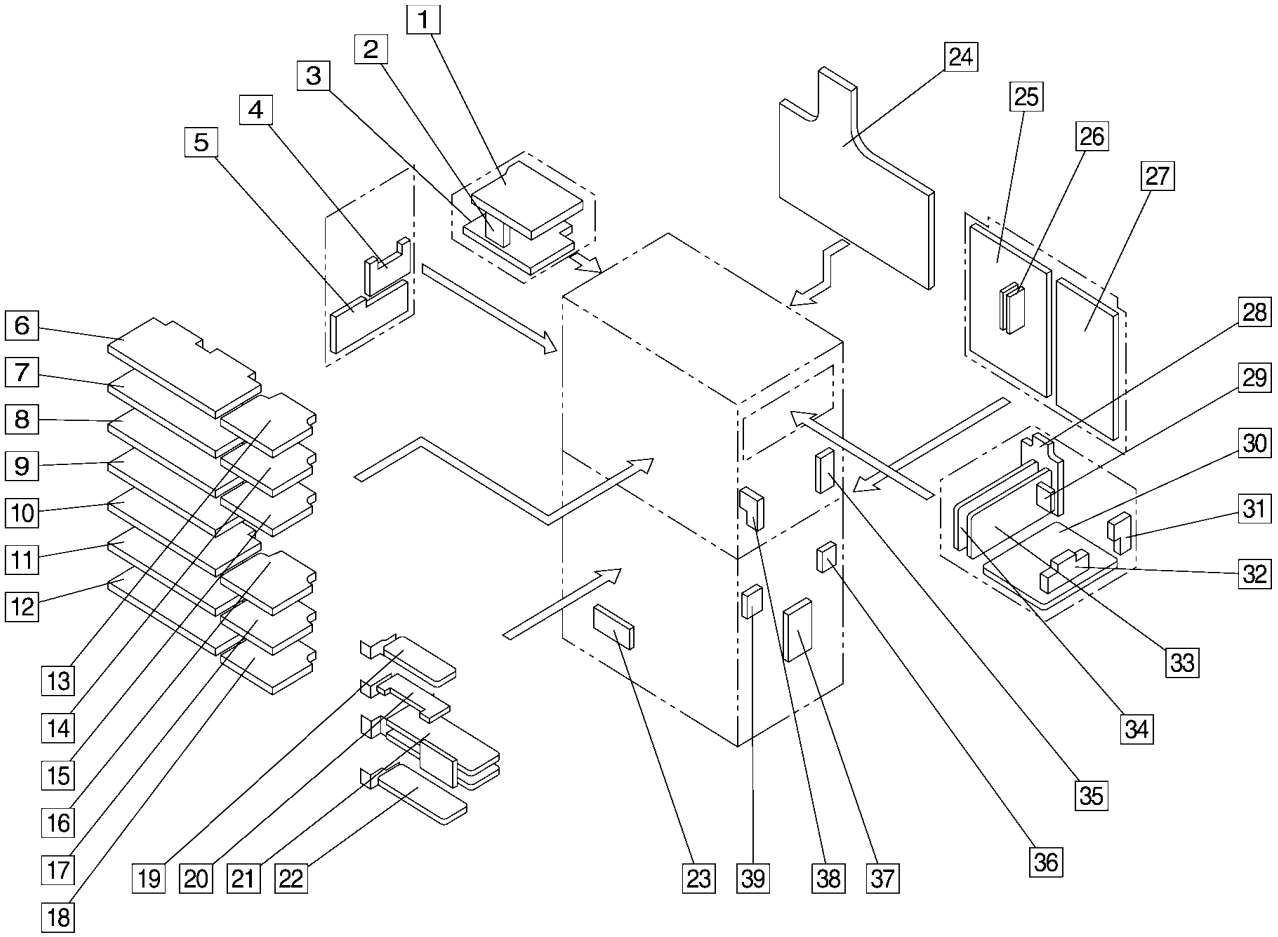

No.	Circuit Board Name	No.	Circuit Board Name
1	POWER 2 P.C.BOARD	19	SVGA BOARD
2	POWER INT P.C.BOARD	20	SCSI BOARD
3	POWER 1 P.C.BOARD	21	CAPUTER BOARD
4	VIDEO REAR P.C.BOARD	22	REMOTE I/O P.C.BOARD
5	AUDIO REAR P.C.BOARD	23	PC FAN I/F P.C.BOARD
6	F1: SERVO P.C.BOARD	24	VTR MOTHER P.C.BOARD
7	F2: SYSCON P.C.BOARD	25	CPU BOARD
8	F3: AJ-YAC960P (OPTION)	26	SIMM BOARD
9	F4: REC PB P.C.BOARD	27	SCSI MOTHER
10	F5: V OUT P.C.BOARD	28	RF MOTHER P.C.BOARD
10	F5SUB: 422/844 DA P.C.BOARD	29	AC HEAD I/F P.C.BOARD
11	F6: A-PROC P.C.BOARD	30	MECHA I/F P.C.BOARD
11	F6SUB: AJOG P.C.BOARD	31	FRONT LED P.C.BOARD
12	F7: V IN P.C.BOARD	32	EJECT P.C.BOARD
13	H1: EQ1 P.C.BOARD	33	HEAD BUFFER 1 P.C.BOARD
14	H2: EQ2 P.C.BOARD	34	HEAD BUFFER 2 P.C.BOARD
15	H3: EQ MAIN P.C.BOARD	35	MAIN POWER LED P.C.BOARD
16	H5: A MONI MIC P.C.BOARD	36	PC POWER SW P.C.BOARD
17	H6: A DA P.C.BOARD	37	FAN I/F P.C.BOARD
18	H7: A AD P.C.BOARD	38	HP-MIC-JACK P.C.BOARD
		39	RESET P.C.BOARD

MEMO

SECTION 3

DISASSEMBLY PROCEDURES

CONTENTS

1. Removal of the Mechanism Unit DIS-1
2. Removal of the Side Panels (same method for both sides) DIS-2
3. Removal of the P.C.B.s (VTR section) DIS-2
4. Removal of the Top panel DIS-3
5. Removal of the Power Supply Unit (VTR section) DIS-3
6. Exchange of the AV Hard Disk DIS-4
7. Exchange of the SYS Hard Disk DIS-5
8. Exchange of the CD-ROM Drive DIS-5
9. Exchange of the FD Drive DIS-6
10. Removal of the Fan Motor (PC section) Unit DIS-6
11. Removal of the Cards (PC section) DIS-6
12. Exchange of the Power Supply Unit (PC section) DIS-7

2. Disassembly Procedures

1. Removal of the Mechanism Unit

1. Loosen the lock screw (A) on the Front Panel, and pull the Mechanism Unit to front.

Figure D1

2. Unscrew the 4 screws (B) (each 2 screws on both sides), and remove the connector P1.

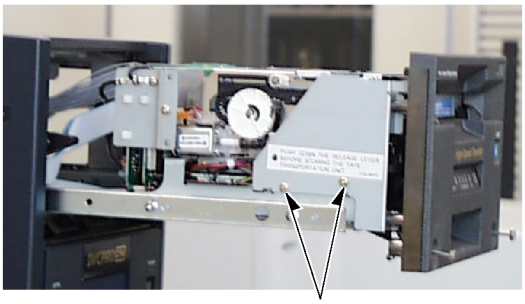

Figure D2

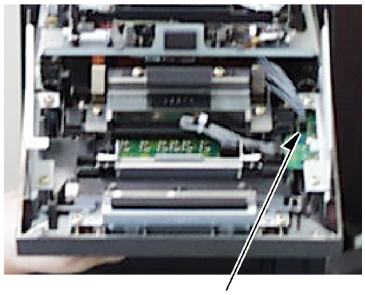

Figure D3

3. Unscrew the 2 screws (C) on the bottom of the Mechanism Unit. Loosen 2 screws (D) and remove the Bottom Cover.

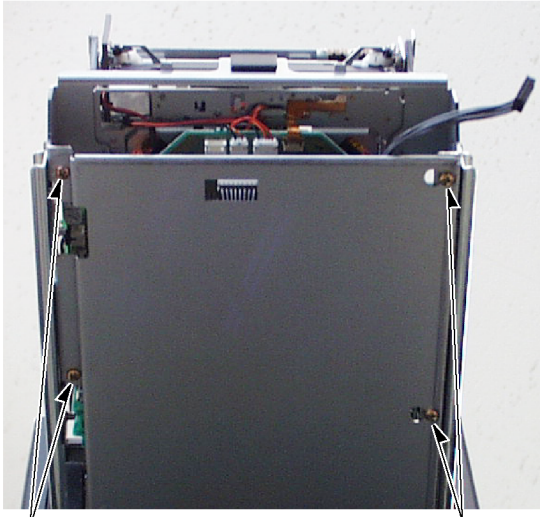

Figure D4

4. Disconnect the 4 connectors P2, P3, P4 and P16 on the MECHA I/F P.C.B..

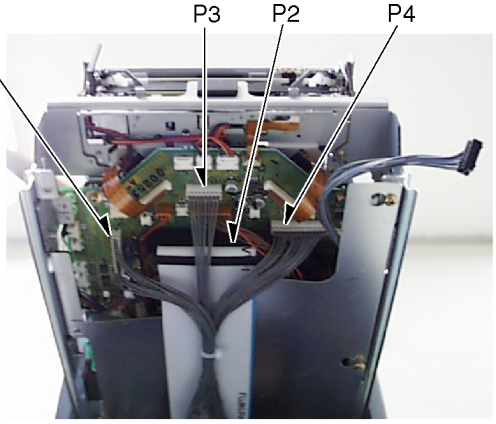

Figure D5

5. Disconnect the 6 connectors P5003 to P5008 on the HEAD BUFF 1 P.C.B..

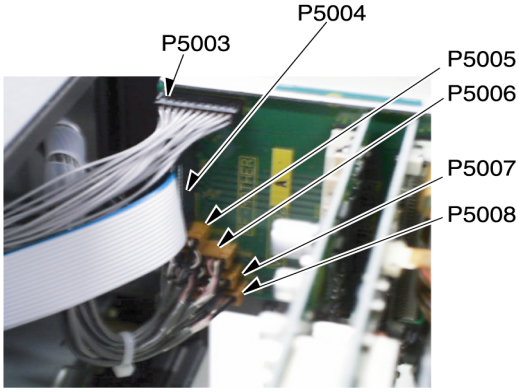

Figure D6

6. Disconnect the connector P2 on the A/C HEAD 1/F P.C.B..
(This P.C.B. is on the left side of the Mechanism Unit.)

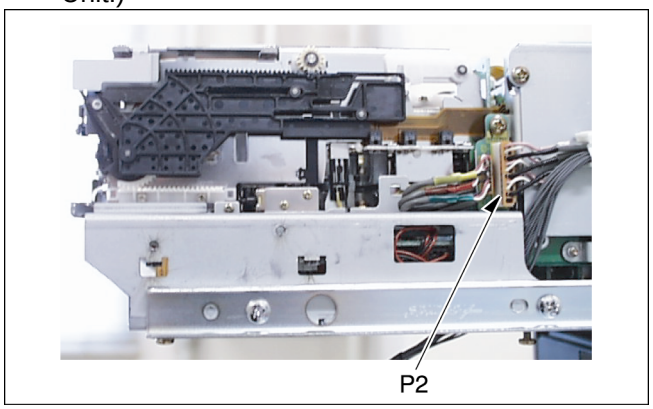

Figure D7

7. Turn the Emergency Eject Gear on the right side of the Mechanism Unit by the screw driver. Move the Front Loading Position that you can see the 2 screws (E). Unscrew the 3 screws (E), and lift up the Mechanism Unit slowly.

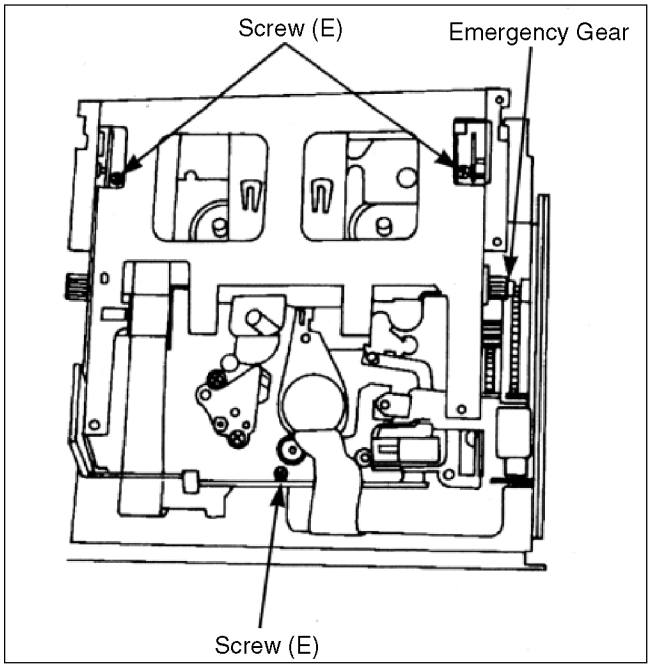

Figure D8

2. Removal of the Side Panels (same method for both sides)

1. Unscrew the 6 screws (F) and remove the Side Panel. (Figure. D9 shows the right side panel.)

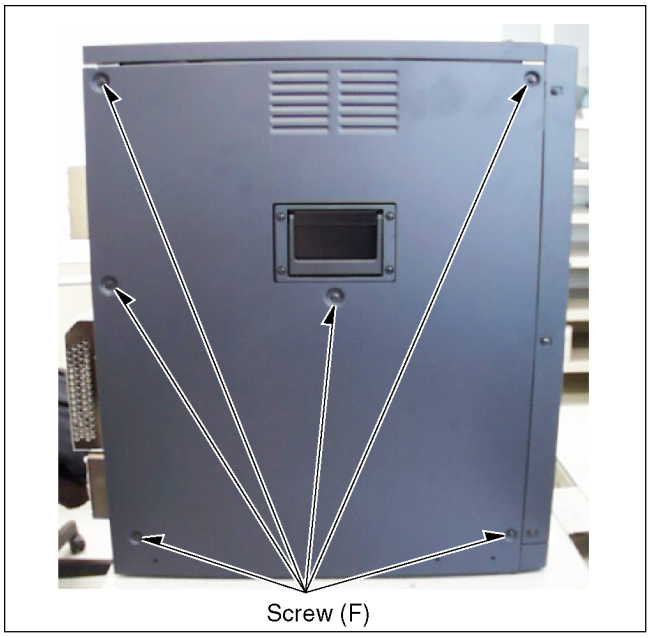

Figure D9

3. Removal of the P.C.B.s (VTR section)

1. Remove the right side panel.
2. Unscrew the 4 screws (G) on the Handle Panel of the right side, and remove it.

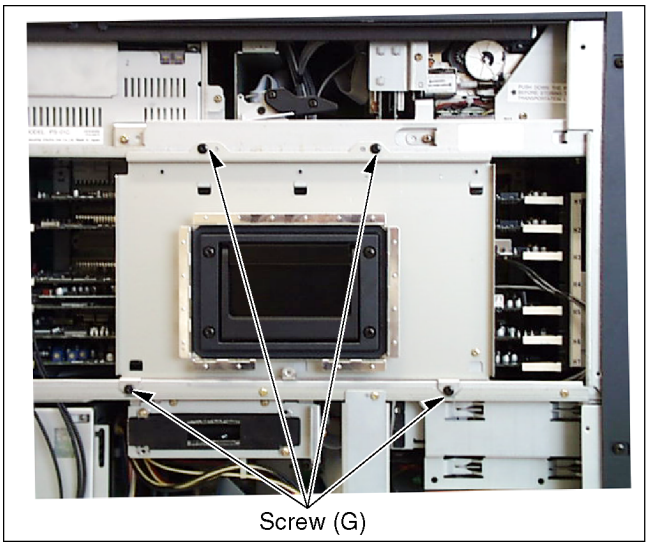

Figure D10

3. Slowly pull out the necessary P.C.B.s.

4. Removal of the Top panel.

1. Unscrew the 4 screws (H).
2. Remove the Top panel.

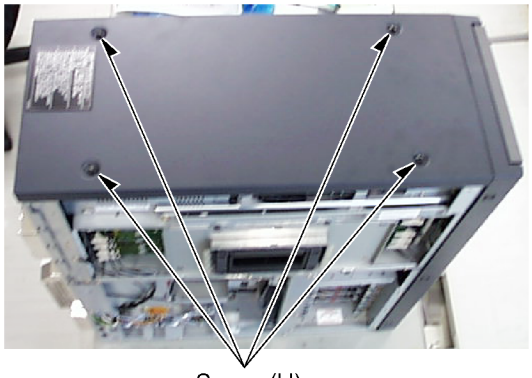

Figure D11

5. Removal of the Power Supply Unit (VTR section)

1. Remove the both of side panels.
2. Unscrew the screw (H) and 6 screws (J), and remove the Rear Jack Panel.

Figure D12

3. Disconnect the connector (K1) to connector (K5).

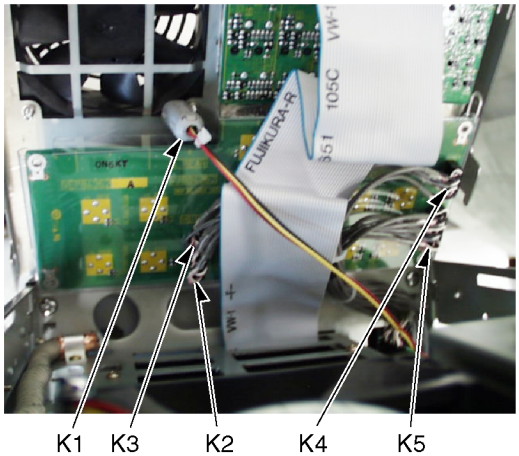

Figure D13

4. Remove the 2 screw (L).

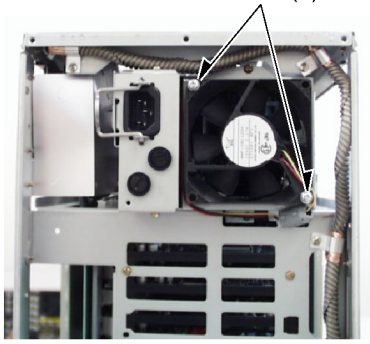

Figure D14

5. Remove a screw (M) on the right side of the unit.

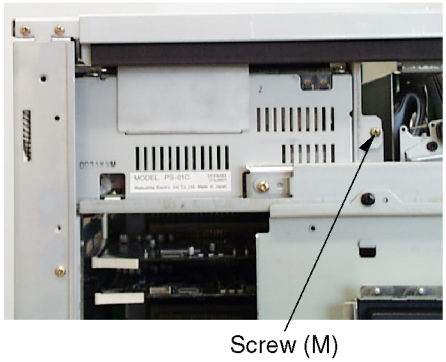

Figure D15

6. Disconnect the 5 connectors (P1011, P1012, P1013,P1102, P1103) on the left side of the unit. Slowly pull out the Power Unit from the rear side of the unit.

Figure D16

For the following item 5 and 6, please be noticed as follows

Handling Precaution for Hard Disk

* Be careful with handling in the circumstance for static electricity.
* Be careful not to give shock and vibration to Hard Disk.
* Be careful not to short the circuit.

6. Exchange of the AV Hard Disk

1. Remove the right side panel.
2. Unscrew the 2 screws (N) of the Hard Disk which you need exchange.
3. Slowly pull out the Hard Disk.

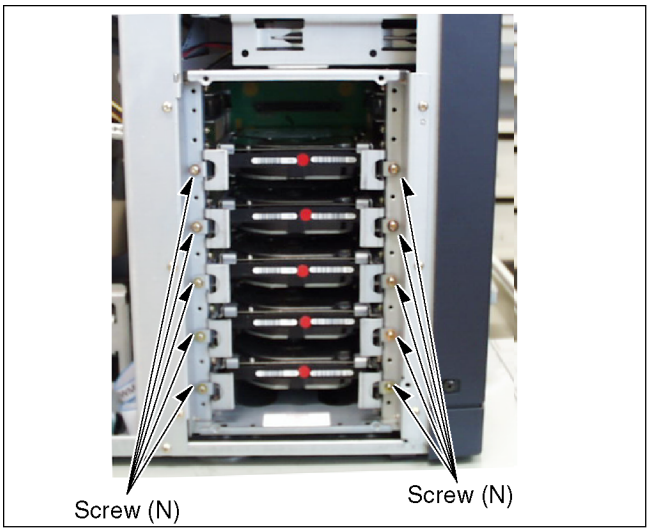

Figure D17

4. Unscrew the 2 screws (V), remove the Hard Disk Hold Angle.

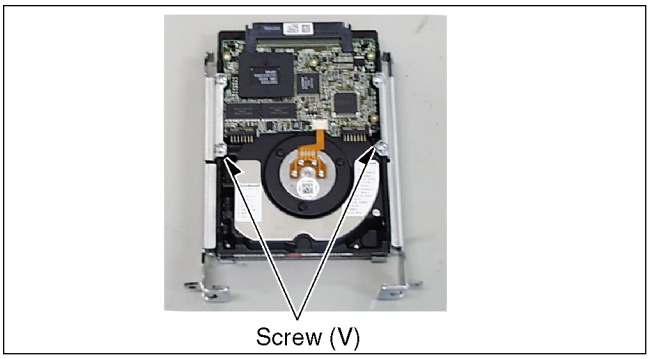

Figure D18

AV Hard Disk Setting

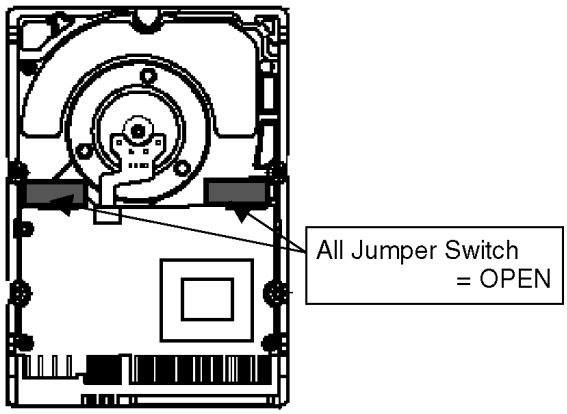

7. Exchange of the SYS Hard Disk

1. Remove the right side panel.
2. Unscrew the 2 screws (0).
3. Lift up the SYS Hard Disk a little, and pull out toward you slowly.

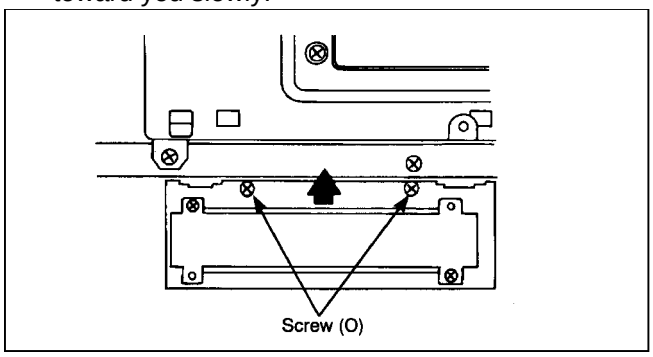

Figure D19

4. Disconnect the EIDE cable connector and the Power connector on the rear side of the Hard Disk, and take the Hard Disk out of the unit.

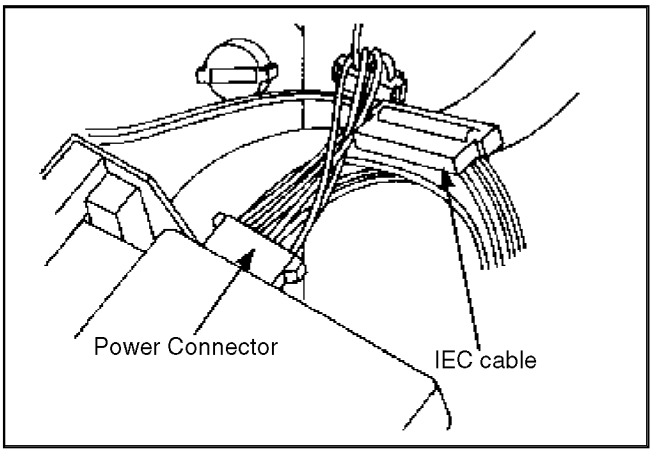

Figure D20

5. Unscrew the 2 screws (P) on the Hard Disk hold angle and remove the Hard Disk hold angle.

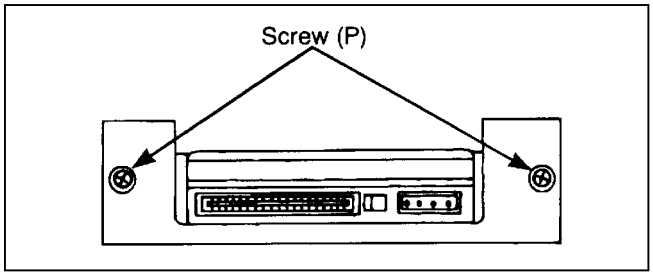

Figure D21

6. Pull out the Hard Disk slowly, and remove it.
   (* When you exchange the Hard Disk, please use the mounting bracket which was just removed Hard Disk's.)
7. For installation of the Hard Disk, insert the pin on the Hard Disk frame to the hole on the unit frame.

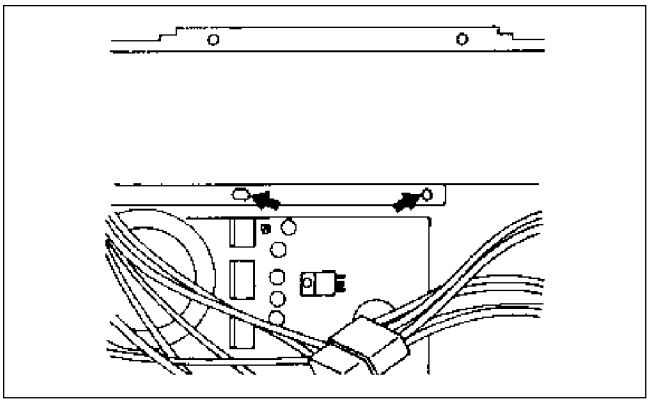

Figure D22

Caution for Installation

Master setting jumper pins ware installed on front of the Disk as shown below. When install the new Hard Disk, reinstall the master setting jumper pins as specify from old Hard Disk to new one.

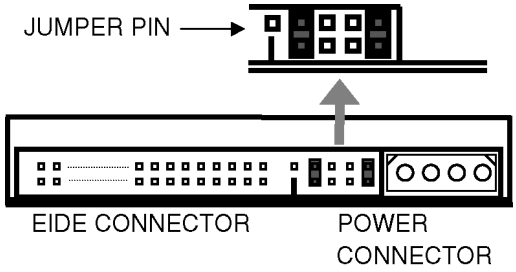

Figure D23

8. Exchange of the CD-ROM Drive

1. Unscrew the 2 screws (Q), and pull out the CD-ROM Drive slowly.
2. Disconnect the EIDE connector and Power connector on rear of the CD-ROM Drive, and remove the CD-ROM Drive.

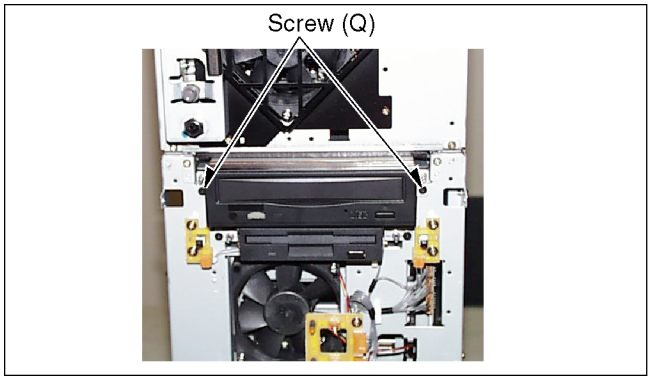

Figure D24

Caution for Installation

Slave setting jumper pins ware installed on front of The Disk as shown below. When install the new CD

-ROM Drive, reinstall the slave setting jumper pins as specify from old CD-ROM Drive to new one.

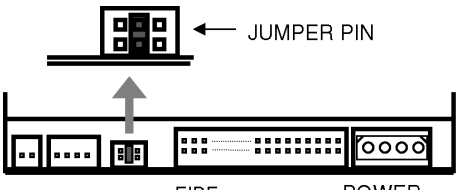

Figure D25

9. Exchange of the FD Drive

1. Unscrew the 2 screws (R), and pull out the FD Drive slowly.
2. Disconnect the EIDE connector and Power connector on rear of the FD Drive, and remove the FD Drive.

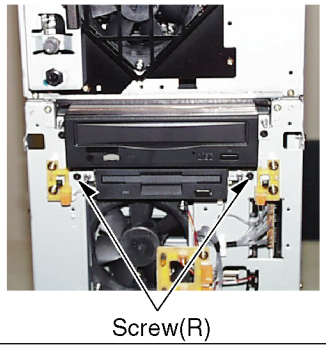

Figure D26

10. Removal of the Fan Motor (PC section)

1. Disconnect the connector (P1) and connector (P4).
2. Unscrew the 2 screw (I1), 2 screw (I2), and 2 screws (I3), and remove the Fan Motor of the PC section.

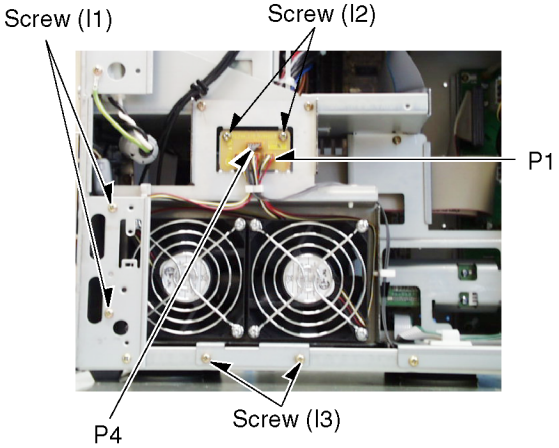

Figure D27

11. Removal of the Cards (PC section)

1. Remove the right side panel.
2. Loosen the 3 screws (S) on the card hold angle, and shift forward a little. Disconnect the connector J5 on the Remote I/O card, then remove the hold angle.

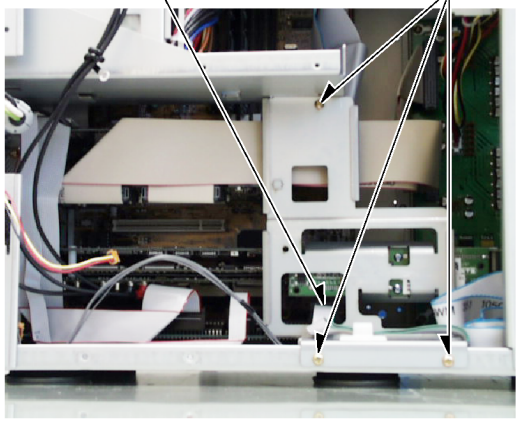

Figure D28

3. Unscrew the screw (T) on the card you want, and pull out the card slowly.

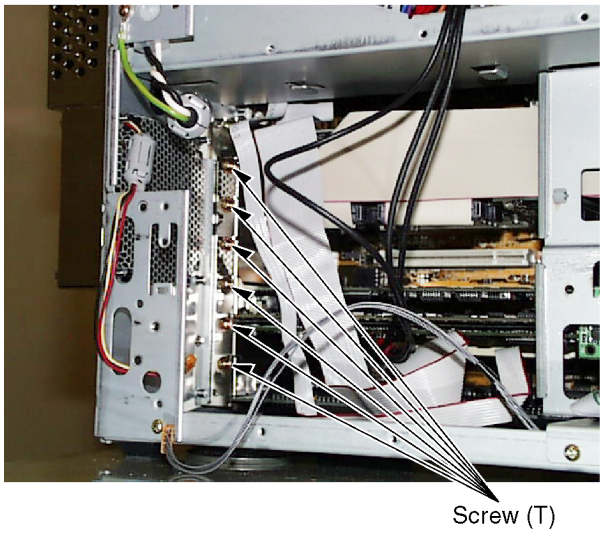

Figure D29

12. Exchange of the Power Supply Unit (PC section)

1. Remove the right side panel. Unscrew the 4screw (U) on the Power Fan Cover of rear side of the unit.
2. Unscrew the 4screw (U) on the Power Fan Cover of rear side of the unit. Remove the Fan Cover, and pull out the AC Plug.

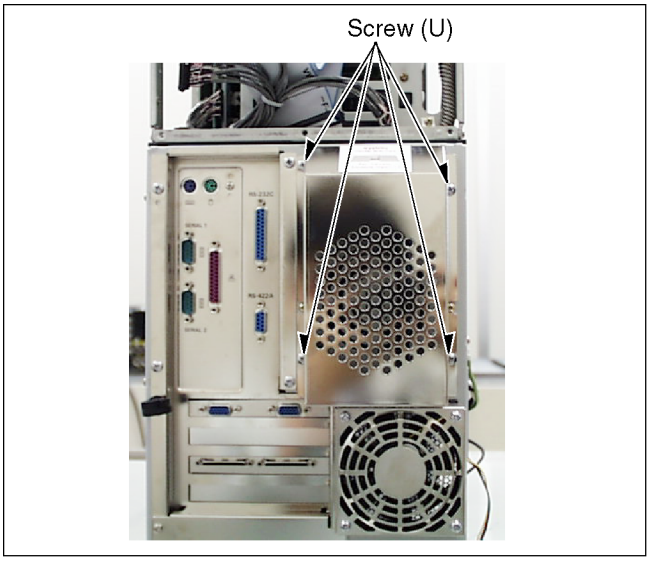

Figure D30

3. Disconnect the Power connectors P2, P3, P4, P6 and P7 inside of the unit.
4. Pull out the Power Supply Unit direction of rear side of the unit. Disconnect the connector (ATXPW) on the CPU Board, and remove the Power Supply Unit.

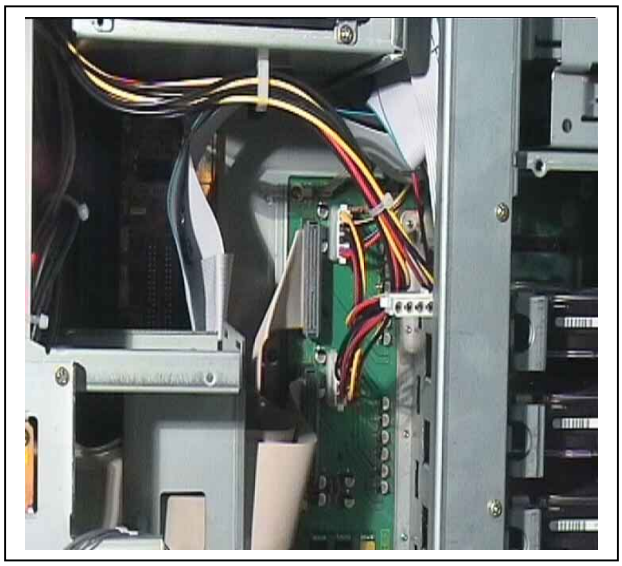

Confirm the connection between each power connectors and distinations as shown below.

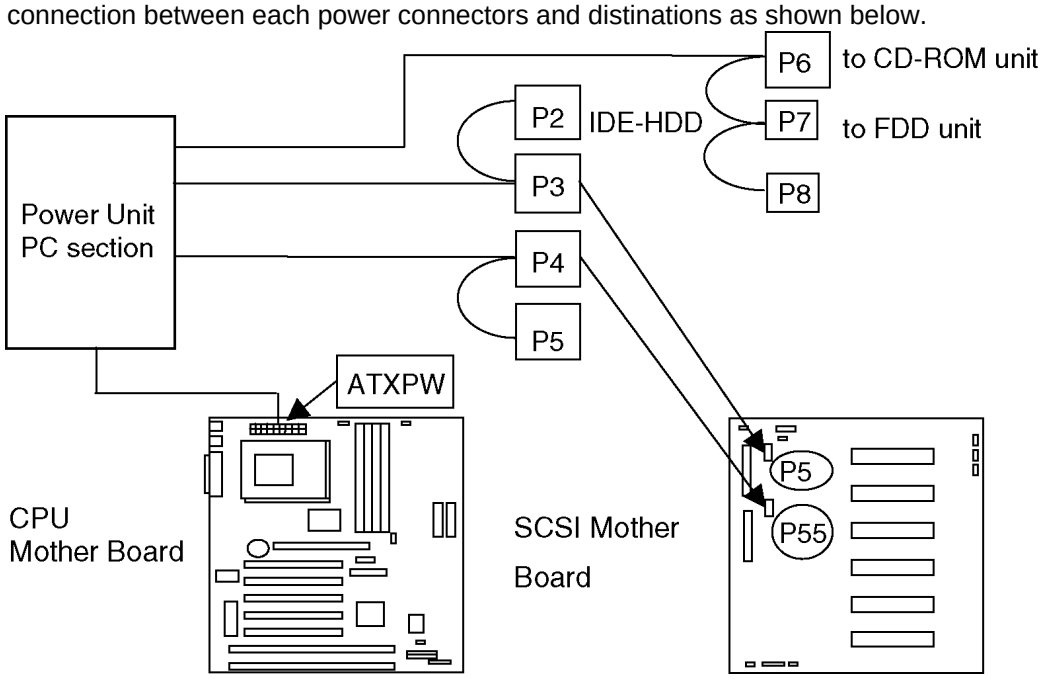

Figure D31